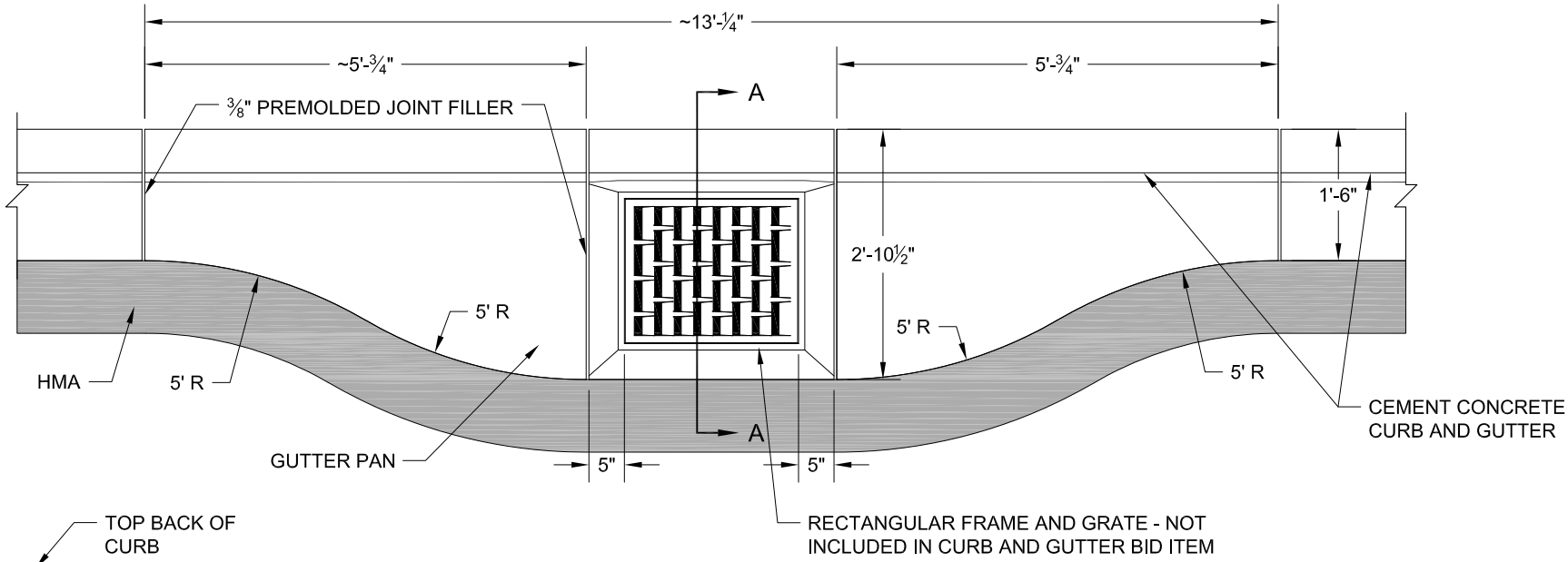

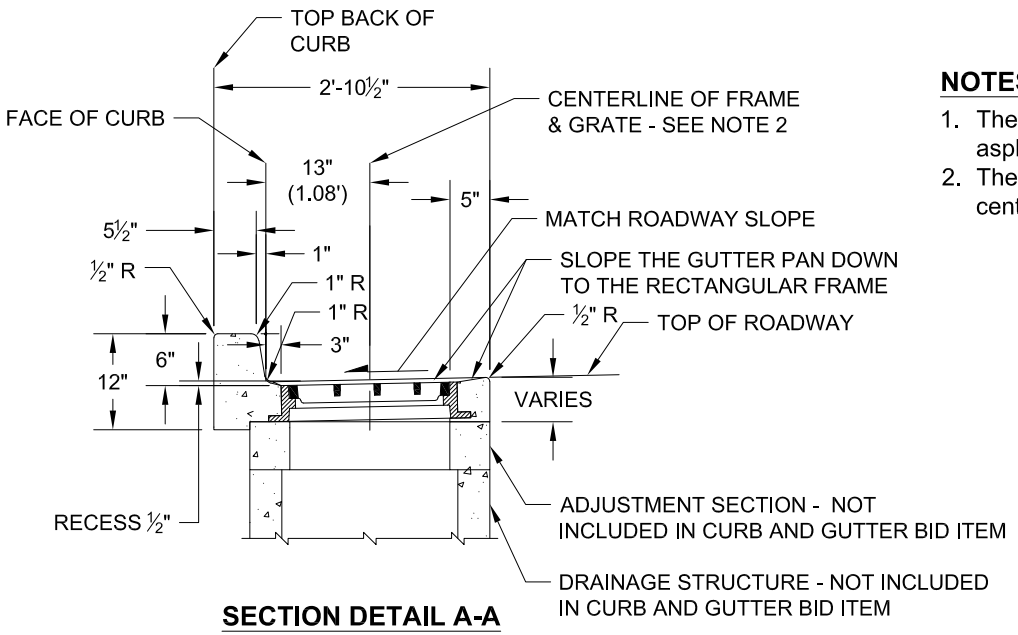

SECTION DETAIL A-A

NOTES:

1. The intent of this design is to facilitate the compaction of hot mix asphalt pavement adjacent to a drainage structure.
2. The centerline of the drainage structure may differ from the centerline of the frame and grate.

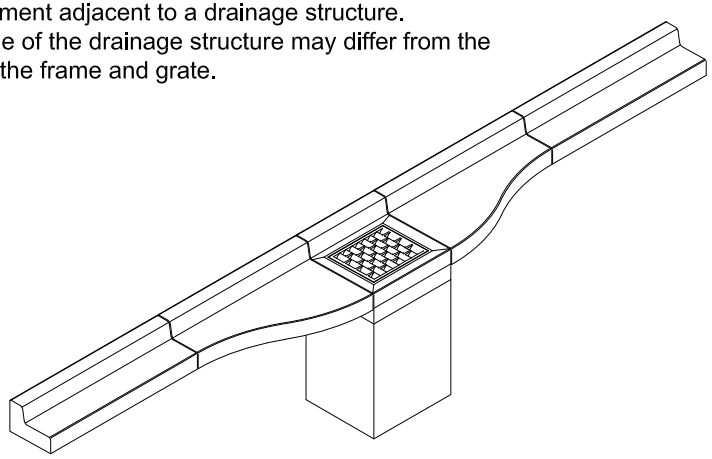

RVDR PUBLIC WORKS TACOMA POWER	REVIEWED BY EW ENVIRONMENTAL SERVICES TS TACOMA WATER	KURTIS DEAN KINGSOLVER STATE OF WASHINGTON 31229 REGISTERED PROFESSIONAL ENGINEER	APPROVED FOR PUBLICATION kurtis kingsolver 04/19/2021 CITY ENGINEER DATE

CITY OF TACOMA

CEMENT CONCRETE CURB AND GUTTER PAN

STANDARD PLAN NO. SU-30