TREE SIZE:

Trees are categorized as small, medium or large based the canopy factor, which takes into account the trees mature height, crown spread and growth ratE. The following formula shall be used to determine the canopy factor:

(MATURE HEIGHT IN FEET) X (MATURE WIDTH IN FEET) X (GROWTH RATE) X (0.01) = CANOPY FACTOR

The growth rate number is 1 for slow growing trees, 2 for moderately growing trees and 3 for fast growing trees.

Tree size categories are as follows:

A. LARGE TREES = Canopy factor greater than 90
B. MEDIUM TREES = Canopy factor from 40-90
C. SMALL TREES = Canopy factor less than 40

SMALL TREES

24 SQUARE FEET MIN
UNPAVED PLANTING AREA

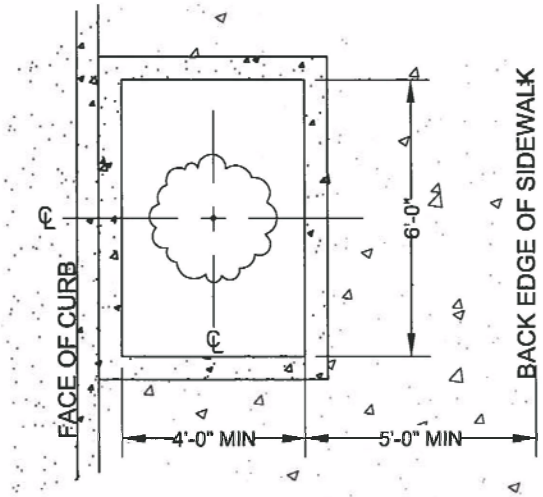

MEDIUM TREES

40 SQUARE FEET MIN
UNPAVED PLANTING AREA

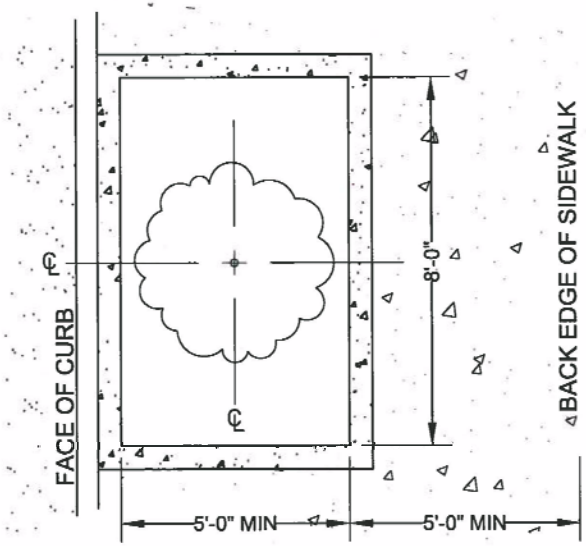

LARGE TREES

60 SQUARE FEET MIN
UNPAVED PLANTING AREA

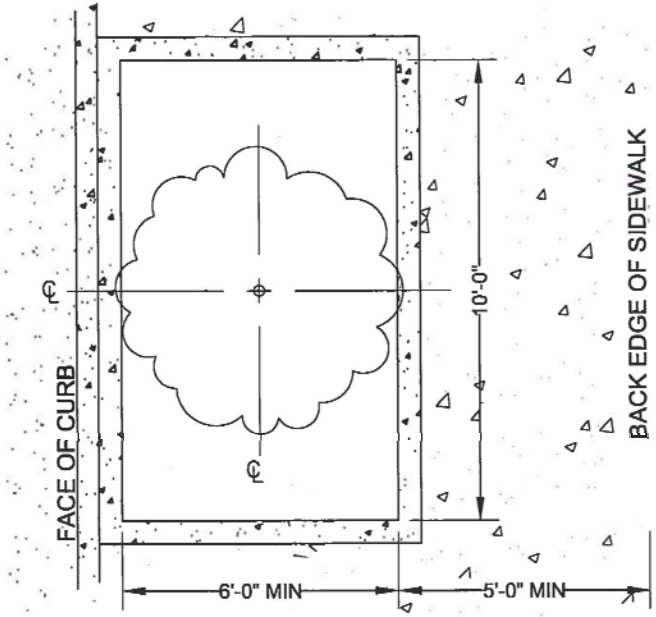

CITY OF TACOMA DEPARTMENT OF PUBLIC WORKS	APPROVED FOR PUBLICATION CITY ENGINEER 7/6/18 DATE	TREE WELL DIMENSION STANDARD PLAN NO. LS-03