Agenda

Landmarks Preservation Commission
Planning and Development Services Department

Date: March 13, 2019
Location: 747 Market, Tacoma Municipal Bldg, Conference **Room 243**
Time: 5:30 p.m.

1. ROLL CALL

2. CONSENT AGENDA
A. Excusal of Absences
B. Administrative Review:
- 616 North L Street—Windows

3. DESIGN REVIEW – OLD BUSINESS

A. Dickman Mill Park Expansion and Head Saw (Individual Landmark) *Design Update*	Claire Keller-Scholz, MetroParks	10 min
B. 818 North Cushman (North Slope Historic District) *Window replacement*	Jaime Broersma, Owner	10 min

4. PRESERVATION PLANNING/BOARD BUSINESS

A. Old City Hall Design Guidelines	Staff	15 min

5. CHAIR COMMENTS

Next Regular Meeting: March 27, 2019, 747 Market Street, Tacoma Municipal Bldg., Rm. 243 5:30 p.m.

This agenda is for public notice purposes only. Complete applications are included in the Landmarks Preservation Commission records available to the public BY APPOINTMENT at 747 Market Street, Floor 3, or online at www.cityoftacoma.org/lpc-agenda. All meetings of the Landmarks Preservation Commission are open to the public. Oral and/or written comments are welcome.

The City of Tacoma does not discriminate on the basis of handicap in any of its programs or services. To request this information in an alternative format or to request a reasonable accommodation, please contact the Planning and Development Services Department at (253) 591-5056 (voice) or (253) 591-5820 (TTY).

Landmarks Preservation Commission
Planning & Development Services Department

STAFF REPORT March 13, 2019

DESIGN REVIEW

OLD BUSINESS

AGENDA ITEM 3A: Dickman Mill Park Expansion and Head Saw (Individual Landmark)

Claire Keller-Scholz, MetroParks

On June 13, 2018, the Landmarks Preservation Commission approved returning the historic Dickman Mill Headsaw to its original location in Dickman Mill Park. The headsaw is a City of Tacoma Landmark. The headsaw, carriage, and two smaller associated artifacts will be returned to the site within the project area. The project also includes park improvements such as a new deck, overwater walkway, interpretive signage, artwork, lighting of the headsaw and carriage, and seating.

At that time, Landmarks Preservation Commission deferred approval for the placement of the second, lower wheel pending alternative design or curation options. The Commission also requested an inventory and documentation for the smaller associated artifacts that will not be displayed in the park be submitted.

Since that time, the design of the park renovations has been refined, due in part to restrictions around wetland mitigation, the proposed options of siting the lower wheel in the park have been discarded. Instead, an off-site care plan has been developed for the lower wheel. An inventory and schematic drawings of all artifact components are submitted per the Commission's request.

ACTION REQUESTED
Final approval of the final design and curation/storage plan.

STANDARDS
Secretary of the Interior's Standards for the Rehabilitation of Historic Buildings

1. A property shall be used for its historic purpose or be placed in a new use that requires minimal change to the defining characteristics of the building and its site and environment.
2. The historic character of a property shall be retained and preserved. The removal of historic materials or alteration of features and spaces that characterize a property shall be avoided.
3. Each property shall be recognized as a physical record of its time, place, and use. Changes that create a false sense of historical development, such as adding conjectural features or architectural elements from other buildings, shall not be undertaken.

ANALYSIS
1. The artifacts are individually listed City Landmarks, and, as such, is subject to review by the Landmarks Preservation Commission pursuant to TMC 13.05.047 for modifications.
2. The park property is not on the Tacoma Register of Historic Places, only the Dickman Mill Headsaw is an individual landmark.
3. The headsaw and corresponding artifacts will be prepared for public display, which requires minimal changes.
4. The historic property is being retained and preserved and relocated to its original location in the Dickman Mill Park.
5. The property is being recognized as a physical record of its time interpretive signage, artwork, lighting and site-specific salvaged materials will be utilized to convey the history.

6. The applicant has provided the additional requested materials.

RECOMMENDATION
Staff recommends approval of the application.

Recommended language for approval:
I move that the Landmarks Preservation Commission approve the application, as submitted.

AGENDA ITEM 3B: 818 North Cushman Avenue (North Slope Historic District)

Jaime Broersma, Owner

BACKGROUND
Built in 1925, this is a contributing property in the North Slope Historic District. The owner is proposing to replace 11 existing windows, four of which are non-historic vinyl or aluminum. The remaining seven windows (including 2 sets of paired double hung windows) are original.

The owner requested a bid from Legacy Renovations (attached) for restoration of the original windows, which exceeded the owner's budget and desired timeframe. Some of the windows are painted shut and do not function; they also contain lead paint. The owner is not able to complete the restoration work herself, therefore, she is requesting to replace them with Milgard Essence windows, which have wood interiors and fiberglass exteriors. The original wood trim will be retained and repaired in-kind as necessary.

On February 13, 2018, the Landmarks Preservation Commission voted to approve the replacement of the non-historic windows, but deferred voting on the replacement of the historic windows pending additional bids for unsticking and painting the original windows. The applicant is currently gathering this information.

ACTION REQUESTED
Approval of the replacement of the original windows with Milgard Essence clad windows.

STANDARDS
Design Guidelines for the North Slope Special Review District: Windows

1. **Preserve Existing Historic Windows**. Existing historic windows in good working order should be maintained on historic homes in the district. The existing wood windows exhibit craftsmanship and carpentry methods in use at the time that the neighborhood was developed. New manufactured windows, even those made of wood, generally do not exhibit these characteristics.

2. **Repair Original Windows Where Possible.** Original wood windows that are in disrepair should be repaired if feasible. The feasibility of different approaches depends on the conditions, estimated cost, and total project scope. Examples of substandard conditions that do not necessarily warrant replacement include: failed glazing compound, broken glass panes, windows painted shut, deteriorated paint surface (interior or exterior) and loose joinery. These conditions alone do not justify window replacement.

   Repair of loose or cracked glazing, loose joinery or stuck sashes may be suitable for a carpenter or handyperson. Significant rot, deterioration, or reconstruction of failed joints may require the services of a window restoration company. If information is needed regarding vendors that provide these services, please contact the Historic Preservation Office.

3. **Replace windows with a close visual and material match**. When repairing original windows is not feasible, replacement may be considered.
   - Where replacement is desired, the new windows should match the old windows in design and other details, and, where possible, materials.
   - Certain window products, such as composite clad windows, closely replicate original appearance and therefore may be appropriate. This should be demonstrated to the Commission with material samples and product specification sheets.

- Changing the configuration, style or pattern of original windows is not encouraged, generally (for example, adding a highly styled divided light window where none existed before, or adding an architecturally incompatible pattern, such as a Prairie style gridded window to a English Cottage house).
- Vinyl windows are not an acceptable replacement for existing historic windows.

Depending on specific project needs, replacement windows may include:

- Sash replacement kits. These utilize the existing window frame (opening) and trim, but replace the existing sashes and substitute a vinyl or plastic track for the rope and pulley system. Sash replacement kits require that the existing window opening be plumb and square to work properly, but unlike insert windows, do not reduce the size of the glazed area of the window or require shimming and additional trim.
- An insert window is a fully contained window system (frame and sashes) that is “inserted” into an existing opening. Because insert windows must accommodate a new window frame within the existing opening, the sashes and glazed area of an insert window will be slightly smaller than the original window sashes. Additional trim must be added to cover the seams between the insert frame and the original window. However, for window openings that are no longer plumb, the insert frame allows the new sashes to operate smoothly.

4. **Sustainability and thermal retrofitting.**
   a. Window replacement is often the least cost effective way to improve thermal efficiency. Insulation of walls, sealing of gaps and insulation of switch plates, lights, and windows, as well as upgrades to the heating system all have a higher return on investment and are consistent with preservation of the character of a historic home.
   b. Properly maintained and weather stripped historic windows generally will improve comfort by reducing drafts.
   c. The energy invested in the manufacture of a new window and the cost of its purchase and installation may not be offset by the gains in thermal efficiency for 40 to 80 years, whereas unnecessary removal and disposal of a 100-year-old window wastes old growth fir and contributes to the waste stream.
   d. If thermal retrofitting is proposed as a rationale for window replacement, the owner should also furnish information that shows:
      - The above systematic steps have been taken to improve the performance of the whole house.
      - That the original windows, properly weather stripped and with a storm window added, is not a feasible solution to improve thermal efficiency.
      - Minimal retrofit, such as replacing only the sash or glass with thermal paned glass, is not possible.
      - Steps to be taken to salvage the historic windows either on site or to an appropriate architectural salvage company.

RECOMMENDATION

Staff defers a recommendation pending the submittal of additional bids.

<u>Recommended language for approval:</u>
I move that the Landmarks Preservation Commission approve the application for 818 North Cushman Ave., as submitted.

<u>Recommended language for deferral:</u>
I move that the Landmarks Preservation Commission defer the application for 818 North Cushman Ave., pending submittal of [cite additional information needed to review application].

<u>Recommended language for denial:</u>
I move that the Landmarks Preservation Commission deny the application for 818 North Cushman Ave., based on the following [cite design guidelines.]

PRESERVATION PLANNING/BOARD BUSINESS

AGENDA ITEM 4A: Old City Hall Historic District Design Guidelines

Staff

BACKGROUND

At its meeting of February 27, the Landmarks Commission was briefed on the progress of the Old City Hall Design Guidelines project. The consultant team is currently working on finalizing the guidelines draft. This time has been set aside on the Commission agenda to discuss any comments or feedback the Commission may have for staff to send to the consultant.

ACTION REQUESTED

No action requested.

Artifact Maintenance Plan
for the
Historic Dickman Mill Headsaw and associated machinery

Prepared by Claire Keller-Scholz, Metro Parks Tacoma

Purpose –

This artifact maintenance plan has been created for the historic Dickman Mill Headsaw belonging to Metro Parks Tacoma (MPT). This artifact, object PDP-050 on MPT's internal Heritage and Cultural Assets Inventory dates to c. 1923 and is the last known unaltered lumber mill saw of its size and mechanical specifications in Washington State. It is listed on the Washington State Historic Register and was designated an historic structure by the City of Tacoma, December 11, 1979.

The Dickman Lumber Mill was in operation from 1922-1977. (When it closed, it was the last remaining lumber mill to have operated on Ruston Way since 1893). In 1979, the saw was removed from the site and relocated to a park along Ruston Way for display. It was donated to Metro Parks Tacoma in the early 1990s, and stored at Point Defiance Park near the "Triangle" area in the Maintenance Yard.

Artifact Condition Summary –

When the saw was first recovered from the burned out ruins of Dickman Mill in 1979, Adolph Cummings and members of the Old Town Improvement Club built a display frame for the upper and lower wheels and set it up at the end of Marine Park (to the north of Dickman Mill). At this time, the machinery was sandblasted and repainted, giving the metal structure a protective coating.

The saw and carriage were cut into sections for transportation, and have never been fully reassembled even when the components were in Marine Park on display. Of the eight total component pieces, seven are intact and viable for future display and interpretive purposes. The section of gears that controlled the pulley for the log carriage will be documented and disposed of due to its poor condition and low significance.

The 1970s Washington State Register of Historic Places and the City Landmark applications are based on the headsaw itself (upper and lower wheels). The carriage pieces are also mentioned in the applications and included in the documentary photographs from1979 when the saw was removed from the mill site. There are no photographs of this pulley component from that period nor is it mentioned in the artifact nomination forms.

Image (above): Gear component of carriage pulley – this piece will be discarded due to deterioration of the many joints and fasteners.

Because of the number of moving parts on this component and years of uncovered exposure, moisture has seeped into the joints and interior spaces, accelerating the rusting of the piece. In order to display this component, many of the small pieces would have to be replaced, and the whole thing dismantled, cleaned, and rebuilt. As part of a larger head-saw artifact, this component piece does not contribute in and of itself to the overall significance for which the artifact was listed on the State Register, and is therefore nonessential to preserve. A schematic drawing, detailed photographs, and measurements will be gathered for this piece using Secretary of the Interior's Standards for Architectural and Engineering Documentation, and Historic American Engineering Record standards.[1]

Location of Pieces –

Of the remaining seven pieces, six will be restored to the original Dickman Mill site and displayed in context to interpret the historic 20th century use of the waterfront site. This display takes into consideration current recreation use of the site as well as future estimated sea level rise to provide a dedicated, long-term location for the artifact as an interpretive display. (See Appendix for diagrams of the component pieces that make up the historic Dickman Mill Headsaw and that will be preserved.)

The remaining piece of the saw, the lower wheel with motor components still present, will be preserved in storage at MPT's maintenance facility at Point Defiance Park. There is currently a planning process underway to permanently re-site this maintenance facility, and MPT is committed to including the headsaw lower wheel in its considerations such that security, access, and care will be maintained for this unique artifact.

Images: The lower wheel sits in a carriage made in 1979 when it was salvaged from the burned-out Dickman Mill site. The lower wheel for the saw is still connected by the original shaft to the circular motor component, both are in stable condition.

[1] https://www.nps.gov/history/local-law/arch_stnds_6.htm#tech ; https://www.nps.gov/hdp/

Holding the lower wheel in storage will preserve the original material of the saw even if it's not able to be reconnected with the top piece. Additionally, it honors the intent of the original community members who were energized to save the Dickman Mill headsaw after a fire destroyed the last remnants of the last working lumber mill on Ruston Way, and allows for future programming and interpretation of the headsaw mechanism with specialized programs and tours led by MPT staff and partner organizations.

It is risky to the artifact and cost-prohibitive to include the lower wheel as part of the restored saw at the Dickman Mill park site. However, its condition, size, and context with the presence of original sawmill machinery elements makes it a valuable interpretive piece in its own right and thus worth preserving in a separate location.

Care Strategies –

For this artifact, MPT will pursue a strategy of preservation to prevent further deterioration and protect the historic integrity of the machinery by leaving it intact wherever safe to do so. Additionally, although some modifications were made to the headsaw fixtures in the 1970s when it was first removed from the mill, those alterations do not impact the integrity of the machinery overall, and contribute to the story of how the artifact was saved.

The metal components of the headsaw will be cleaned (through pressure washing or sandblasting) and treated with Corothane or another polyurethane coating. The lower wheel and attached machinery will also be treated to enhance their preservation while in storage.

1929 Sumner Iron Works lumber mill band saw, on display at Camp 18, west of Portland, Oregon.

For those unfamiliar with lumber mills, it's difficult to visualize how the saw actually worked in this configuration, though both wheels together does make an impressive monument.

Metro Parks Tacoma has the advantage of the headsaw with its log carriage and rail components – together they allow for strong visual storytelling and historic interpretation at the original Dickman Mill site.

Image source: VintageMachinery.org, submitted by Frank Howarth, 3/14/2007.

Maintenance Schedule –

As part of Metro Parks Tacoma's Cultural Resource Management Plan, artifacts and historic structures are inventoried every five years with a detail review by a qualified conservator as needed.

Regular maintenance inspections are carried out on all Metro Parks Tacoma facilities. The headsaw will be visually inspected annually, with a detail condition assessment every five years. Any concerns will be communicated to the Office Heritage and Culture for follow-up with a qualified conservator.

Action Items –

- Consultants will arrange a lead-paint analysis to determine precautions needed for cleaning the artifact.
- Best pressure washing format will be determined and treatment carried out
- After pressure washing, new coating will be applied
- At that time the six sections of the saw identified for restoration to the Dickman Mill park site are removed from the Maintenance Yard, the lower wheel will be repositioned for long-term storage.
- Debris and deteriorated material will be disposed of after being appropriately documented.

Dickman Mill Headsaw

METRO PARKS TACOMA

Exhibition and Care plan

Schematic ID	Headsaw component piece	Condition	Care Plan	Rationale
S-1	Saw (top wheel)	Good	To be repainted and restored to Dickman Mill site	Significance, display value
S-2	Saw (bottom wheel)	Good	To be repainted and preserved in storage	Significance, no longer fits on-site
C-1	Carriage piece	Good	To be repainted and restored to Dickman Mill site	Significance, display value
C-2	Carriage piece	Fair	To be repainted and restored to Dickman Mill site	Significance, display value
C-3	Carriage piece	Fair	To be repainted and restored to Dickman Mill site	Significance, display value
C-4	Carriage piece	Good	To be repainted and restored to Dickman Mill site	Significance, display value
P-1	Pulley	Good	To be repainted and restored to Dickman Mill site	Display value
P-2	Pulley gears	Poor	To be fully documented and discarded	Low display value and significance, complex deteriorated components;

S-1
Headsaw
Upper
wheel

S-2
Headsaw
Lower
wheel

S-2
Headsaw Lower wheel – detail, with engine component

C-1, C-2, C-3, C-4
Carriage components

P-1
Carriage Pulley winch

P-1
Carriage
Pulley gears

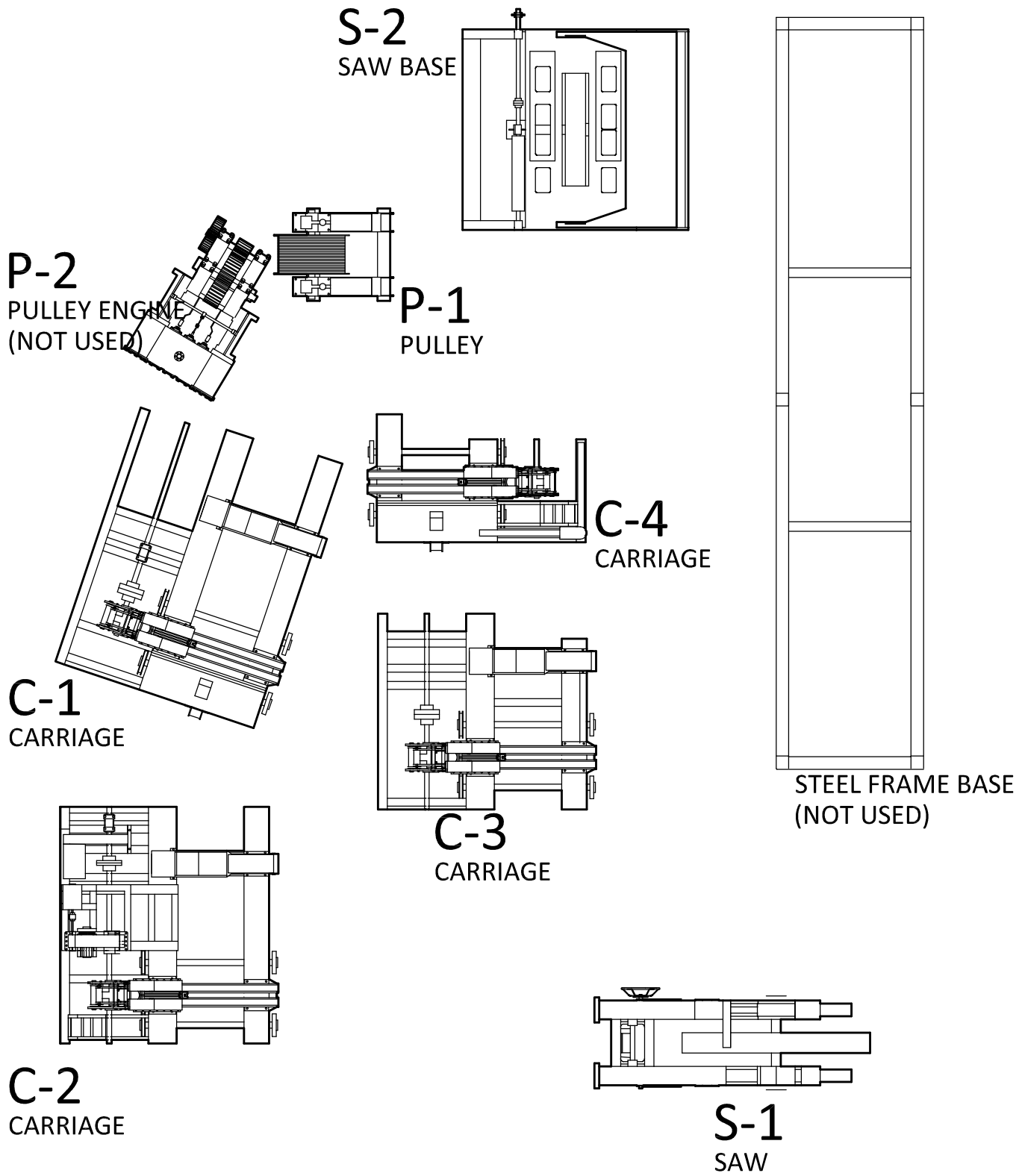

EXISTING LOCATION PLAN

POINT DEFIANCE MAINTENANCE YARD

N.T.S.

NORTH

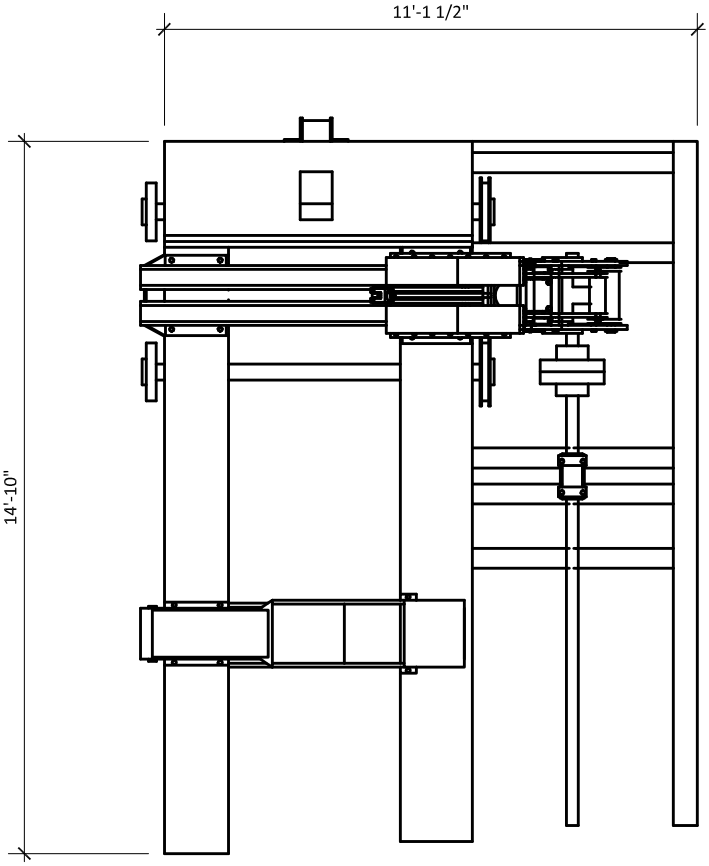

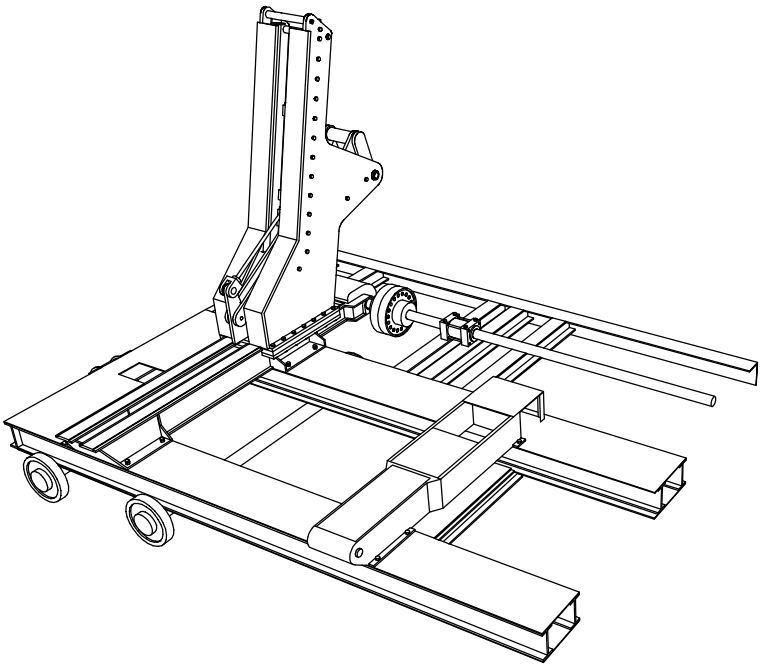

PLAN

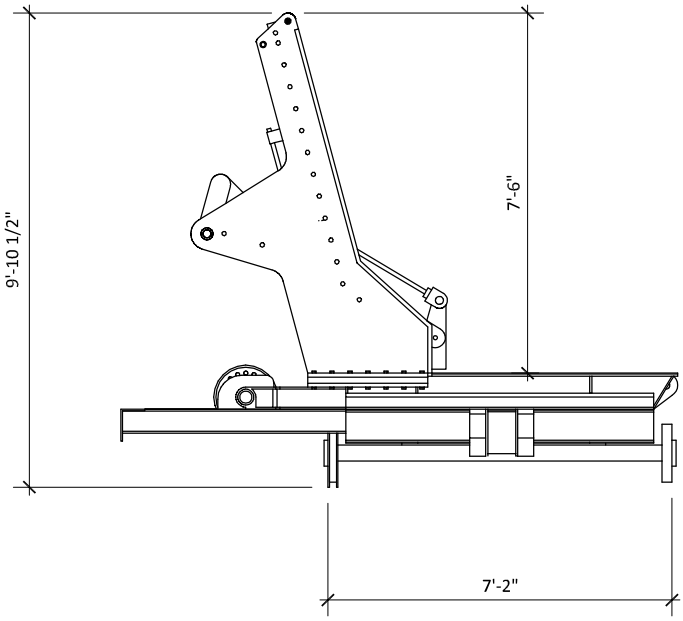

ELEVATION

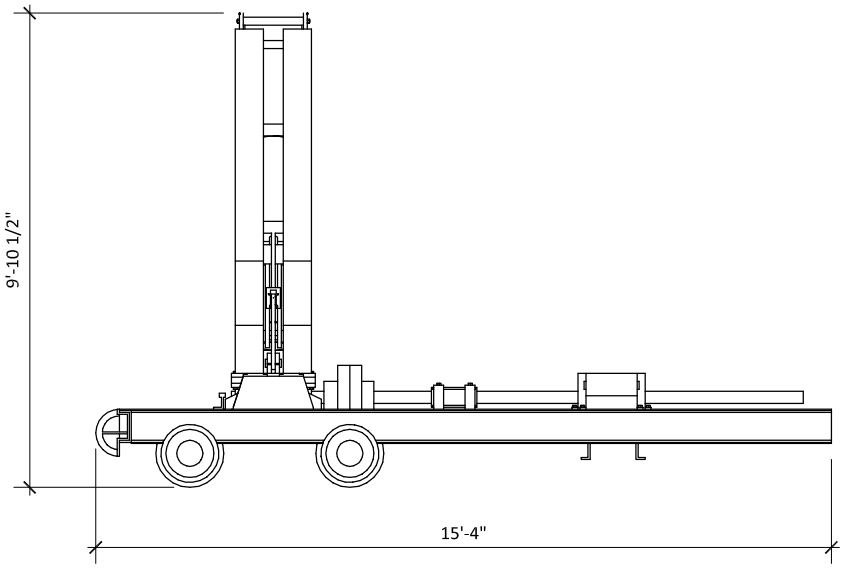

ELEVATION

C-1

CARRIAGE 1/4" = 1'-0"

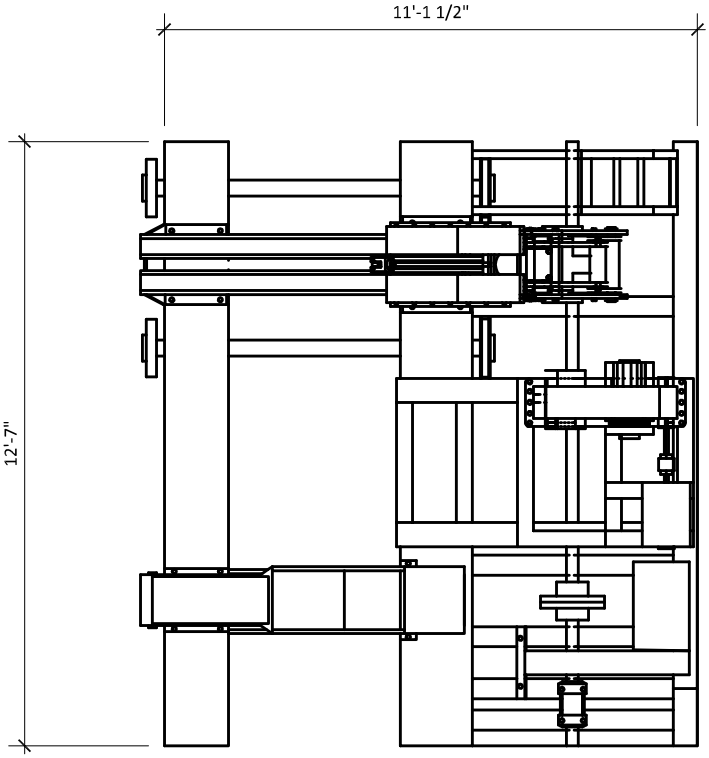

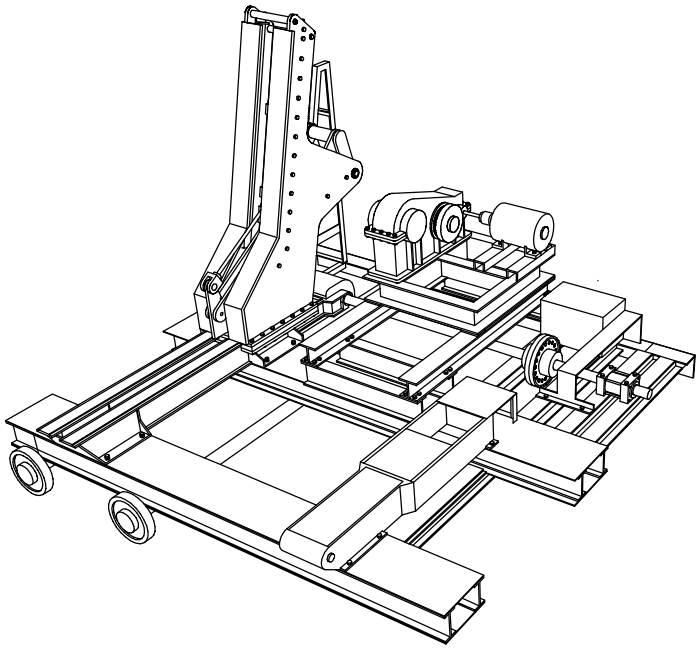

PLAN

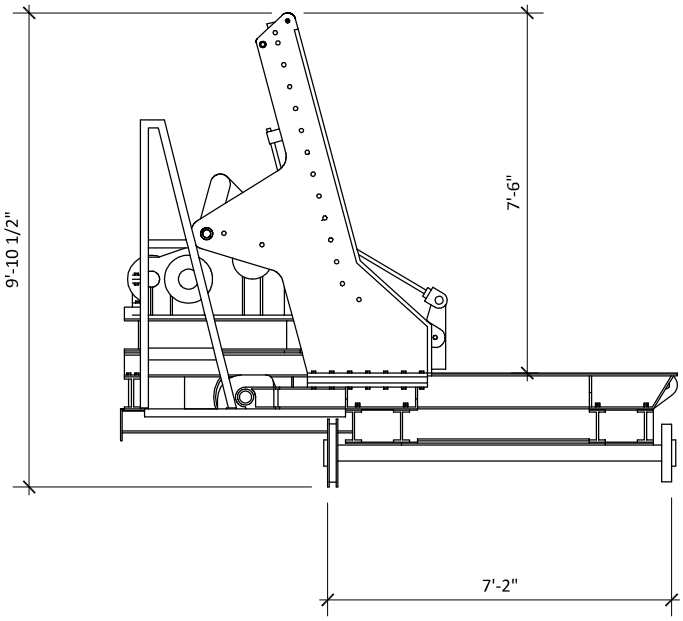

ELEVATION

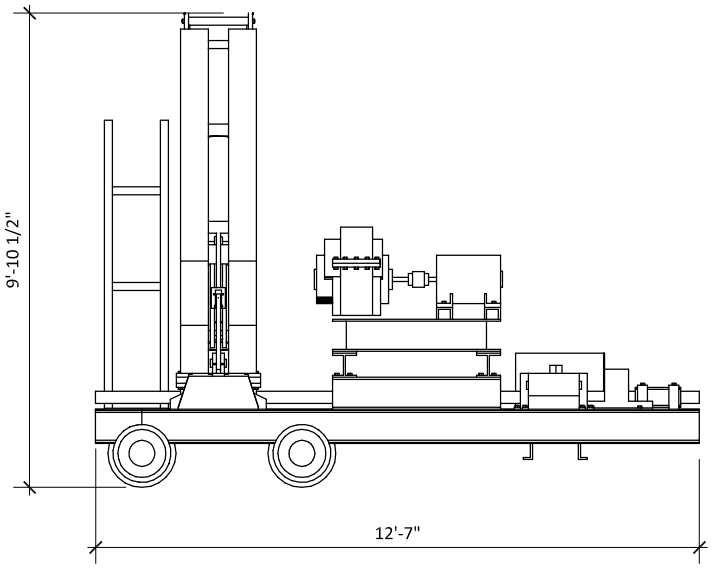

ELEVATION

C-2

CARRIAGE

1/4" = 1'-0"

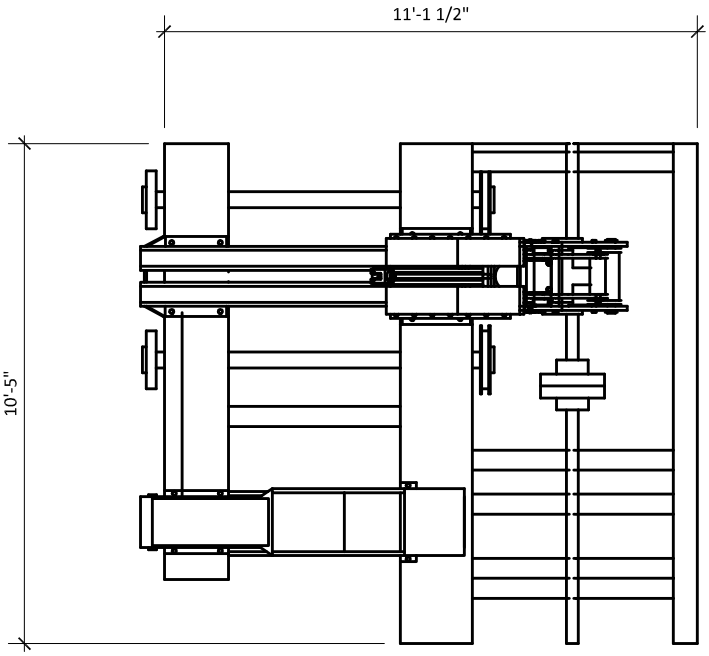

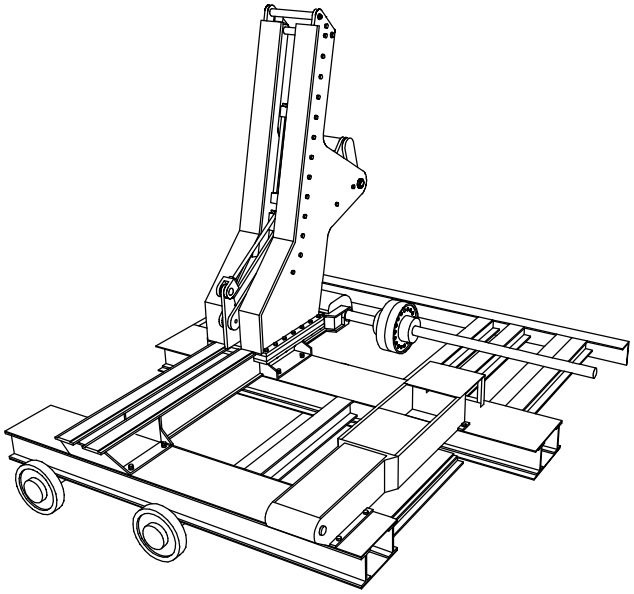

PLAN

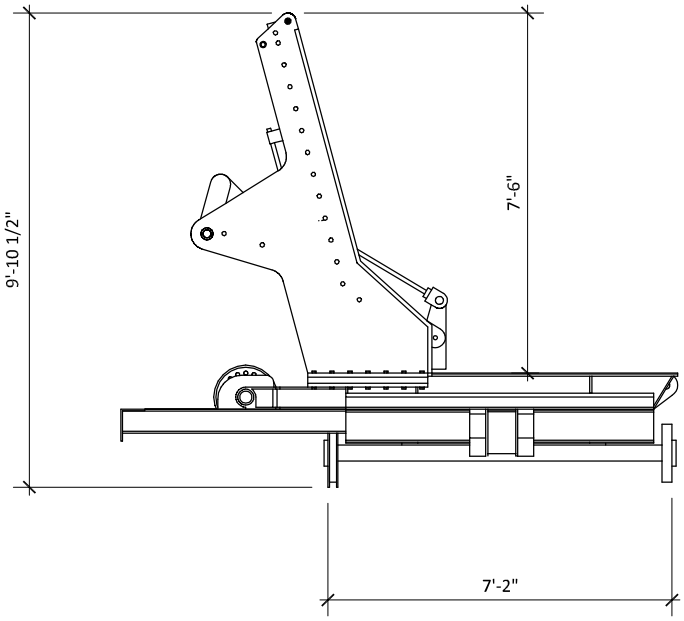

ELEVATION

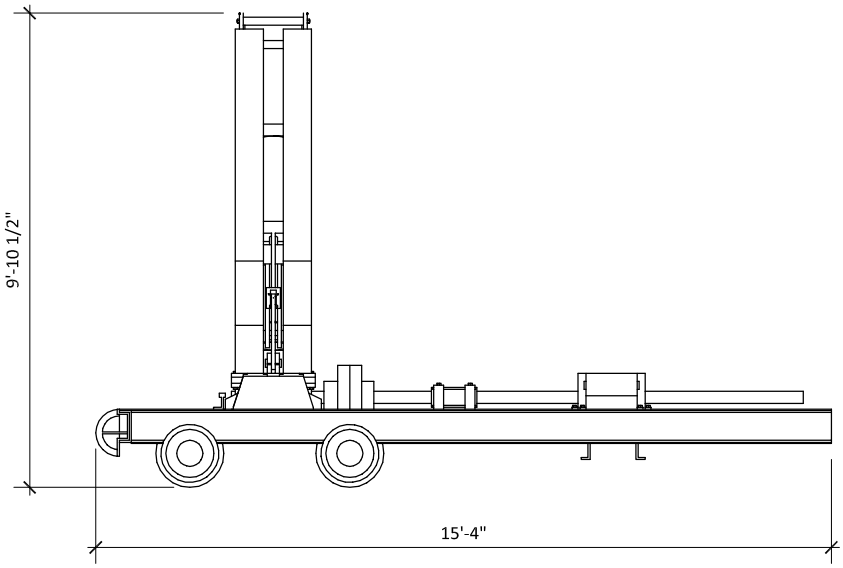

ELEVATION

C-3

CARRIAGE 1/4" = 1'-0"

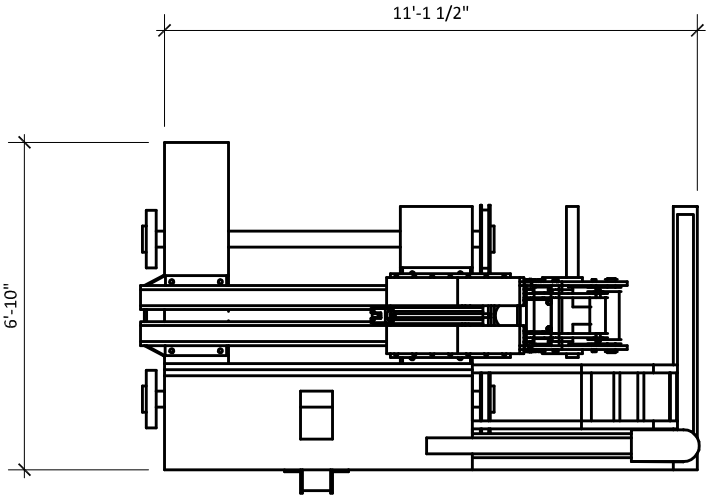

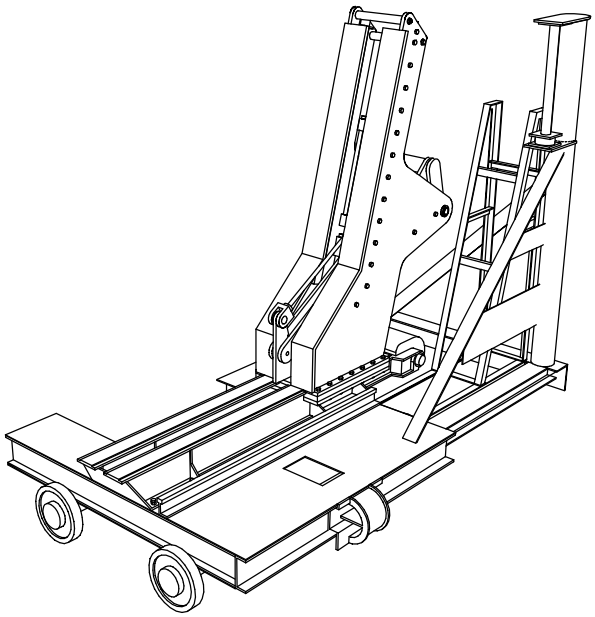

PLAN

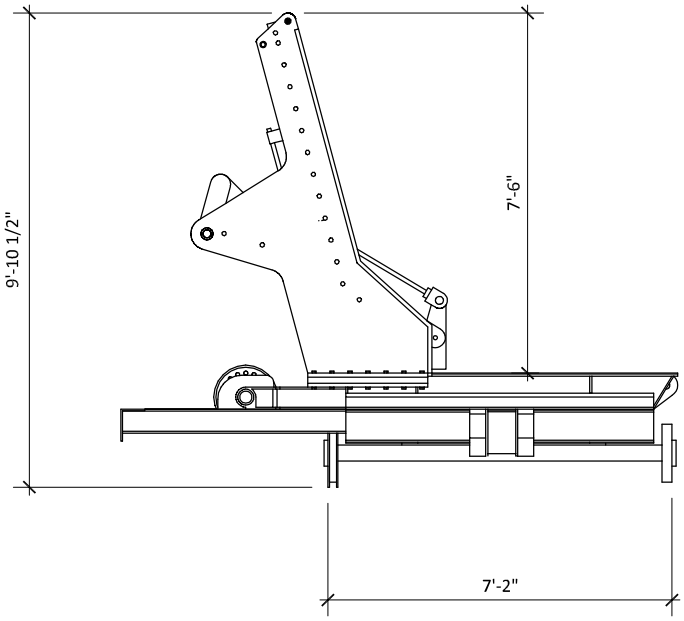

ELEVATION

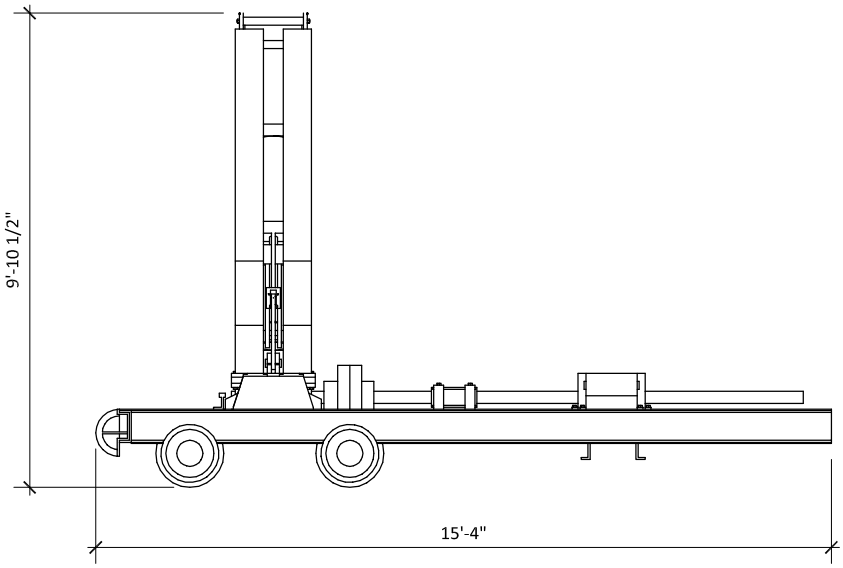

ELEVATION

C-4

CARRIAGE 1/4" = 1'-0"

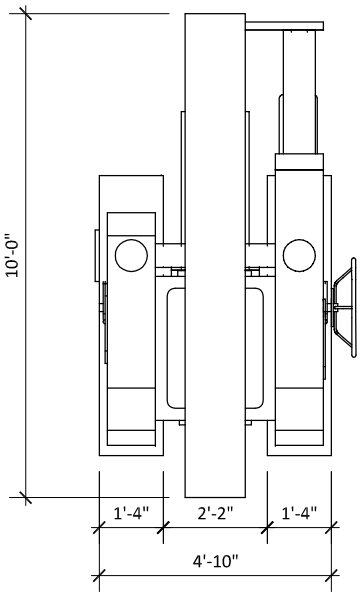

PLAN

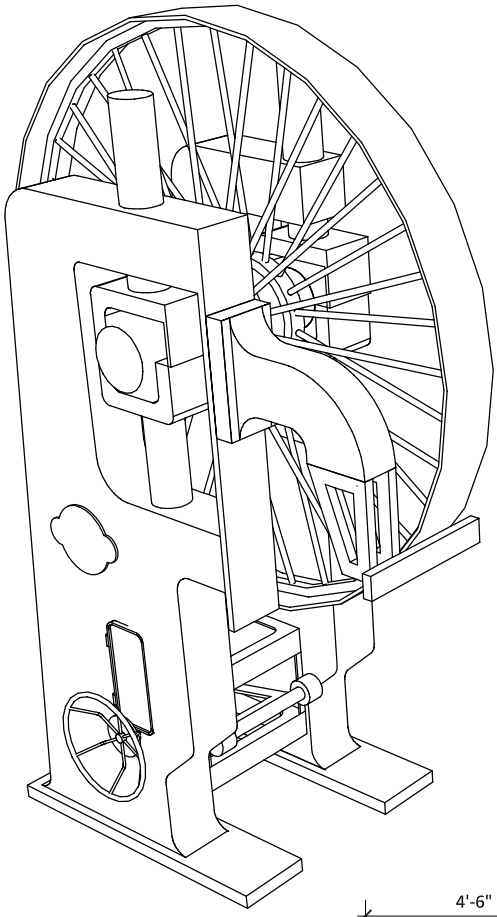

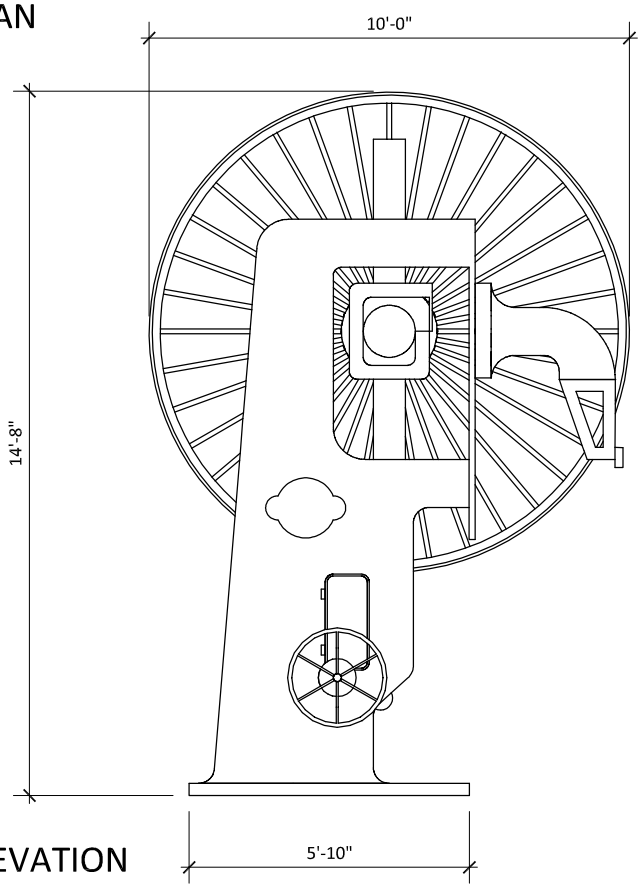

ELEVATION

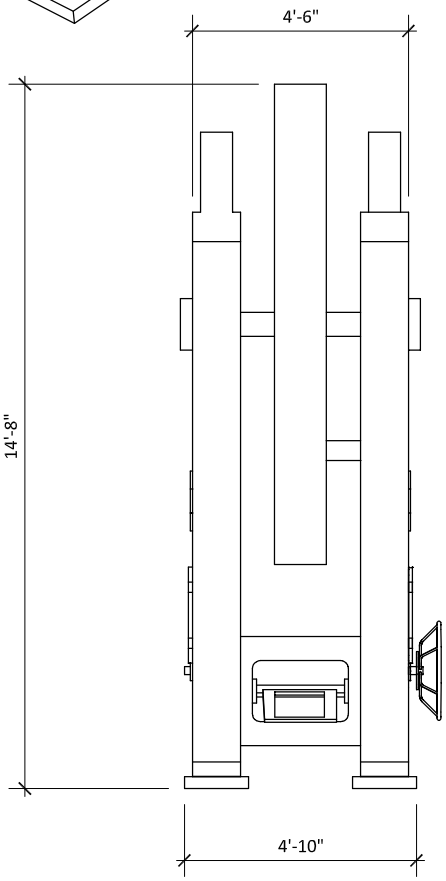

ELEVATION

S-1

SAW

1/4" = 1'-0"

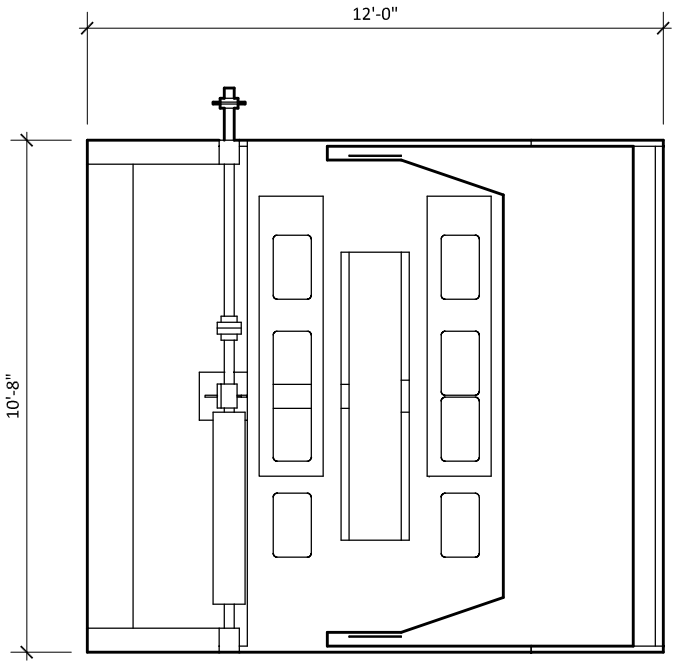

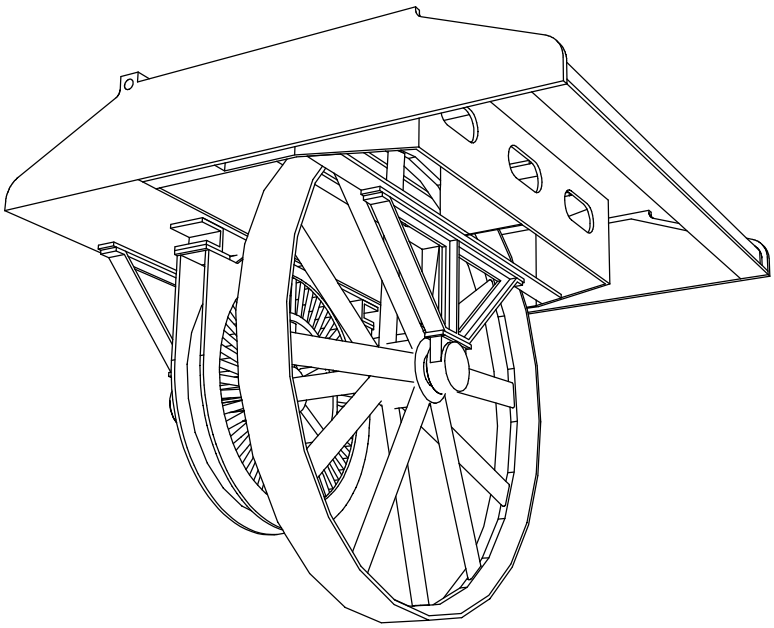

PLAN

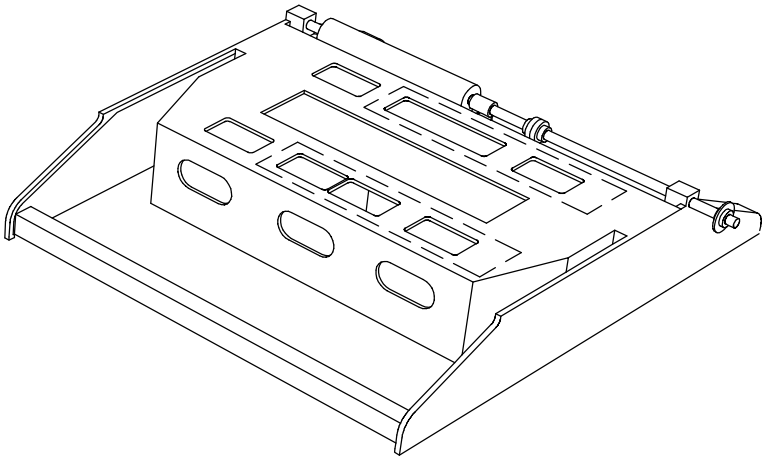

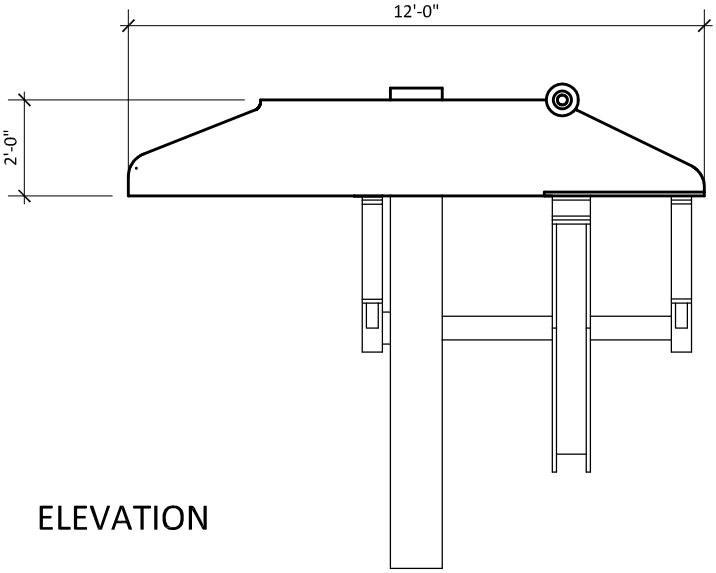

ELEVATION

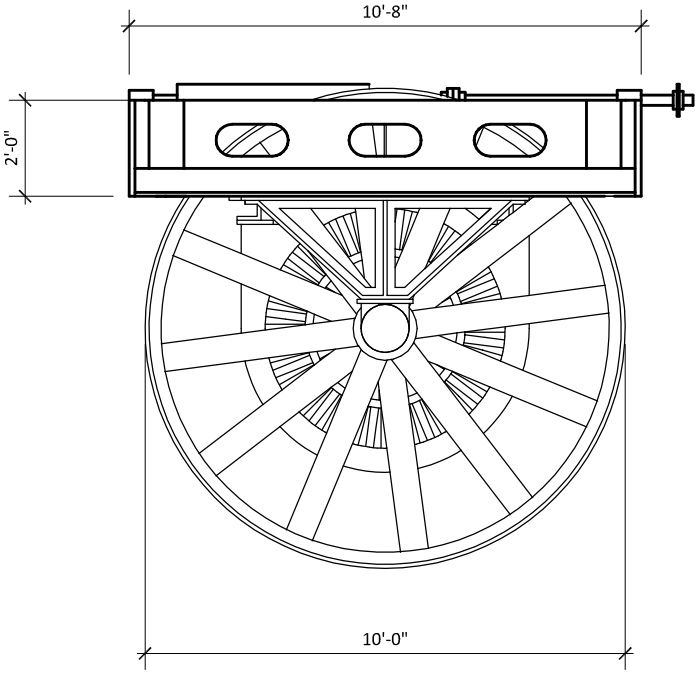

S-2

SAW BASE/LOWER WHEEL 1/4" = 1'-0" ELEVATION

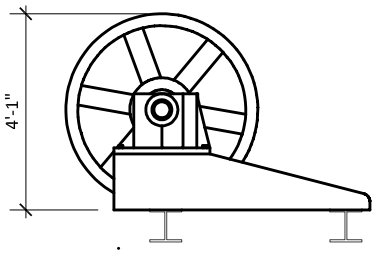

ELEVATION

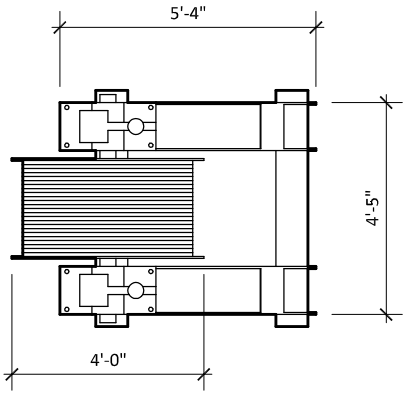

PLAN

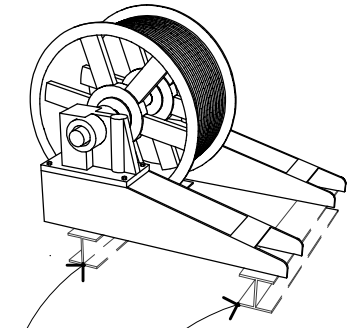

STEEL BEAMS ADDED TO PULLEY AFTER REMOVAL FROM SAW MILL (TO BE REMOVED)

P-1

PULLEY 1/4" = 1'-0"

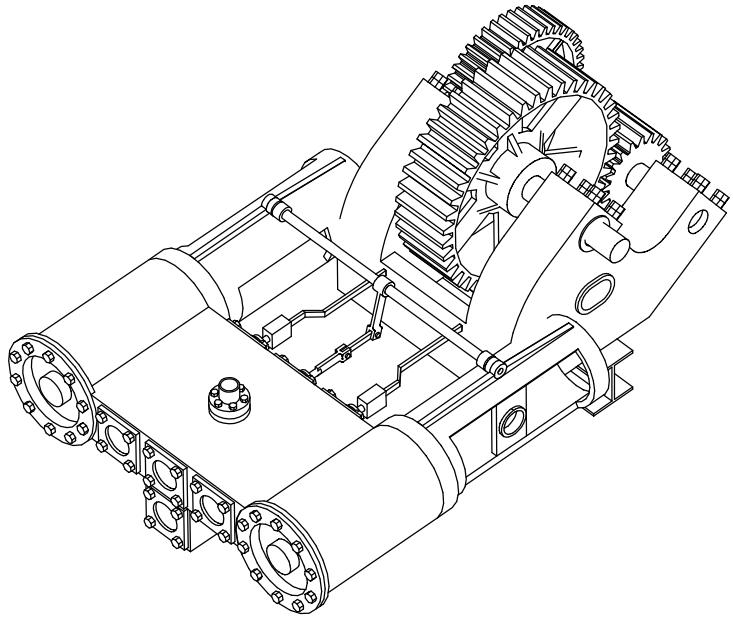

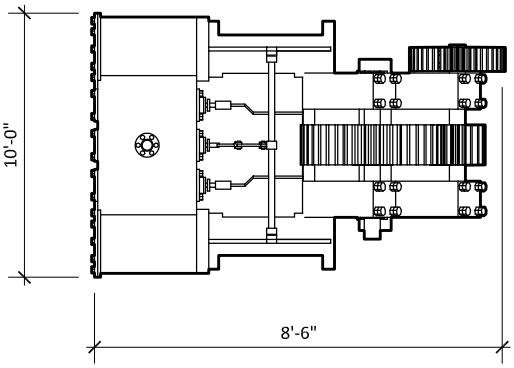

PLAN

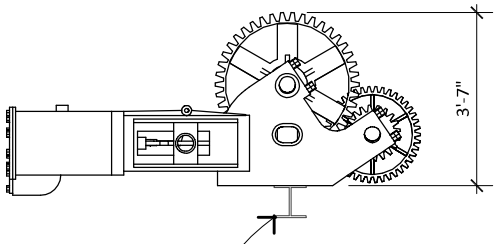

ELEVATION

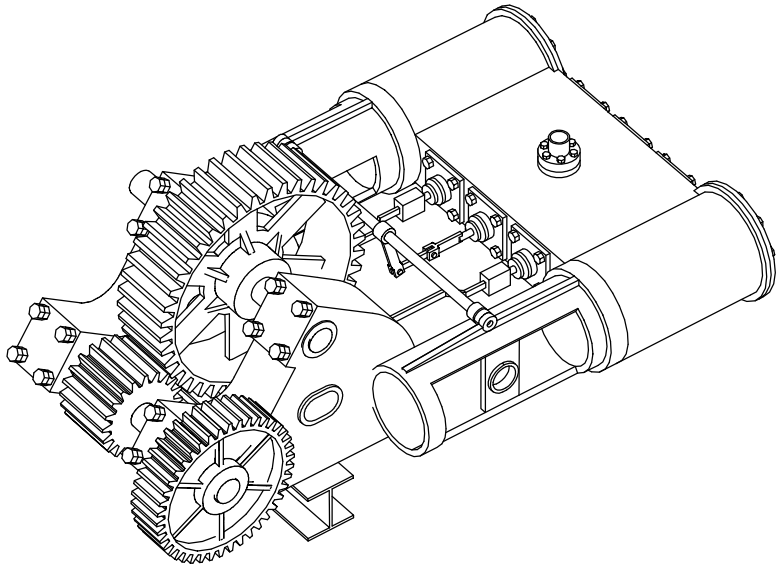

STEEL BEAM ADDED TO PULLEY ENGINE AFTER REMOVAL FROM SAW MILL

P-2

PULLEY ENGINE 1/4" = 1'-0"

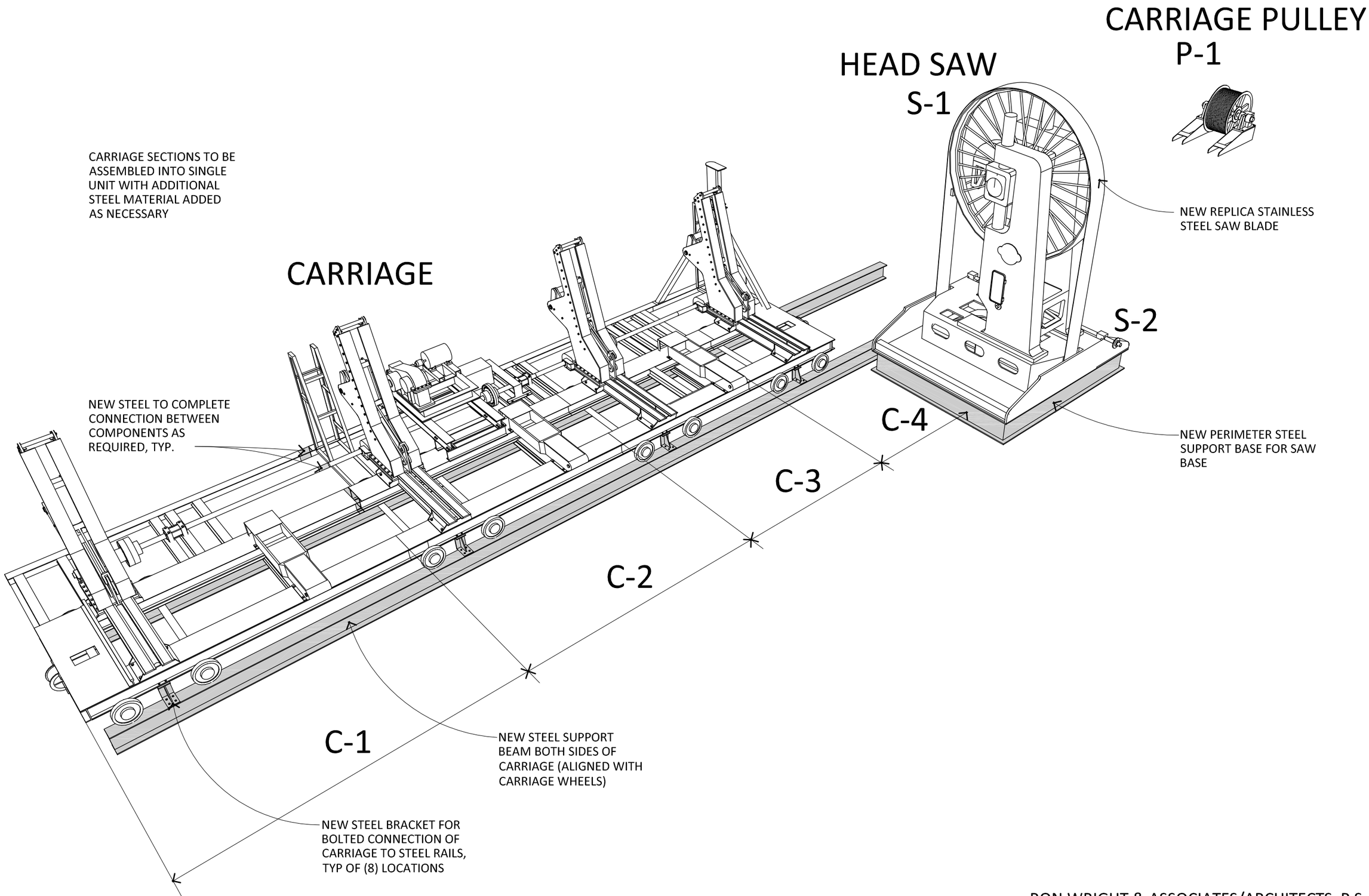

FINAL ASSEMBLY PLAN

DICKMAN MILL PARK

RON WRIGHT & ASSOCIATES/ARCHITECTS, P.S.
2003 WESTERN AVENUE, SUITE 610
SEATTLE, WASHINGTON 98121

P-2
Carriage Pulley gears - detail

Landmarks Preservation Commision

Planning and Development Services Department

747 Market Street | Room 345 | Tacoma WA 98402-3793 | 253.591.5220

APPLICATION FOR DESIGN REVIEW

Permit Number: HDR19-0004

PROPERTY INFORMATION

Building/Property Name:	Window replacement 818 N. Cushman
Building/Property Address:	818 N CUSHMAN AVE
Historic/Conservation District:	North Slope
Applicant's Name:	Jaime Broersma
Applicant's Address:	1430 NW 59TH ST #102 SEATTLE, WA 98107
Applicant's Phone:	5033198489
Applicant's Email:	jaimebroersma@yahoo.com
Property Owner's Name:	NORINS VILNIS I
Property Owner's Address:	

PROJECT SCOPE AND DESCRIPTION

Project Details

Application Type:	Residential
Type of Work:	Window Replacement/Restoration
Estimated Valuation:	14000

Application Checklist

Features to be Modified:

Windows only (outside trim will remain the same)

Program of Work:

Specifications of Materials and Finishes:

See specs attached.

Building/Roofing Information

Roof Height:

Roof Pitch:

Roof Material: N/A

Size of Construction:

Proposed Material:

See spec sheet

Exterior Material:

Window Information

Window Types:

Wood

Window Trim:

Wood

Window Material:

See attached specs

Window Locations:

See attached document

Door Information

Door Types:

N/A

Door Materials:

N/A

Door Locations:

N/A

Sign/Awning Information
Existing Signage: **Sign Dimensions:** **Sign Material:** **Logo and Letter Size:** **Lighting Specifications:**
Removing or Relocating Signage:
Method of Attachment:

818 N. Cushman

Window Restoration Review

Phase I Remodel (Main Floor)

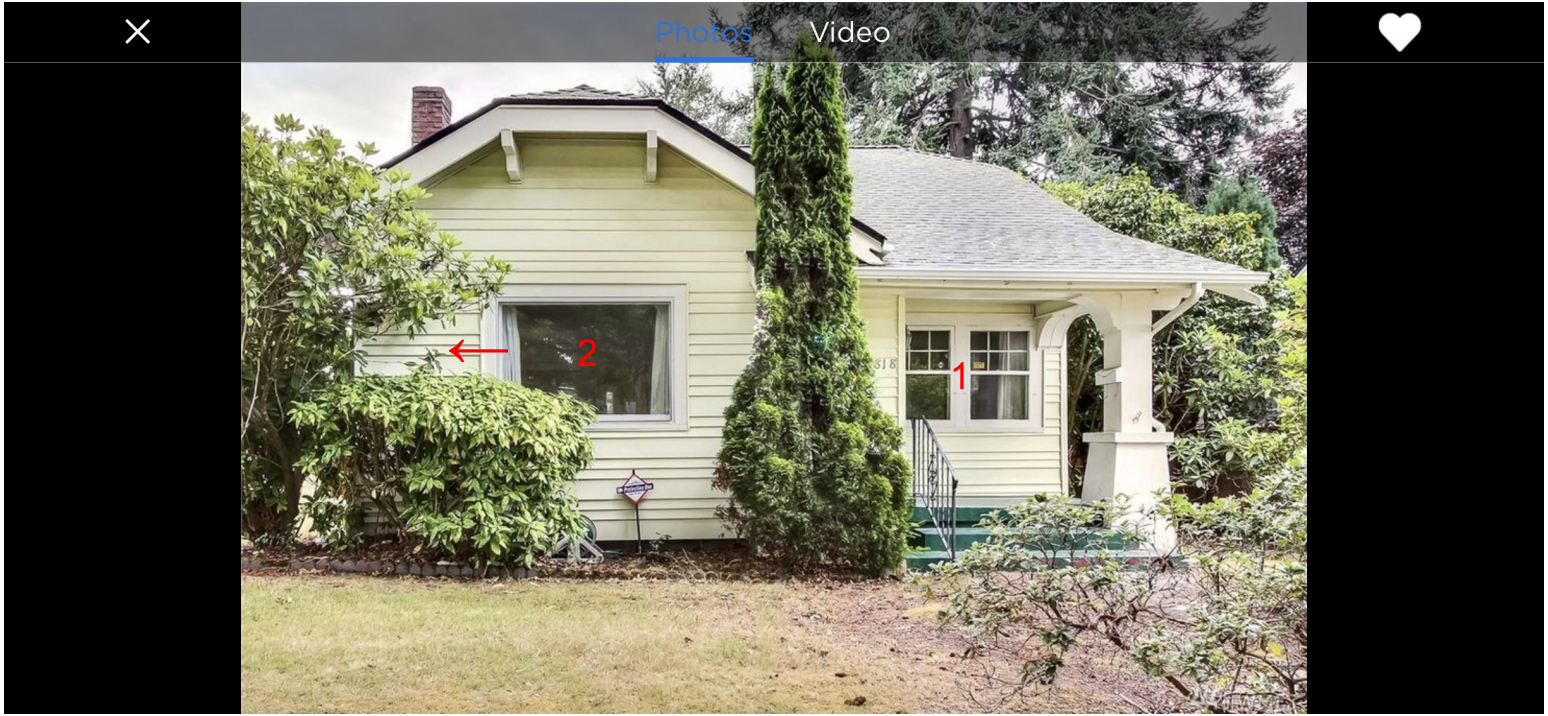

Phase I Remodel (Main Floor)

#1: Bedroom 1 North Side Street Facing = 2 original wood double hung windows.

Phase I Remodel (Main Floor)

#2: Living Room North Side Street Facing: 1 updated wood window with aluminum storm.

Phase I Remodel (Main Floor)

#3: Living Room East Side of House: 2 original wood double hung windows

Phase I Remodel (Main Floor)

#4: Dining Room East Side of House: 1 original wood double hung window

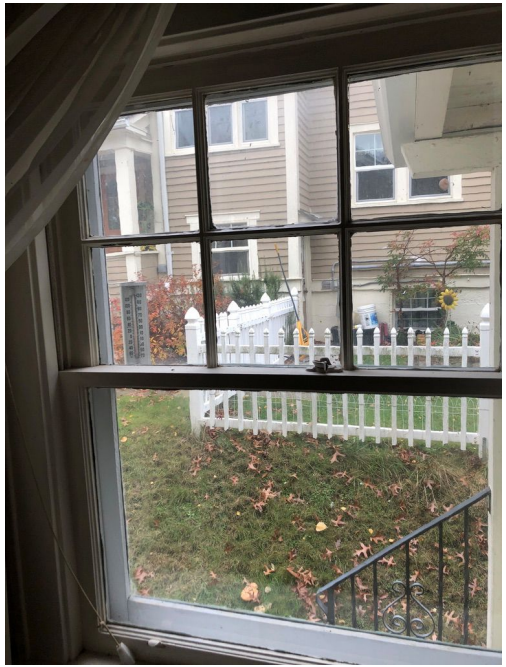

Phase I Remodel (Main Floor)

#5: Kitchen South Side of House (backyard facing): 1 vinyl window

Phase I Remodel (Main Floor)

#6: Bedroom 2 South Side of House (backyard facing): 1 original wood closet window (currently hidden under vinyl siding)

#7: Bedroom 2 South Side of House (backyard facing): 1 aluminum window

Phase I Remodel (Main Floor)

#8: Bedroom 2 West Side of House: 1 original wood single pane swivel window

Phase I Remodel (Main Floor)

#9-#10: Bathroom West Side of House: 2 aluminum windows

Phase I Remodel (Main Floor)

#11: Bedroom 1 West Side of House: 1 original wood closet window (currently hidden under vinyl siding)

#12: Bedroom 1 West Side of House: 1 original wood single pane swivel window

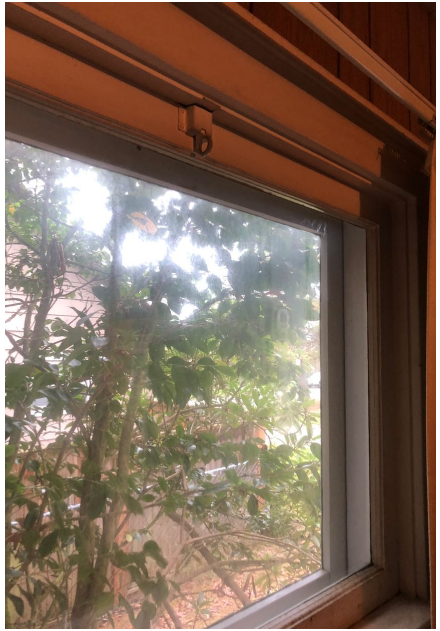

Phase 2 Remodel (2nd Floor)

Bedroom 1 (front/nw corner) = aluminum windows. To be replaced with wood double hung to match main floor.

Bedroom 2 (back/sw corner) = aluminum windows. To be replaced with wood double hung to match main floor.

Walkway (back/south wall) =1 aluminum window. To be replaced with wood (possibly swivel) to match main floor.

Legacy Renovation Products & Services, Inc.

Date: November 7, 2018 | **Bid Ref: 11-18 5 Broersma**

Customer: Jaime Broersma
Address: 818 No Cushman
City/St/Zip: Tacoma, WA 98403
Phone: 503-319-8489
Fax:
Email: jbroesma@starbucks.com

Project Name: Residence windows

Quoted by: Troy Axe
Email: taxe@legacyrenovation.com

Room	Qty	Description of Work	Net Each	Total
Liv	1	2-wide double hung window restored per scope letter dated 11-2. ~34 x 46 each	4296.00	4296.00
Liv	1	2-wide double hung window restored per scope letter dated 11-2. ~34 x 46 each	4296.00	4296.00
Din	1	Single double hung window restored per scope letter dated 11-2. ~44 x 46	2864.00	2864.00
Kit	1	New double hung sashes to match historic for not original infill window. Insulated glass. ~36 x 34	1908.00	1908.00
B Bed	1	New double hung sashes to match historic for not original infill window. Insulated glass. ~40 x 50	3339.00	3339.00
B Bed Closet	1	Single hopper sash restoration. ~20 x 20	716.00	716.00
F Bed	2	Single double hung window restored per scope letter dated 11-2. ~34 x 49	2148.00	4296.00
F Bed Closet	1	Single hopper sash restoration. ~20 x 20	716.00	716.00
F Bed	1	Single hopper sash restoration. ~40 x 30	1566.25	1566.25
Bath	2	New awning or casement sashes to match historic for aluminum infill window. Insulated glass. ~20 x 24	848.00	1696.00
			Sub Total	25693.25
			Total	**25693.25**

Installations Details:
All included. Excludes WSST

LEAD-SAFE EPA CERTIFIED FIRM

***Note: Legacy Renovation is not responsible for items not specifically listed on this quote sheet including code compliance (i.e. egress & tempered glass) which is the responsibility of the buyer.**

November 2, 2018

Jaime Boersma
818 North Cushman
Tacoma, WA 98403

Dear Jaime,

The following is the descriptive of wood window restoration as it pertains to your home and the estimate is attached. There is also an option for new sashes. The rear bedroom on the main floor and the bathroom have aluminum insert windows in the original openings that are not historic. Additionally, no windows on the upper floor are original to the home.

Lead paint is always assumed on a project like this and any work would have to include a lead work plan and proper disposal of waste. This is included in any work that we execute and Legacy Renovation is an RRP certified company. The descriptive below can be performed by Legacy Renovation in entirety as a contractor.

The windows, if we proceed, are to be restored based on the idea of improving performance and achieving a 20-year operational cycle. They will be restored in keeping with the Secretary of the Interiors' standards for historic preservation. The method for the window restoration as follows:

1. A full sash and jamb survey/log will be prepared for proper tracking and handling of materials.
2. The window sashes will be removed consistent with a developed Site Specific Safety Plan.
    a. All materials will be handled in conjunction with a Site Specific Work Plan that would include bagging materials for transport.
    b. The sashes will be permanently marked for opening.
3. The storm panels will be removed as necessary for remanufacturing or restoration.
4. The window openings will have temporary OSB protection, 6 mil reinforced plastic, or a combination of the two installed, as needed.
5. The window frames existing finish is prepared by mechanical scrape only in the field.
6. The window sashes' will be treated by chemical strip. This process will abate all paint and the glazing compound. The window frames existing finish is prepared by mechanical scrape and encapsulation of paint.
7. The sashes are to be restored and the hardware is replaced as required with historic match. The method for restoration of the material breaks down as follows:
    a. The sashes will be inspected thoroughly and the joints will be reinforced.
    b. All material will be treated with "Board Defense" solution and have repairs made with the "Wood Care" epoxy repair system which includes "Rotfix" and "Sculpwood.
    c. The windows will be milled and modified to accept a weather-strip that would be installed at the perimeter of the sash.
    d. The historic glass will be reset and glazed with topping compound. Broken glass will be replaced with clear 1/8" annealed glass or tempered where required by code. Historic

glass that is salvaged will be replaced in its' location regardless of code in the absence of owner direction.

   e. Final finish will be applied to sashes.

8. The window frames will be treated in the field. The frames restoration consists of the following:
   a. The frames will be thoroughly scraped to lowest well-bonded layer and/or spot stripped chemically for sanding purposes.
   b. The frames will be inspected thoroughly and the deteriorated material will be removed.
   c. All material will be treated with "Board Defense" solution and have repairs made with the "Wood Care" epoxy repair system which includes "Rotfix" and "Sculpwood".
   d. New ropes and verification and/or replacement of weights will be installed in historic double hungs.
9. New historic matched window components will be built if needed and finished to match the original material in species, dimension, profile, and style of manufacture and get glazed and finished per the historic originals.
10. The window sashes and storms will be returned and installed into the prepared openings when finishes are appropriate:
    a. Window hardware will be re-used if possible and in acceptable condition where sashes are to be operable. Otherwise, new historic match hardware will be used.
    b. All adjustment will be done.
11. Exterior joint sealant from trim to trim will be installed.
12. Final paint will be installed to frames.

13. All touch-up and final adjustment will be made to all of Legacy Renovations' scope of work.

The frame restoration method above can be completed and new historic appearance matched sashes with insulated glass can be manufactured to install in the areas where sashes are missing or if new sashes are wanted to match historic profiles and dimensions with insulated glass.

Legacy Renovation has performed on many projects of this style and type. We know the types of conditions that are likely to arise during a project like this. We can provide extensive references and qualification documentation if needed.

Thanks for the opportunity and please call if you have any questions.

Troy Axe

President
Legacy Renovation Products & Services, Inc.
3001 South Steele St
Tacoma, WA 98409
Ph: 253.474.5175
Fax: 253.474.5542

Email: taxe@legacyrenovation.com