City of Tacoma
Department of Public Works
Engineering Division

SPECIFICATION NO. PW14-0699N

ADA IMPROVEMENTS PHASE 2

Project No. CIP-00030-04

PEOPLES COMMUNITY CENTER

PANTAGES THEATER

RIALTO THEATER

SWASEY BRANCH LIBRARY

December 2014

City of Tacoma

REQUEST FOR BIDS

Specification No. PW14-0699N
ADA Improvements Phase 2

The City of Tacoma is accepting **BIDS** for the above solicitation. Submittals will be received and time stamped only at the Purchasing Division, located in the Tacoma Public Utilities Administration Building, Main Floor, 3628 South 35th Street, Tacoma, WA 98409. Respondents may submit bids by fax to 253 502-8372, or by email to sendbid@cityoftacoma.org unless otherwise stated in this Request for Bids. The City of Tacoma accepts no responsibility for transmission errors.

Submittal Deadline: Bids will be received until **11:00 a.m., Pacific Time, Friday, January 23th, 2015.**

Estimate: $100,000

Contacts: Additional information regarding the specifications may be obtained by contacting Mark D'Andrea at 253 591-5518, or contact Debbie Seibert at 253-502-8587, for general purchasing information.

.

City of Tacoma protest policy, located at www.tacomapurchasing.org, specifies procedures for protests submitted prior to and after submittal deadline.

Meeting sites are accessible to persons with disabilities. Reasonable accommodations for persons with disabilities can be arranged with 48 hours advance notice by calling 253-502-8468.

CITY OF TACOMA

DEPARTMENT OF PUBLIC WORKS
ENGINEERING DIVISION

REQUEST FOR BIDS, SPECIAL PROVISIONS, BID PROPOSAL AND CONTRACT

FOR

SPECIFICATION NO. PW14-0699N

ADA IMPROVEMENTS PHASE 2

Project No. CIP-00030-04

PEOPLES COMMUNITY CENTER

PANTAGES THEATER

RIALTO THEATER

SWASEY BRANCH LIBRARY

Mark D'Andrea, P.E.
Engineering Division
Public Works Department

Room 520, Tacoma Municipal Building
Tacoma, Washington 98421-2711

CITY OF TACOMA
STANDARD TERMS AND CONDITIONS
SECTION 1 – SOLICITATION

THE FOLLOWING TERMS AND CONDITIONS ARE PART OF THIS SPECIFICATION AND ARE BINDING ON ALL RESPONDENTS SUBMITTING RESPONSES TO REQUESTS FOR BIDS, PROPOSALS, QUALIFICATIONS AND INFORMATION.

1.01 DELIVERY OF SUBMITTALS TO THE CITY'S PURCHASING DIVISION

Submittal packages must be received by the City's Purchasing Division, Tacoma Public Utilities Administration Building, Main Floor, 3628 South 35th Street, Tacoma, WA 98409-3115, prior to the scheduled time and date stated in the solicitation announcement. ~~Each submittal, intact and bound, shall be completely sealed, with the name of the submitting party (hereinafter "Respondent"), the specification number and title clearly marked on the exterior of the package.~~ City offices are not open for special mail or other deliveries on weekends and City holidays.

Faxed submittals are accepted, however, the City accepts no responsibility for transmission errors. Submittals may be delivered to the City by mail or in person; however, **the Respondent is solely responsible for timely delivery of its submittal to the Purchasing Division.**

~~Facsimile (fax) copies of submittals for requests for sealed bids, requests for proposals, requests for qualifications and requests for information will not be accepted at any City fax machine.~~

Submittals received after the time stated in the solicitation announcement will not be accepted ~~and will be returned, unopened, to the Respondent~~.

For purposes of determining whether a submittal has been timely received, the City's Purchasing Division may rely on Universal Coordinated Time from the National Bureau of Standards as reported by http://wwp.greenwichmeantime.com/

1.02 WITHDRAWAL OF SUBMITTALS

A. Prior to Submittal Deadline (Bid Opening)

Submittals may be withdrawn prior to the scheduled submittal deadline by providing written notice to the City's Purchasing Division. The notice may be submitted in person or by mail; however, it must be received by the City's Purchasing Division prior to the submittal deadline.

B. After Submittal Deadline

No submittal can be withdrawn after having been opened as set forth in the solicitation announcement, and before the actual award of the contract, unless the award is delayed more than 60 calendar days beyond the date of opening. If a delay of more than 60 calendar days does occur, the Respondent must submit written notice to the purchasing manager that Respondent is withdrawing its submittal.

1.03 SUBMITTAL IS NON-COLLUSIVE

The Respondent acknowledges that by its delivery of a submittal to the City in response to this solicitation it represents that the prices in such submittal are neither directly nor indirectly the result of any formal or informal agreement with another Respondent.

1.04 OPENING AND ACCEPTANCE OF SUBMITTALS

Submittals, unless previously withdrawn, will be read aloud, irrespective of any irregularities or informalities in such submittal, at the time and place specified in the solicitation announcement.

All submittals must remain open for acceptance by the City for a period of at least 60 calendar days from the date of opening.

1.05 RIGHT TO REJECT

The City of Tacoma reserves the right to reject any and all submittals, waive minor deviations or informalities, and if necessary, call for new submittals.

A. Requests for Proposals (RFP)

By submitting a proposal in response to a City RFP, the Respondent acknowledges and consents to

the below City rights and conditions. With regard to this procurement process, the City reserves, holds without limitation, and may exercise, at its sole discretion, the following rights and conditions:

1. To terminate the procurement process or decide not to award a contract as a result thereof by written notice to the Respondents for any reason whatsoever.
2. To waive any defect, technicality, or any other minor informality or irregularity in any submittal, or any other response from Respondents.
3. To make minor or major changes or alterations to the evaluation, selection and/or performance schedule(s) for any events associated with this procurement process upon notice to the Respondents.
4. To supplement, amend or otherwise modify the RFP specifications, at any time upon prior notice to Respondents, including but not limited to modifications to the description of services and/or products contained in the RFP, by omitting services/products and/or including services/products not currently contemplated therein.
5. To request clarifications, additional information, and/or revised submittals from one or more Respondents.
6. To conduct investigations with respect to the qualifications and experience information for each Respondent included in a submittal and to request additional evidence to support any such information.
7. To eliminate any Respondent that submits an incomplete or inadequate response, or is non-responsive to the requirements of the RFP specifications, or is otherwise deemed to be unqualified during any stage of the procurement process.
8. To select and interview a single finalist or multiple finalists for the purpose of promoting the City's evaluation of submittals provided in response to the RFP specifications. The City may, in its sole and exclusive discretion as to what is in the City's best interest, elect not to conduct interviews of any or all respondents in connection with this RFP process.
9. To discontinue contract negotiations with a selected Respondent and commence such negotiations with another respondent, except as otherwise provided in Chap. 39.80, RCW.
10. To select and enter into a contract with one or more Respondents whose submittal best satisfies the interests of the City and is most responsive, in the sole judgment of the City, to the requirements of the RFP specifications.
11. To take any other action affecting the RFP specifications or the procurement process that is determined to be in the City's best interests.
12. In the event the City receives questions concerning RFP specifications from one or more Respondents prior to the deadline for response, the City reserves the right to provide such questions, and the City's responses, if any, to all Respondents.
13. Neither the City, its officials, staff, agents, employees, representatives, nor consultants will be liable for any claims or damages resulting from any aspect of this procurement process.

1.06 EVALUATION OF SUBMITTALS

The City of Tacoma reserves the right to award to the lowest and best responsible Respondent(s) delivering a submittal in compliance with the specification documents, provided such submittals are reasonable and are in the best interest of the City to accept. The City may use a number of criteria for determining award, including evaluation factors set forth in Municipal Code Section 1.06.262. Respondents who are inexperienced or who fail to properly perform other contracts may have their submittal rejected for such cause.

A. Evaluation Factors

In addition to the factors set forth in Municipal Code Section 1.06.262, the following may be used by the City in determining the lowest and best responsible submittal:

1. Compliance with the Specification and with applicable City requirements, including by not limited to, the City's Ethics Code and its Historically Under-utilized Business and Local Employment and Apprenticeship programs.
2. Submittal prices, listed separately if requested, as well as a lump sum total (if the unit price does not compute to the extended total price, the unit price shall govern).
3. Time of delivery and/or completion of performance (delivery date(s) offered).
4. Warranty terms.
5. Quality of performance of previous contracts or services, including safety requirements and past compliance with the City's Ethics Code.
6. Previous and existing compliance with laws and ordinances relating to contracts or services.
7. Sufficiency of financial resources.
8. Quality, availability and adaptability of the supplies or services to the particular use required.
9. Ability to provide future maintenance and service on a timely basis.
10. Location of nearest factory authorized warranty repair facility or parts dealership.
11. Ability, capacity, experience, stability, reputation, integrity, character, judgment, technical qualifications and skill to perform the contract or provide the services required.

All other elements or factors, whether or not specifically provided for in this Specification, which would affect the final cost to, and the benefits to be derived by, the City, may be considered in determining the award of the contract. The final award decision will be based on the best interests of the City.

B. Cash Discount

Payment discount periods of 20 calendar days or more, if offered in the submittal, will be considered in determining the apparent lowest responsible submittal. Discounts will be analyzed in context of their overall cumulative effect.

1.07 COMPLETION OF CITY FORMS

All submittals must be completed in ink or typewritten using the forms included with this Specification, and submitted exactly as specified.

City forms requiring signature must be signed in ink by an authorized officer, employee or agent of the Respondent.

Prices must be stated in figures. Corrections shall be initialed in ink by the person signing the submittal. Prices having erasures or interlineations (cross outs) will not be accepted unless initialed in ink by the Respondent.

1.08 CORRECTION OF AMBIGUITIES AND OBVIOUS ERRORS

The City reserves the right to correct obvious errors in the Respondent's submittal. In this regard, if the unit price does not compute to the extended total price, the unit price shall govern.

1.09 CLARIFICATION OF SPECIFICATION

Questions regarding this Specification and/or any included terms, conditions, forms, plans or drawings are to be submitted in writing to the City staff person identified as the contact for this Specification. All requests for interpretation must be received by the City no later than five business days prior to the opening date. Any interpretation of this Specification will be made by addendum duly issued and posted to the Purchasing website at www.TacomaPurchasing.org. Such addendum must be acknowledged in the submittal. The City of Tacoma will not be responsible for any other explanation or interpretation of the specification documents.

1.10 ALTERATIONS NOT ALLOWED

Except as otherwise specifically provided in the specification documents, submittals that are incomplete or conditioned in any way, contain erasures, alternatives or items not called for, or not in conformity with law, may be rejected as being non-responsive. Any attempt to condition the submittal by inserting exceptions to the Specification or any conditions, qualifications or additions that vary its terms may result in rejection of the submittal. The City cannot legally accept any submittal containing a material deviation from the Specifications.

1.11 INSERTION OF MATERIAL CONFLICTING WITH SPECIFICATIONS

Only material inserted by the Respondent to meet requirements of the specification documents will be considered. Any other material inserted by the Respondent will be disregarded by the City of Tacoma as being non-responsive and may be grounds for rejection of the submittal.

1.12 FIRM PRICES/ESCALATION

Except as specifically allowed elsewhere in the specification documents, only firm prices will be accepted.

1.13 SHIPPING

Prices must be quoted FOB destination (the place of destination as defined in RCW 62A.2-319, as that statute may hereafter be amended), with freight prepaid and allowed (shipping costs included in unit prices), and risk of loss remaining with Respondent until delivery is tendered.

1.14 LEGAL HOLIDAYS

The City of Tacoma observes the following holidays, which shall apply to performance of all contracts awarded from this solicitation:

New Year's Day	January 1
Martin Luther King's Birthday	3rd Monday in January
Washington's Birthday	3rd Monday in February
Memorial Day	Last Monday in May
Independence Day	July 4
Labor Day	1st Monday in September
Veteran's Day	November 11
Thanksgiving Day	4th Thursday of November
Day after Thanksgiving	4th Friday of November
Christmas Day	December 25

When any of these holidays occur on Saturday or Sunday, the preceding Friday or the following Monday, respectively, is a legal holiday for the City of Tacoma.

1.15 TAXES

Unless otherwise required in this Specification, applicable federal, state, city and local taxes shall be included in the submittal as indicated below. The total cost to the City, including all applicable taxes, may be the basis for contract award determination. As used herein, the term “taxes” shall include any and all taxes, assessments, fees, charges, interest, penalties, and/or fines imposed by applicable laws and regulations in connection with the procurement of goods and/or services hereunder.

A. Federal Excise Tax

The City of Tacoma is exempt from federal excise tax. The City will furnish a Federal Excise Tax Exemption certificate, if required. If the Respondent fails to include any applicable tax in its submittal, then Respondent shall be solely responsible for the payment of said tax.

B. State and Local Sales Tax

The City of Tacoma is subject to Washington state sales tax. It is the Respondent's obligation to state the correct sales tax percentage and include the applicable Washington state, city and local sales tax as a separate line item(s) in the submittal.

C. City of Tacoma Business and Occupation Tax

It is the Respondent's obligation to include City of Tacoma Business and Occupation tax in the unit and/or lump sum prices submitted; this shall not be not shown separately on the submittal.

Sub-Title 6A of the City of Tacoma Municipal Code provides that all transactions with the City of Tacoma, wherever consummated, are subject to the City of Tacoma's Business and Occupation Tax.

It is the responsibility of the Respondent awarded the contract to register with the City of Tacoma's Tax and License Division, 733 South Market Street, Room 21, Tacoma, WA 98402-3768, telephone 253-591-5252, website http://www.cityoftacoma.org/Page.aspx?nid=201.

D. Any or All Other Taxes

Any or all other taxes are the responsibility of the Respondent unless otherwise required by law.

1.16 WASHINGTON BUSINESS LICENSE REQUIREMENT

All submittals should include a Washington State Business License number in the space provided on the Submittal Signature Page. If the recommended respondent does not have a Washington State Business License at the time of submittal, it must obtain such license and provide proof thereof to the City of Tacoma prior to contract award. Failure to include a Washington State Business License may be grounds for rejection of the submittal. Information regarding Washington State Business Licenses may be obtained at http://www.dol.wa.gov/businesses.htm.

1.17 PUBLIC DISCLOSURE

Washington State Public Disclosure Act (RCW 42.56 et seq.) requires public agencies in Washington to promptly make public records available for inspection and copying unless they fall within the specified exemptions contained in the Act, or are otherwise privileged. Documents submitted under this Specification shall be considered public records and, with limited exceptions, will be made available for inspection and copying by the public.

1.18 PROPRIETARY OR CONFIDENTIAL DESIGN INFORMATION

If the Respondent considers any submittal document to be protected from disclosure under the law, the Respondent shall clearly identify on the page(s) affected such words as “CONFIDENTIAL,” "PROPRIETARY” or BUSINESS SECRET.” The Respondent shall also submit an index with its submittal identifying the affected page number(s) and location(s) of all such identified material. **Marking the entire submittal as “confidential” or “proprietary” is not acceptable and is grounds to reject such submittal.**

If a request is made for disclosure of such identified documents or portions thereof, the City will determine whether the material is exempt from public disclosure. If, in the City’s opinion, the material is subject to disclosure, the City will notify Respondent of the request and impending release and allow the Respondent 10 days to take whatever action it deems necessary to protect its interests. The City will cooperate with any legal action initiated by the Respondent to prevent release; provided that all expense of such action shall be borne solely by the Respondent, including any damages, attorney’s fees or costs awarded by reason of having opposed disclosure and Respondent shall indemnify City against same. If the Respondent fails or neglects to take such action within said period, the City will release all materials deemed subject to disclosure. Submission of materials in response to this solicitation shall constitute assent by the Respondent to the foregoing procedure and the Respondent shall have no claim against the City on account of actions taken pursuant to such procedure.

1.19 TITLE VI OF THE CIVIL RIGHTS ACT OF 1964

The City of Tacoma ensures full compliance with Title VI of the Civil Rights Act of 1964 by prohibiting discrimination against any person on the basis of race, color, national origin or sex in the provision of benefits and services resulting from its federally assisted programs and activities. Contact Tacoma's Title VI coordinator at 253-502-8072 for additional information.

1.20 LEGAL DISPUTES

Respondent agrees and stipulates that in the event any litigation should occur concerning or arising out of this solicitation or any submittal delivered in response hereto, the sole venue of any such legal action shall be the Pierce County Superior Court of the state of Washington and the interpretation of the terms of the solicitation and submittal shall be governed by the laws of the state of Washington.

1.21 PURCHASE ORDER TERMS AND CONDITIONS

Terms and conditions of City of Tacoma purchase orders, if issued, shall apply to contracts and awards resulting from this solicitation.

1.22 RESPONDENT'S REFUSAL TO ENTER INTO CONTRACT

Any Respondent who refuses to enter into a contract after it has been awarded to the Respondent will be in breach of the agreement to enter the contract, and the Respondent's certified or cashiers check or bid bond, if any, shall be forfeited.

1.23 AWARD

The City reserves the right to award contracts for any or all items to one or more respondents in the best interests of the City.

1.24 FINAL AWARD DETERMINATION

The Tacoma City Council or Public Utility Board, for awards over $200,000, shall be the final judge as to which submittal(s) is/are the lowest and best responsible, and best meets the interest of the City of Tacoma to accept. The purchasing manager makes the determination for awards of $200,000 and less.

** Balance of Page Intentionally Left Blank **

GENERAL PROVISIONS for CONSTRUCTION and/or LABOR PROJECTS

1.01 BIDDER'S DUTY TO EXAMINE

The Bidder agrees to be responsible for examining the site(s) and to have compared them with the Specifications and Contract Drawings, and to be satisfied as to the facilities and difficulties attending the execution of the proposed Contract (such as uncertainty of weather, floods, nature and condition of materials to be handled and all other conditions, obstacles and contingencies) before the delivery of his/her Proposal. No allowance will be subsequently made by the City on behalf of the Bidder of any error or neglect on Bidder's part, for such uncertainties as aforesaid.

1.02 CONTRACTOR'S STATE REGISTRATION NO.

If the provisions of Chapter 18.27 of the Revised Code of Washington apply to the Bidder, then the Bidder's Washington State Contractor's Registration No. must accompany the bid.

Prequalified Electrical Contractor

Certain types of electrical construction requires special expertise, experience and prequalification of the Contractor (or Subcontractor) by the City. In such cases the Bidder must be prequalified or the Bidder must subcontract with a City prequalified electrical contractor for the specialty work.

1.03 ASSIGNMENT AND SUBLETTING OF CONTRACT

The Contract shall not be assigned or sublet except with the written consent of the City superintendent or manager responsible for the contract.

Requests for assignment or subletting of this Contract must be in writing with the written consent of the Surety, if applicable, and the request must show the proposed person or organization to which the Contract is assigned is capable, experienced and equipped to perform such work.

The written consent approving the subletting of the Contract shall not be construed to relieve the Contractor of his/her responsibility for the fulfillment of the Contract. The Subcontractor shall be considered to be the agent of the Contractor and the Contractor agrees to be responsible for all the materials, work and indebtedness incurred by the agent.

The Subcontractor shall not submit any portion of a subcontract for work with the City without the written consent of the City.

1.04 PERMITS

Except when modified by the Specifications, the Contractor shall procure and pay for all permits and licenses necessary for the completion of this Contract including those permits required by the City of Tacoma. The City will obtain county or state road crossing permits if required. In the event a necessary permit is not obtained, the Contractor will not be permitted to work on items subject to said permit and any delays caused thereby will not be subject to extra compensation or extensions.

1.05 NOTIFICATION OF OTHER GOVERNMENTAL AGENCIES AND UTILITIES WHEN UNDERGROUND WORK IS INVOLVED

The Contractor shall notify all other affected governmental agencies and utilities whenever underground work is done under the terms of this Contract. The Contractor is required to obtain permission of the appropriate public and private utilities and governmental agencies before performing underground work pursuant to the terms of this Contract. The Contractor shall be required to contact "one call" 1-800-424-555 for all projects requiring excavation greater than 12 inches.

1.06 SURETY BOND/RETAINAGE

For construction/labor type contracts, the Successful Bidder must provide a performance guarantee through one of the following options.

A. Retainage

As provided for in RCW 39.08.010, on contracts of $35,000 or less, in lieu of providing a surety bond, the successful Bidder may agree to have the City retain 50 percent of the contract amount for a period of 30 days after the date of final acceptance, or until receipt of all necessary releases from the Department of Revenue and the Department of Labor and Industries and settlement of any liens filed under chapter 60.28 RCW, whichever is later. If the successful Bidder does not provide a bond, payment will be subject to the retainage provisions as stated above.

B. Surety Bond

The Successful Bidder shall provide bond, including power of attorney, for 100 percent of the amount of his/her bid (excluding sales taxes), to ensure complete performance of the Contract including the guarantee. The bond must be executed by a surety company licensed to do business in the State of Washington. If a bond is requested for a supply type contract, a cashiers' check or cash may be substituted for the bond; however, this cash or cashiers' check must remain with the City through the guarantee period and any interest on said amount shall accrue to the City.

1.07 CONTRACTOR'S INSURANCE

The Contractor shall not commence work under this Contract until all required insurance has been obtained and such insurance has been approved by the City of Tacoma, nor shall the Contractor allow any Subcontractor to commence work on his/her subcontract until all similar insurance required of the Subcontractor has been so obtained. It is the Contractor's responsibility to ascertain that all Subcontractors have the insurance as required by this Contract at all times such Subcontractors are performing the work.

A. Compensation Insurance

The Contractor shall, at all times during the existence of this Contract, fully comply with all of the terms and conditions of the laws of the State of Washington pertaining to Workmen's Compensation together with any and all amendments and supplements thereto and any and all regulations promulgated thereunder.

In the event any of the work herein is sublet, the Contractor shall require such Subcontractor to fully comply with all of the terms and conditions of the laws of the State of Washington pertaining to Workmen's Compensation. In the event of any class or classes of employees engaged in work not covered under the laws of the State of Washington pertaining to Workmen's Compensation, the Contractor shall provide and cause each Subcontractor to provide compensation insurance satisfactory to the City of Tacoma and to the State of Washington in an amount equivalent to that provided by the laws of the State of Washington pertaining to Workmen's Compensation.

B. Public Liability and Property Damage Insurance

The Contractor shall procure and maintain during the life of his/her Contractor, a policy of public liability insurance and property damage insurance, with an insurance carrier licensed to do business in the State of Washington. The policy shall be approved as to form and content by the City Attorney and shall protect the City of Tacoma from liability imposed by law for damages suffered by any persons (1) for bodily injury or death resulting therefrom caused by accidents or occurrences resulting from any act or omission by the Contractor in the performance of the Contract, and (2) for injury to, or destruction of, any property, including property of the City of Tacoma, and resulting from any act or omission by the Contractor in the performance of the Contract.

The City of Tacoma shall be designated in said policy as a named additional insured and shall be given 30 days of notice of cancellation. Said insurance shall indicate that it is "primary" (over and above any insurance the City may have), shall include contractual coverage and shall be in the amounts of not less than $500,000 combined single limit for personal injury including death and property damages per occurrence and/or incident. For Contractors in excess of $100,000 (excluding sales tax) the minimum coverage shall be $1,000,000 combined single limit per occurrence.

If the Contractor fails to maintain such insurance, the City of Tacoma, at is discretion, may procure and maintain such insurance to cover any damages of the above-mentioned classes for which the City of Tacoma may be held liable on account of the Contractor's failure to pay such damages. The City of Tacoma shall then deduct and retain the amount of the premiums from any sums due to the Contractor under this Contract.

Nothing herein contained shall be in any manner construed as limiting the extent to which the Contractor or Subcontractor may be held liable or responsible for payment of damages resulting from their operations.

C. Builder's Risk

The Contractor shall be expected to protect and ensure from loss any tools and equipment owned or rented by the Contractor, Subcontractor of the employees of the Contractor and Subcontractor.

Until the work is completed and accepted by the City of Tacoma, the construction is at the risk of the Contractor and no partial payment shall constitute acceptance of the work or relieve the Contractor of responsibility to delivery to the City of Tacoma the completed project as required by this Contract.

D. Proof of Carriage of Insurance

Before any work is initiated, the Contractor will be required to furnish and file with the City a certificate of insurance coverage. The insurance coverages required herein shall be maintained and effective at all times any work including guarantee work is being performed by the Contractor or a Subcontractor. An up-to-date certificate of insurance must be on file with the City throughout the Contract period.

1.08 SAFETY

The Contractor shall, at all times, exercise adequate precautions for the safety of all persons, including employees, in the performance of this Contract and shall comply with all applicable provisions of federal, state, county and municipal safety laws and regulations. Protective hats shall be worn at all times when an employee is at the job site, except where doing so would interfere with proper performance of the job.

The Contractor shall obtain the necessary line clearance from the Inspector before performing any work in, above, below or across energized Light Division circuits.

The Inspector and/or Engineer may advise the Contractor and the Safety Officer of any safety violations. It is the Contractor's responsibility to make the necessary corrections. Failure to correct safety violations shall be grounds for an order from the Safety Officer, Inspector or Engineer to cease further work and remove from the job site until the condition is corrected. Time and wages lost due to such safety shutdowns shall be at the sole cost of the Contractor and shall not relieve the Contractor of the obligation to complete the work on time.

Any of the above actions by employees of the City of Tacoma shall in no way relieve the Contractor of his/her responsibility to provide for the safety of all persons, including his/her employees.

1.09 PROTECTION OF WORKMEN AND PROPERTY

The Contractor shall erect and maintain good and sufficient guards, barricades and signals at all unsafe places at or near the work and shall, in all cases, maintain safe passageways at all road crossings, and crosswalks, and shall do all other things necessary to prevent accident or loss of any kind.

The Contractor shall protect from damage all utilities, improvements, and all other property that is likely to become displaced or damaged by the execution of the work under this Contract.

The Contractor is responsible for all roads and property damaged by his/her operations as shall be determined by the Engineer administering this Contract. The Contractor shall be responsible for repairing all damage to roads caused by his/her operations to the satisfaction of the particular governmental body having jurisdiction over the road.

1.10 CONTRACTOR - SUPERVISION AND CHARACTER OF EMPLOYEES

A. Superintendent to Supervise Contractor's Employees

The Contractor shall keep on his/her work, during its progress, a competent superintendent and any necessary assistants, all of whom must be satisfactory to the City of Tacoma. The Contractor's superintendent shall not be changed except with the consent of the City of Tacoma, unless the Contractor's superintendent proves to be unsatisfactory to the Contractor and ceases to be in his/her employ. The Contractor's superintendent shall represent the Contractor in his/her absence and all directions given to him/her shall be binding as if given to the Contractor directly. The Contractor shall give efficient supervision to the work, using his/her best skill and attention.

B. Character of Contractor's Employees

The Contractor shall employ only competent, skillful, faithful and orderly persons to do the work and, whenever the Engineer administering the Contract shall notify the Contractor in writing that any person on the work is, in his or her opinion. incompetent, unfaithful, disorderly or otherwise unsatisfactory, the Contractor shall forthwith discharge such persons from the work and shall not again employ him or her on this contract.

1.11 CONTRACTOR'S COMPLIANCE WITH THE LAW

A. Hours of Labor

The Contractor and Subcontractors shall be bound by the provisions of RCW Chapter 49.28 (as amended) relating to hours of labor. Except as set forth in the Specifications, eight (8) hours in any calendar day shall constitute a day's work on a job performed under this Contract.

In the event that the work is not performed in accordance with this provision and in accordance with the laws of the State of Washington, then this Contract may be terminated by the City of Tacoma for the reason that the same is not performed in accordance with the public policy of the State of Washington as defined in said statutes.

B. Prevailing Wages

The Contractor and any Subcontractors shall be bound by the provisions of Chapter 39.12 RCW, as amended, relating to prevailing wages and usual fringe benefits. No workman, laborer, or mechanic employed in the performance of any part of this Contract shall be paid less than the "prevailing wage" as determined by the Industrial Statistician of the Department of Labor and Industries. The schedule of the prevailing wage rates for the locality or localities where this Contract will be performed is by reference made a part of this Contract as though fully set forth herein. Current prevailing wage data will be furnished by the Industrial Statistician upon request. The Contractor shall immediately upon award of the Contract, contact the Department of Labor and Industries, ESAC Division, General Administration Building, Olympia, Washington 98504, to obtain full information, forms and procedures relating to these matters.

Before payment is made by or on behalf of the city, of any sum or sums due on account of a Public Works contract, it shall be the duty of the officer or person charged with the custody and disbursement of public funds to require the Contractor and each and every Subcontractor from the Contractor or a Subcontractor to submit to such officer a "Statement of Intent to Pay Prevailing Wages." Each Statement of Intent to Pay Prevailing Wages must be approved by the Industrial Statistician of the Department of Labor and Industries before it is submitted to said officer. Unless otherwise authorized by the Department of Labor and Industries each voucher claim submitted by a Contractor for payment on a project estimate shall state that the prevailing wages have been paid in accordance with the prefiled statement or statements of intent to pay prevailing wages on file with the public agency. Following the final acceptance of a Public Works project, it shall be the duty of the officer charged with disbursement of public funds to require the Contractor and each and every Subcontractor from the Contractor or a Subcontractor to submit to such officer an "Affidavit of Wages Paid" before the funds retained according to the provisions of RCW 60.28.010 are released to the Contractor. Each affidavit of wages paid must be certified by the Industrial Statistician of the Department of Labor and Industries before it is submitted to said officer.

In the event any dispute arises as to what are the prevailing rates of wages for work of a similar nature and such dispute cannot be adjusted by the parties in interest, including labor and management representatives, the matter shall be referred for arbitration to the Director of the State of Washington, Department of Labor and Industries, whose decision shall be final, conclusive and binding on all parties involved in the dispute.

1.12 CLEANING UP

The Contractor shall at all times, at his/her own expense, keep the premises free from accumulation of waste materials or debris caused by any workers or the work. At the completion of the work the Contractor shall remove all waste materials from and about the site and all his/her equipment, sanitary facilities and surplus materials. In the case of dispute, the City of Tacoma may remove the debris and charge the cost to the Contractor as the City of Tacoma shall determine to be just. All material that is deposited or placed elsewhere than in places designated or approved by the Engineer administering the Contract will not be paid for and the Contractor may be required to remove such material and deposit or place it where directed.

1.13 INSPECTION

A. Of the Work

All materials furnished and work done shall be subject to inspection.

The Inspector administering the Contract shall at all times have access to the work wherever it is in progress or being performed, and the Contractor shall provide proper facilities for such access and inspection. Such inspection shall not relieve the Contractor of the responsibility of performing the work correctly, utilizing the best labor and materials in strict accordance with the Specifications of this Contract. All material or work approved and later found to be defective shall be replaced without cost to the City of Tacoma.

B. Inspector's Authority

The Inspector shall have power to reject materials or workmanship which do not fulfill the requirements of these Specifications, but in case of dispute the Contractor may appeal to the Superintendent of the Division administering the Contract, whose decision shall be final.

The Contract shall be carried out under the general control of the representative of the particular Division administering the Contract, who may exercise such control over the conduct of the work as may be necessary, in his or her opinion, to safeguard the interest of the City of Tacoma. The Contractor shall comply with any and all orders and instructions given by the representative of the particular Division administering the Contract in accordance with the terms of the Contract.

Nothing herein contained, however, shall be taken to relieve the Contractor of his/her obligations or responsibilities under the Contract.

1.14 INDEMNIFICATION

A. Indemnification

Contractor acknowledges that pursuant to the terms of this agreement, Contractor is totally responsible for the safety of all persons and property in the performance of this Contract. To the greatest extent allowed by law, Contractor assumes the risk of all damages, loss, cost, penalties and expense and agrees to indemnify, defend and hold harmless the City of Tacoma, from and against any and all liability which may accrue to or be sustained by the City of Tacoma on account of any claim, suit or legal action made or brought against the City of Tacoma for the death of or injury to persons (including Contractor's or Subcontractor's employees) or damage to property involving Contractor, of Subcontractor(s) and their employees or agents, arising out of and in connection with or incident to the performance of the Contract except for injuries or damages caused by the sole negligence of the City. In this regard, Contractor recognizes that Contractor is waiving immunity under Industrial Insurance Law, Title 51 RCW. Contractor acknowledges that this indemnification provision has been mutually negotiated within the context of competitive bidding laws. This indemnification extends to the officials, officers and employees of the City and also includes attorney's fees and the cost of establishing the right to indemnification hereunder in favor of the City of Tacoma. Provided, however, this provision is intended to be applicable to the parties to this agreement and it shall not be interpreted to allow a Contractor's employee to have a claim or cause of action against Contractor.

B. Limitation of Liability for Primarily Supply-Type Contracts

All Contracts where the total cost of the supply of materials and/or equipment constitute at least 70 percent of the total Contract price (as determined by the City), then the City agrees that it will not hold the Contractor, supplier or manufacturer liable for consequential damages for that part of the Contract related to the manufacture and/or design of the equipment, materials or supplies.

1.15 GUARANTEE

Guarantee for Construction, Labor or Services Contract

Neither the final certificate of payment or any provision in the Contract Documents, nor partial or entire occupancy of the premises by the City, shall constitute an acceptance of work not done in accordance with the Contract Documents or relieve the Contractor of liability in respect to any express warranties or responsibility for faulty materials or workmanship. The Contractor shall remedy any defects in the work and pay for any damage to other work resulting

therefrom, which shall appear within a period of one year from the date of final acceptance of the work unless a longer period is specified. The City will give notice of observed defects with reasonable promptness.

If it has been discovered, before payment is required, under the terms of the Contract, that there is a failure to comply with any of the terms and provisions of this Contract, the City has the right and may withhold payment.

In case of a failure of any part of the work, materials, labor and equipment furnished by the Contractor to fully meet all of the requirements of the Contract, the Contractor shall make such changes as may be necessary to fully meet all of the specifications and requirements of this Contract. Such changes shall be made at the Contractor's sole cost and expense without delay and with the least practicable inconvenience o the City of Tacoma. Rejected material and equipment shall be removed from the City's property by and at the expense of the Contractor.

1.16 DEDUCTIONS FOR UNCORRECTED WORK

If the City of Tacoma deems it expedient to correct work not done in accordance with the terms of this Contract, an equitable deduction from the Contract price shall be made.

1.17 CITY OF TACOMA'S RIGHT TO TERMINATE CONTRACT

The City of Tacoma may serve written notice upon the Contractor and Surety, executing the Performance Bond, of its intention to terminate the Contract; such notice will contain the reasons for termination of the Contract and, unless within ten (10) days after the serving of such notice, such violation shall cease and an arrangement satisfactory to the City of Tacoma for correction thereof shall be made, the Contract shall, upon the expiration of said ten (10) days, cease and terminate and all rights of the Contractor hereunder shall be forfeited.

If a Performance Bond was provided, upon such termination, the Surety shall have the right to take over and perform the Contract, provided, however, the Surety must provide written notice to the City of its intent to complete the work within 15 calendar days of its receipt of the original written notice (from the City) of the intent to terminate. Upon termination and if the Surety does not perform the work, the City of Tacoma may take over the work and prosecute the same to completion by any method it may deem advisable, for the account of and at the expense of the Contractor, and the Contractor and the Surety shall be liable to the City of Tacoma for all cost occasioned to the City of Tacoma thereby. The City of Tacoma may, without liability for doing so, take possession of an utilize in completing the work, such materials, equipment, plant and other property belonging to the Contractor as may be on the site of the work and necessary therefore.

1.18 LIENS

In the event that there are any liens on file against the City of Tacoma, the City of Tacoma shall be entitled to withhold final or progress payments to the extent deemed necessary by the City of Tacoma to properly protect the outstanding lien claimants until proper releases have been filed with the City Clerk.

1.19 CITY RESERVES RIGHT TO USE FACILITIES PRIOR TO ACCEPTANCE

The City of Tacoma hereby reserves the right to use the facilities herein contracted prior to final acceptance under this Contract. The use of said facilities, as mentioned herein, shall not be construed as a wavier or relinquishment of any rights that the City of Tacoma has under this Contract.

1.20 UNDERGROUND EXCAVATION

The City may have indicated on the plans and specifications the existence of certain underground facilities that are known to the City division responsible for this Contract. It is the Contractor's responsibility to fully comply with the Underground Utility Locate Law, Chapter 19.122 RCW. If the site conditions are "changed or differing" as defined by RCW 19.122.040(1), the Contractor may pursue the party responsible for not properly marking or identifying the underground facility. The Contractor agrees not to file any claim or legal action against the City (division responsible for this Contract) for said "changed or differing" conditions unless said City division is solely responsible for the delay or damages that the Contractor may have incurred.

SPECIFICATION NO. PW14-0699N

TABLE OF CONTENTS

NOTE: ALL BIDDERS MUST HAVE A COPY OF THE SPECIFICATIONS AND THE BID SUBMITTAL PACKAGE

REQUEST FOR BIDS

STANDARD TERMS AND CONDITIONS SECTION 1 – SOLICITATION

SPECIAL REMINDER TO ALL BIDDERS

SPECIAL NOTICE TO BIDDERS

PART I BID PROPOSAL AND CONTRACT FORMS

1 Bid Proposal
2 Signature Page
3 Bid Bond
4 State Responsibility and Reciprocal Bid Preference Information
5 Contract
6 Performance Bond
7 Insurance
8 General Release Form

PART II STATE AMENDMENTS TO THE STANDARD SPECIFICATIONS

PART III SPECIAL PROVISIONS

Division 1 General Requirements
Division 2 Earthwork
Division 3 Production from Quarry and Pit Sites and Stockpiling (Vacant)
Division 4 Bases
Division 5 Surface Treatments and Pavements
Division 6 Structures
Division 7 Drainage Structures, Storm Sewers, Sanitary Sewers, Water Mains, and Conduits
Division 8 Miscellaneous Construction
Division 9 Materials
Appendix A City of Tacoma and WSDOT Standard Plans

PART IV CITY OF TACOMA – SMALL BUSINESS ENTERPRISE
SBE Utilization Form 6 City of Tacoma
Prime Contractor's Pre-Work Form

PART V STATE PREVAILING WAGE RATES

PART VI PLANS

SPECIAL REMINDER TO ALL BIDDERS

PLEASE NOTE: Be sure you have complied with all specifications and requirements and have signed or have caused to be signed all required instruments.

YOUR ATTENTION IS PARTICULARLY CALLED to the following forms, which must be executed in full before the bid is submitted:

1. BID PROPOSAL: The unit prices bid must be shown in the space provided. Be sure to check your computations for omissions and errors.

2. SIGNATURE PAGE: To be filled in and signed by the bidder. Be sure all parties whose signatures are legally necessary have signed, whether the bidder be an individual, partnership or corporation.

3. BID BOND: The Bid Bond must be executed by the person legally authorized to sign the bid, and must be properly signed by the representatives of the surety company unless the bid is accompanied by a certified check. If Bid Bond is furnished, the form furnished by the City must be followed; no variations from the language thereof will be accepted. The amount of the Bid Bond must be not less than 5% of the total amount bid; and, if shown in dollars and cents, the amount of said Bid Bond must be not less than the required 5%.

4. STATE RESPONSIBILITY AND RECIPROCAL BID PREFERENCE INFORMATION: The bidder shall complete this form in its entirety to ensure compliance with state legislation (SHB 2010).

5. SMALL BUSINESS ENTERPRISE (SBE):

   General: Small Business Enterprise forms must be fully and accurately completed and returned at the time of the submission of bids. Failure to do so may result in the bid being considered non-responsive. These forms are necessary in order to determine if the bidder complies with Chapter 10.26 of the City of Tacoma Municipal Code and State Law.

   The SBE goal for this project is 10 percent.

   The following steps shall be used to determine the level of SBE Usage:

   a. The low bidder who meets the City's participation goal, for SBE, shall be presumed to have met the requirement.
   b. Otherwise the bidder who has the lowest evaluated bid based on the formula set forth below:

$$(BaseBid) - \left[\frac{SBE\ Usage\ Percentage}{SBE\ Goal\ Percentage}\ x\ (.05\ x\ Low\ Base\ Bid) \right] = Evaluated\ Bid$$

shall be presumed to have met the requirement and may be recommended for award.

NOTE: The ratio of SBE usage to the SBE goal in this formula above shall not exceed 1.

For the purposes of determining the Evaluated Bid all alternates, additives and deductives selected by the City will be added to your base bid as indicated in the proposal.

Contractors are also subject to the City's ordinance and regulations prohibiting discrimination. If needed, please contact the SBE Office at (253) 502-8072 or (253) 594-7933 for assistance. The list of SBE subcontractors is available at: www.cityoftacoma.org/SBE.

All bidders must complete and submit with their bid the following forms contained in the Bid Submittal Package:

City of Tacoma – Prime Contractor's Pre-Work Form
City of Tacoma – SBE Utilization Form

FAILURE TO COMPLETE AND SUBMIT THE FORMS WITH THE BID SUBMITTAL PACKAGE MAY RESULT IN THE BID BEING DECLARED UNRESPONSIVE AND REJECTED.

6. EQUAL EMPLOYMENT OPPORTUNITIES: The City of Tacoma's Prime Contractor's Pre-Work Form shall be completed by the bidder and submitted with the bid. This form is used to determine the bidder's EEO practices in accordance with E.O. 11246 and TMC 10.26.

POST AWARD FORMS: For the bidder's information, the following forms are to be executed after the contract is awarded:

A. CONTRACT and INSURANCE: Must be executed by the successful bidder.
B. PERFORMANCE BOND: Must be executed by the successful bidder and his/her surety company.
C. GENERAL RELEASE

CODE OF ETHICS: The successful bidder agrees that its violation of the City's Code of Ethics contained in Chapter 1.46 of the Tacoma Municipal Code shall constitute a breach of the contract subjecting the contract to termination.

CITY OF TACOMA
Finance/Purchasing Division

SPECIAL NOTICE TO BIDDERS

Public works and improvement projects for the City of Tacoma are subject to Washington state law and Tacoma Municipal Code, including, but not limited to the following:

I. STATE OF WASHINGTON

A. RESPONSIBILITY CRITERIA – STATE OF WASHINGTON

In order to be considered a responsible bidder the bidder must meet the following mandatory state responsibility criteria contained in RCW 39.04.350:

1. Have a current certificate of registration as a contractor in compliance with chapter 18.27 RCW, which must have been in effect **at the time of bid submittal**;
2. Have a current Washington Unified Business Identifier (UBI) number;
3. If applicable:
   a. Have Industrial Insurance (workers' compensation) coverage for the bidder's employees working in Washington, as required in Title 51 RCW;
   b. Have a Washington Employment Security Department number, as required in Title 50 RCW;
   c. Have a Washington Department of Revenue state excise tax registration number, as required in Title 82 RCW;
4. Not be disqualified from bidding on any public works contract under RCW 39.06.010 (unlicensed or unregistered contractors) or 39.12.065(3) (prevailing wage); and
5. Until December 31, 2013, not have violated more than one time the off-site, prefabricated, non-standard, project specific items reporting requirements of RCW 39.04.370.

B. RECIPROCAL PREFERENCE FOR RESIDENT CONTRACTORS:

Effective March 30, 2012, RCW 39.04.380 imposes a reciprocal preference for resident contractors. Any bid received from a non-resident contractor from a state that provides an in-state percentage bidding preference is subject application of a comparable percentage disadvantage.

A non-resident contractor from a state that provides an in-state percentage bidding preference means a contractor that:

1. Is from a state that provides a percentage bid preference to its resident contractors bidding on public works projects, and
2. Does not have a physical office located in Washington at the time of bidding on the City of Tacoma public works project.

The state of residence for a non-resident contractor is the state in which the contractor was incorporated, or if not a corporation, the state in which the contractor's business entity was formed.

The City of Tacoma will evaluate all non-resident contractors for an out of state bidder preference. If the state of the non-resident contractor provides an in state contractor preference, a comparable percentage disadvantage will be applied to the non-resident

contractor's bid prior to contract award. The responsive and lowest and best responsible bidder after application of any non-resident disadvantage will be awarded the contract.

The reciprocal preference evaluation does not apply to public works procured pursuant to RCW 39.04.155, RCW 39.04.280, federally funded competitive solicitations where such agencies prohibit the application of bid preferences, or any other procurement exempt from competitive bidding.

Bidders must provide the City of Tacoma with their state of incorporation or the state in which the business entity was formed and include whether the bidder has a physical office located in Washington.

The bidder shall submit documentation demonstrating compliance with above criteria on the enclosed State Responsibility and Reciprocal Bidder Information form.

C. REPORTING OFF-SITE, PREFABRICATED, NON-STANDARD, PROJECT SPECIFIC ITEMS

1. For contracts entered into between September 1, 2010, and December 31, 2013, RCW 39.04.370 requires all "Off-Site Prefabricated Non-Standard Project Specific Items" shall be identified for projects valued at one million dollars or more. "Off-site, prefabricated, nonstandard, project specific items" means products or items that are:

    a. Made primarily of architectural or structural precast concrete, fabricated steel, pipe and pipe systems, or sheet metal and sheet metal duct work;
    b. Produced specifically for the public work and not considered to be regularly available shelf items;
    c. Produced or manufactured by labor expended to assemble or modify standard items;
    d. Produced at an off-site location outside of Washington.

2. The Contractor or Subcontractor(s) contracting for "Off-Site Prefabricated Non- Standard Project Specific Items" shall comply with the Department of Labor and Industries reporting requirements and instructions on the affidavit of wages paid form. The information to be provided to the Department of Labor and Industries shall include:

    a. The estimated cost of the public works project;
    b. The name of the awarding agency and the project title;
    c. The contract value of the off-site, prefabricated, nonstandard, project specific items produced outside Washington, including labor and materials;
    d. The name, address and federal employer identification number of the contractor that produced the off-site, prefabricated, nonstandard, project specific items.

The Contractor or Subcontractor directly contracting for the off-site prefabricated items must submit this information as part of the affidavit of wages paid form filed with the Department of Labor and Industries. Contractors found to be out of compliance with the Department of Labor and Industries may be rejected as non-responsible.

The City may direct the Contractor, at no additional cost to the City, to remove and substitute any Subcontractor(s) found to be out of compliance with the "Off-Site Prefabricated Non-Standard Project Specific Items" reporting requirements more than one time as determined by the Department of Labor and Industries.

D. SUBCONTRACTOR RESPONSIBILITY

1. The Contractor shall include the language of this subcontractor responsibility section in each of its first tier subcontracts, and shall require each of its subcontractors to include the same language of this section in each of their subcontracts, adjusting only as necessary the terms used for the contracting parties. The requirements of this section apply to all subcontractors regardless of tier.

2. At the time of subcontract execution, the Contractor shall verify that each of its first tier subcontractors meets the following bidder responsibility criteria:

    a. Have a current certificate of registration as a contractor in compliance with chapter 18.27 RCW, which must have been in effect at the time of subcontract bid submittal;

    b. Have a current Washington Unified Business Identifier (UBI) number;

    c. If applicable, have:

    a. Have Industrial Insurance (workers' compensation) coverage for the bidder's employees working in Washington, as required in Title 51 RCW;
    b. A Washington Employment Security Department number, as required in Title 50 RCW;
    c. A Washington Department of Revenue state excise tax registration number, as required in Title 82 RCW;
    d. An electrical contractor license, if required by Chapter 19.28 RCW;
    e. An elevator contractor license, if required by Chapter 70.87 RCW.

1. Not be disqualified from bidding on any public works contract under RCW 39.06.010 (unlicensed or unregistered contractors) or 39.12.065(3) (prevailing wage);

2. Until December 31, 2013, not have violated more than one time the off-site, prefabricated, non-standard, project specific items reporting requirements of RCW 39.04.370.

II. CITY OF TACOMA

A. SUPPLEMENTAL RESPONSIBILITY CRITERIA – CITY OF TACOMA:

In order to be considered a responsible bidder, the prospective bidder shall have all of the following qualifications set forth in Tacoma Municipal Code 1.06.262:

1. Adequate financial resources or the ability to secure such resources;
2. The necessary experience, stability, organization and technical qualifications to perform the proposed contract;
3. The ability to comply with the required performance schedule, taking into consideration all existing business commitments;
4. A satisfactory record of performance, integrity, judgment and skills; and
5. Be otherwise qualified and eligible to receive an award under applicable laws and regulations.
    a. Bidder Responsibility. Bidders shall not be in violation of 39.04.350 RCW Bidder Responsibility Criteria - Supplemental Criteria.

In addition to the mandatory bidder responsibility criteria listed immediately above, the City may, in addition to price, consider any or all of the following criteria contained in Tacoma Municipal Code Chapter 1.06.262 in determining bidder responsibility:

1. The ability, capacity, experience, stability, technical qualifications and skill of the respondent to perform the contract;
2. Whether the respondent can perform the contract within the time specified, without delay or interference;
3. Integrity, reputation, character, judgment, experience, and efficiency of the respondents, including past compliance with the City's Ethics Code;
4. Quality of performance of previous contracts;
5. Previous and existing compliance with laws and ordinances relating to contracts or services;
6. Sufficiency of the respondent's financial resources;
7. Quality, availability, and adaptability of the supplies, purchased services or public works to the particular use required;
8. Ability of the respondent to provide future maintenance and service on a timely basis;
9. Payment terms and prompt pay discounts;
10. The number and scope of conditions attached to the submittal;
11. Compliance with all applicable City requirements, including but not limited to the City's Ethics Code and its Historically Underutilized Business and Local Employment and Apprenticeship programs;
12. Other qualification criteria set forth in the specification or advertisement that the appropriate department or division head determines to be in the best interests of the City.

The City may require bidders to furnish information, sworn or certified to be true, to demonstrate compliance with the City responsibility criteria set forth above. If the city manager or director of utilities is not satisfied with the sufficiency of the information provided, or if the prospective respondent does not substantially meet all responsibility requirements, any submittal from such respondent must be disregarded.

B. DETERMINATION OF BIDDER RESPONSIBILITY

If the City determines the bidder does not meet the criteria above and is therefore not a responsible bidder, the City shall notify the bidder in writing with the reasons for its determination. If the bidder disagrees, the bidder may appeal the determination in a manner consistent with the City's Protest Policy. Appeals are coordinated by the Purchasing Division heard by the Procurement and Payables Division manager for contracts less than or equal to $200,000 and by Contracts and Awards Board for contracts greater than $200,000.

PART I

BID PROPOSAL AND CONTRACT FORMS

B I D P R O P O S A L

SPECIFICATION NO. PW14-0699N

ADA IMPROVEMENTS PHASE 2

Project No. CIP-00030-04

PEOPLES COMMUNITY CENTER

PANTAGES THEATER

RIALTO THEATER

SWASEY BRANCH LIBRARY

The undersigned hereby certifies that he/she has examined the location and construction details of work as outlined on the Plans and Specifications for Project No. CIP-00030-04 and has read and thoroughly understands the Plans and Specifications and contract governing the work embraced in this improvement and the method by which payment will be made for said work, and hereby proposes to undertake and complete the work embraced in this improvement in accordance with said Plans, Specifications and contract and at the following schedule of rates and prices:

NOTE: 1. Unit prices of all items, all extensions and total amount of bid should be shown. Show unit prices in figures only.

2. The notations below the item numbers refer to the specification section where information may be found regarding each contract item. These notations are intended only as a guide and are not warranted to refer to all specification sections where information may be found.

ITEM NO.	ITEM DESCRIPTION	ESTIMATED QUANTITY	UNIT PRICE	TOTAL AMOUNT
	Base Bid Items 1 – 39			
1. 1-07.15(1)	SPCC Plan, per lump sum	1 Lump Sum	Lump Sum	$ _____
2. 1-07.23(2)	Pedestrian Control and Protection, per lump sum	1 Lump Sum	Lump Sum	$ _____
3. 1-09.7	Mobilization, per lump sum	1 Lump Sum	Lump Sum	$ _____

Bidder Name: _____

ITEM NO.	ITEM DESCRIPTION	ESTIMATED QUANTITY	UNIT PRICE	TOTAL AMOUNT
4. 1-09.6	Force Account	1 Force Account	Estimated	$ 5,000.00
5. 1-10	Project Temporary Traffic Control, per lump sum	1 Lump Sum	Lump Sum	$ _____
6. 2-01	Clearing and Grubbing, per lump sum	1 Lump Sum	Lump Sum	$ _____
7. 2-13	Remove Tree, Class I, per each	3 Each	$ _____	$ _____
8. 2-14	Remove Existing Pavement, Type 1, Class A2, per square yard	312 Sq. Yd.	$ _____	$ _____
9. 2-14	Remove Existing Pavement, Type 1, Class A4, per square yard	14 Sq. Yd.	$ _____	$ _____
10. 2-14	Remove Existing Pavement, Type 1, Class C6, per square yard	166 Sq. Yd.	$ _____	$ _____
11. 2-15	Remove Curb, per linear foot	78 Lin. Ft.	$ _____	$ _____
12. 2-15	Remove Curb and Gutter, per linear foot	62 Lin. Ft.	$ _____	$ _____
13. 2-15	Remove Extruded/Precast Curb, per linear foot	48 Lin. Ft.	$ _____	$ _____
14. 4-04	Crushed Surfacing Top Course, per ton	70 Ton	$ _____	$ _____
15. 5-04	HMA Cl. ½" PG 64-22, per ton	49 Ton	$ _____	$ _____
16. 8-01	Stormwater Pollution Prevention Plan (SWPPP), per lump sum	1 Lump Sum	Lump Sum	$ _____
17. 8-01	Erosion/Water Pollution Control, per lump sum	1 Lump Sum	Lump Sum	$ _____
18. 8-01	Inlet Protection, per each	6 Each	$ _____	$ _____
19. 8-02	Topsoil Type A, per cubic yard	4 Cu. Yd.	$ _____	$ _____

Bidder Name: _____

ITEM NO.	ITEM DESCRIPTION	ESTIMATED QUANTITY	UNIT PRICE	TOTAL AMOUNT
20. 8-02	Bark or Wood Chip Mulch, per cubic yard	8 Cu. Yd.	$ _____	$ _____
21. 8-02	Sod Installation, per square yard	20 Sq. Yd.	$ _____	$ _____
22. 8-02	Plant Selection Including Plant Establishment Ulmus Carpinifolia x Parvifolia 'Frontier' or Zelkova Serrata 'Green Vase', 2-Inch Caliper, Full Branching, per each	1 Each	$ _____	$ _____
23. 8-02	Plant Selection Including Plant Establishment, Kinnickinnick (Arctostaphylos Uva-Ursi), 1 Gallon, per each	35 Each	$ _____	$ _____
24. 8-04	Irrigation System, per lump sum	1 Lump Sum	Lump Sum	$ _____
25. 8-04	Cement Conc. Traffic Curb, per linear foot	138 Lin. Ft.	$ _____	$ _____
26. 8-04	Extruded Curb, per linear foot	80 Lin. Ft.	$ _____	$ _____
27. 8-04	Cement Conc. Pedestrian Curb, per linear foot	94 Lin. Ft.	$ _____	$ _____
28. 8-04	Precast Concrete Wheel Stop, per each	4 Each	$ _____	$ _____
29. 8-14	Cement Conc. Sidewalk, per square yard	184 Sq. Yd.	$ _____	$ _____
30. 8-20	Adjust Light Pole, per each	1 Each	$ _____	$ _____
31. 8-20	Replace/Adjust Junction Box, per each	1 Each	$ _____	$ _____
32. 8-21	Permanent Signing, per lump sum	1 Lump Sum	Lump Sum	$ _____
33. 8-22	Remove Painted Traffic Marking, per each	1 Each	$ _____	$ _____

ITEM NO.	ITEM DESCRIPTION	ESTIMATED QUANTITY	UNIT PRICE	TOTAL AMOUNT
34. 8-22	Plastic Access Parking Space Symbol With Background, per each	9 Each	$ _____	$ _____
35. 8-22	Plastic Stop Line, per linear foot	108 Lin. Ft.	$ _____	$ _____
36. 8-22	Plastic Traffic Arrow, per each	1 Each	$ _____	$ _____
37. 8-22	Plastic Line, per linear foot	36 Lin. Ft.	$ _____	$ _____
38. 8-22	Painting Curb, per linear foot	61 Lin. Ft.	$ _____	$ _____
39. 8-30	Steel Pipe Hand Rail, per linear foot	70 Lin. Ft.	$ _____	$ _____
	NET TOTAL			$ _____
TOTAL (include tax 9.5%)			**(1 – 39) $**	_____

Bidder Name: _____
Specification No. PW14-0699N

SIGNATURE PAGE

CITY OF TACOMA DEPARTMENT OF PUBLIC WORKS

All submittals must be in ink or typewritten and must be executed by a duly authorized officer or representative of the bidding/proposing entity. If the bidder/proposer is a subsidiary or doing business on behalf of another entity, so state, and provide the firm name under which business is hereby transacted.

Submittals will be received and time stamped only at the City of Tacoma Purchasing Division, located in the Tacoma Public Utilities Administration North Building, Main Floor, at 3628 South 35th Street, Tacoma, WA 98409. **See the Request for Bids page near the beginning of the specification for additional details.**

REQUEST FOR BIDS SPECIFICATION NO. PW14-0699N
ADA Improvement Phase 2

The undersigned bidder/proposer hereby agrees to execute the proposed contract and furnish all materials, labor, tools, equipment and all other facilities and services in accordance with these specifications.

The bidder/proposer agrees, by submitting a bid/proposal under these specifications, that in the event any litigation should arise concerning the submission of bids/proposals or the award of contract under this specification, Request for Bids, Request for Proposals or Request for Qualifications, the venue of such action or litigation shall be in the Superior Court of the State of Washington, in and for the County of Pierce.

Non-Collusion Declaration

The undersigned bidder/proposer hereby certifies under penalty of perjury that this bid/proposal is genuine and not a sham or collusive bid/proposal, or made in the interests or on behalf of any person or entity not herein named; and that said bidder/proposer has not directly or indirectly induced or solicited any contractor or supplier on the above work to put in a sham bid/proposal or any person or entity to refrain from submitting a bid/proposal; and that said bidder/proposer has not, in any manner, sought by collusion to secure to itself an advantage over any other contractor(s) or person(s).

_____
Bidder/Proposer's Registered Name

_____
Address

_____
City, State, Zip

_____
E-Mail Address

_____
E.I.No. / Federal Social Security Number Used on Quarterly Federal Tax Return, U.S. Treasury Dept. Form 941

_____
Signature of Person Authorized to Enter into Contracts for Bidder/Proposer Date

_____
Printed Name and Title

_____
(Area Code) Telephone Number / Fax Number

_____
State Business License Number
in WA, also known as UBI (Unified Business Identifier) Number

_____
State Contractor's License Number
(See Ch. 18.27, R.C.W.)

Addendum acknowledgement (if applicable) #1_____ #2_____

THIS PAGE MUST BE SIGNED AND RETURNED WITH SUBMITTAL.

Herewith find deposit in the form of a cashier's check in the amount of $_____ which amount is not less than 5-percent of the total bid.

SIGN HERE_____

BID BOND

KNOW ALL MEN BY THESE PRESENTS:

That we, _____, as Principal, and _____, as Surety, are held and firmly bound unto the City of Tacoma, as Obligee, in the penal sum of _____ _____ dollars, for the payment of which the Principal and the Surety bind themselves, their heirs, executors, administrators, successors and assigns, jointly and severally, by these presents.

The condition of this obligation is such that if the Obligee shall make any award to the Principal for

according to the terms of the proposal or bid made by the Principal therefor, and the Principal shall duly make and enter into a contract with the Obligee in accordance with the terms of said proposal or bid and award and shall give bond for faithful performance thereof, with Surety or Sureties approved by the Obligee; or if the Principal shall, in case of failure to do so, pay and forfeit to the Obligee the penal amount of the deposit specified in the call for bids, then this obligation shall be null and void; otherwise it shall be and remain in full force and effect and the Surety shall forthwith pay and forfeit to the Obligee, as penalty and liquidated damages, the amount of this bond.

SIGNED, SEALED AND DATED THIS _____ DAY OF _____, 20_____.

PRINCIPAL: SURETY:

_____ _____

_____ _____

_____, 20_____

Received return of deposit in the sum of $ _____

_____

Specification No. _____

_____
Name of Bidder

State Responsibility and Reciprocal Bid Preference Information

Certificate of registration as a contractor (must be in effect at the time of bid submittal):	Number:_____ Effective Date:_____ Expiration Date:_____
Current Washington Unified Business Identifier (UBI) number:	Number:_____
Do you have industrial insurance (workers' compensation) coverage for your employees working in Washington?	☐ Yes ☐ No ☐ Not Applicable
Washington Employment Security Department number:	Number:_____ ☐ Not Applicable
Washington Department of Revenue state excise tax registration number:	Number:_____ ☐ Not Applicable
Have you been disqualified from bidding on any public works contracts under RCW 39.06.010 or 39.12.065(3)?	☐ Yes ☐ No If yes, provide an explanation of your disqualification on a separate page.
Do you have a physical office located in the state of Washington?	☐ Yes ☐ No
If incorporated, in what state were you incorporated?	State: _____ ☐ Not Incorporated
If not incorporated, in what state was your business entity formed?	State: _____

CONTRACT

Resolution No.
Contract No.

THIS AGREEMENT made and entered into in triplicate by and between the City of Tacoma, a Municipal Corporation hereinafter called the "City", and

Enter vendor name herein after called the "Contractor."

WITNESSETH:

That in consideration of the terms and conditions contained herein and attached and made a part of this Agreement, the Parties hereto covenant and agree as follows:

I. The Contractor shall do all work and furnish all tools, materials, and equipment in accordance with and as described herein and in the attached plans, drawings, and the below referenced Specifications of the City of Tacoma included in the solicitation of Bids for this Agreement, which are by this reference incorporated herein and made a part hereof, and shall perform any alteration in or additions to the work provided under this Agreement and every part thereof.

Specification No. enter spec number
Project: enter spec name
Contract Total: $, Select applicable tax information

The Contractor shall provide and bear the expense of all equipment, work and labor of any sort whatsoever that may be required for the transfer of materials and for constructing and completing the work provided for in this Agreement and every part thereof, except such as are mentioned in the Specifications to be furnished by the City of Tacoma.

II. The Contractor acknowledges, and by signing this Agreement agrees, that the Indemnification provisions set forth in the Specifications, including the Industrial Insurance immunity waiver (if applicable), are totally and fully part of this Agreement and, within the context of the competitive bidding laws, have been mutually negotiated by the Parties hereto.

III. The Contractor, for him/herself, and for his/her heirs, executors, administrators, successors, and assigns, does hereby agree to the full performance of all the covenants herein contained upon the part of the Contractor.

IV. It is further provided that no liability shall attach to the City by reason of entering into this Agreement, except as expressly provided herein.

V. The Contractor agrees to accept as full payment hereunder the amounts specified in the Submittal, and the City agrees to make payments at the times and in the manner and upon the terms and conditions specified in said Submittal and in the attached plans, drawings, and Specifications.

IN WITNESS WHEREOF, the Parties hereto have caused this Agreement to be executed, with an effective date for bonding purposes of Enter date day of Enter month, 20year.

CITY OF TACOMA:

By: _____
Title of dept or div staff w/auth to sign for this $ amt

By: _____
Select one (for contract totals over $50K or NA)

By: _____
Director of Finance

PRINCIPAL: Enter vendor name

By: _____
Signature

_____
Printed Name

_____
Title

APPROVED AS TO FORM:

By: _____
City Attorney

SAMPLE

PERFORMANCE BOND
TO THE CITY OF TACOMA

Resolution No.
Bond No.

KNOW ALL MEN BY THESE PRESENTS:

That we, the undersigned, _____

as principal, and _____

a corporation organized and existing under the laws of the State of _____

as a surety corporation, and qualified under the laws of the State of Washington to become surety upon bonds of contractors with municipal corporations, as surety, are jointly and severally held and firmly bound to the CITY OF TACOMA in the penal sum of $_____ , for the payment of

which sum on demand we bind ourselves and our successors, heirs, administrators or personal representatives, as the case may be.

This obligation is entered into in pursuance of the statutes of the State of Washington, the Ordinances of the City of Tacoma.

Dated at Tacoma, Washington, this _____ day of _____, 20_____.

Nevertheless, the conditions of the above obligation are such that:

WHEREAS, under and pursuant to the City Charter and general ordinances of the City of Tacoma, the said City has or is about to enter with the above bounden principal, a certain contract, providing for

Specification No.

Specification Title:

Contract No.

(which contract is referred to herein and is made a part hereof as though attached hereto), and

WHEREAS, the said principal has accepted, or is about to accept, the said contract, and undertake to perform the work therein provided for in the manner and within the time set forth;

NOW, THEREFORE, if the said _____

shall faithfully perform all of the provisions of said contract in the manner and within the time therein set forth, or within such extensions of time as may be granted under said contract, and shall pay all laborers, mechanics, subcontractors and materialmen; the claims of any person or persons arising under the contract to the extent such claims are provided for in RCW 39.08.010; the state with respect to taxes imposed pursuant to Titles 50, 51, and 82 RCW which may be due; and all persons who shall supply said principal or subcontractors with provisions and supplies for the carrying on of said work, and shall indemnify and hold the City of Tacoma harmless from any damage or expense by reason of failure of performance as specified in said contract or from defects appearing or developing in the material or workmanship provided or performed under said contract after its acceptance thereof by the City of Tacoma and all claims filed in compliance with Chapter 39.08, RCW are resolved, then and in that event this obligation shall be void; but otherwise it shall be and remain in full force and effect.

Approved as to form:

_____
City Attorney

Principal:

_____

By: _____

Surety:

_____

By: _____

Agent's Name: _____

Agent's Address: _____

Sample

ACORD ™ CERTIFICATE OF LIABILITY INSURANCE

DATE: 01/15/03

PRODUCER
Brown & Brown of Washington, Inc.
P. O. Box 1718
Tacoma WA 98402
Phone: 253-396-5500 Fax: 253-396-4500

THIS CERTIFICATE IS ISSUED AS A MATTER OF INFORMATION ONLY AND CONFERS NO RIGHTS UPON THE CERTIFICATE HOLDER. THIS CERTIFICATE DOES NOT AMEND, EXTEND OR ALTER THE COVERAGE AFFORDED BY THE POLICIES BELOW.

INSURERS AFFORDING COVERAGE

INSURER A: CNA Insurance Company
INSURER B: Safeco Insurance Company
INSURER C: Fireman's Fund Insurance Company
INSURER D: Washington State Fund (L&I)
INSURER E: F.M. Global Insurance Company

INSURED

General Contractors, Inc.
Attn: John Boss
123 Main Street
Tacoma WA 98401

COVERAGES

THE POLICIES OF INSURANCE LISTED BELOW HAVE BEEN ISSUED TO THE INSURED NAMED ABOVE FOR THE POLICY PERIOD INDICATED. NOTWITHSTANDING ANY REQUIREMENT, TERM OR CONDITION OF ANY CONTRACT OR OTHER DOCUMENT WITH RESPECT TO WHICH THIS CERTIFICATE MAY BE ISSUED OR MAY PERTAIN, THE INSURANCE AFFORDED BY THE POLICIES DESCRIBED HEREIN IS SUBJECT TO ALL THE TERMS, EXCLUSIONS AND CONDITIONS OF SUCH POLICIES. AGGREGATE LIMITS SHOWN MAY HAVE BEEN REDUCED BY PAID CLAIMS.

INSR LTR	TYPE OF INSURANCE	POLICY NUMBER	POLICY EFFECTIVE DATE (MM/DD/YY)	POLICY EXPIRATION DATE (MM/DD/YY)	LIMITS	
A	GENERAL LIABILITY ☒ COMMERCIAL GENERAL LIABILITY ☐ CLAIMS MADE ☒ OCCUR ☐ _____ ☐ _____ GEN'L AGGREGATE LIMIT APPLIES PER: ☐ POLICY ☒ PROJECT ☐ LOC	GL12345678	01/01/03	01/01/04	EACH OCCURRENCE FIRE DAMAGE (Any one fire) MED EXP (Any one person) PERSONAL & ADV INJURY GENERAL AGGREGATE PRODUCTS – COMP/OP AGG	$1,000,000 $100,000 $5,000 $1,000,000 $2,000,000 $2,000,000
B	AUTOMOBILE LIABILITY ☒ ANY AUTO ☐ ALL OWNED AUTOS ☐ SCHEDULED AUTOS ☐ HIRED AUTOS ☐ NON – OWNED AUTOS ☐ _____ ☐ _____	BA554430	01/01/03	01/01/04	COMBINED SINGLE LIMIT (Ea accident) BODILY/INJURY (Per person) BODILY/INJURY (Per accident) PROPERTY DAMAGE (Per accident)	$1,000,000 $ $ $
	GARAGE LIABILITY ☐ ANY AUTO ☐ _____				AUTO ONLY – (Ea Accident) OTHER THAN AUTO ONLY: EA ACC AGG	$ $ $
C	EXCESS LIABILITY ☒ OCCUR ☐ CLAIMS MADE ☐ DEDUCTIBLE ☐ RETENTION	UL987XS	01/01/03	01/01/04	EACH OCCURRENCE AGGREGATE	$5,000,000 $5,000,000 $ $ $
D	WORKER'S COMPENSATION AND EMPLOYER'S LIABILITY	278000652	12/01/03	12/01/04	☒ WC STAT – UTORY LIMITS ☐ OTHER E.L. EACH ACCIDENT	 $1,000,000
A	STOP GAP LIABILITY	GL12345678	01/01/03	01/01/04	E.L. DISEASE – EA EMPLOYEE E.L. DISEASE – POLICY LIMIT	$1,000,000 $1,000,000
E	OTHER BUILDERS' RISK	COC78765	04/01/03	04/01/04	$3,750,000 LIMIT, $10,000 DED, SPECIAL FORM, INCL QUAKE & FLOOD	

DESCRIPTION OF OPERATIONS/LOCATIONS/VEHICLES/EXCLUSIONS ADDED BY ENDORSEMENT/SPECIAL PROVISIONS

City of Tacoma is added as Additional Insured as respects any and all work performed with the City (or as respects project _____). This insurance is primary over any insurance or self-insurance the City may have for any and all work performed with the City (or as respects project _____).

CERTIFICATE HOLDER | Y | ADDITIONAL INSURED; INSURER LETTER A

CITY OF TACOMA
PO BOX 11007
TACOMA WA 98411-0007

CANCELLATION

SHOULD ANY OF THE ABOVE DESCRIBED POLICIES BE CANCELLED BEFORE THE EXPIRATION DATE THEREOF, THE ISSUING INSURER WILL ~~ENDEAVOR TO~~ MAIL 30 DAYS WRITTEN NOTICE TO THE CERTIFICATE HOLDER NAMED TO THE LEFT, ~~BUT FAILURE TO DO SO SHALL IMPOSE NO OBLIGATION LIABILITY OF ANY KIND UPON THE INSURER, ITS AGENTS OR REPRESENTATIVES.~~

AUTHORIZED REPRESENTATIVE
John Q. Agent *John Q. Agent*

SAMPLE

City of Tacoma - Finance Department

RETURN CERTIFICATE TO:
Purchasing Division
P.O. Box 11007
Tacoma, WA 98411-0007
253-502-8468 / FAX 253-502-8372

INSURANCE CERTIFICATE REQUIREMENTS

Please furnish the Purchasing Division with a Certificate of Insurance with the following liability limits based on the contract amount:

CONTRACT AMOUNT	LIABILITY LIMITS
$ 25,000 and Under	$ 500,000 Combined Single Limit
$500,000 and Under	$1,000,000 Per Occurrence / $2,000,000 Aggregate
Over $500,000	$5,000,000 Total Coverage

A. Umbrella excess liability may be used to reach the limits stated above. Coverage must include:
   1. Comprehensive General Liability
   2. Automobile Liability - Hired and Non-Owned
   3. Contractual Coverage
   4. Broad Form Property Damage
   5. Underground Explosion and Collapse Hazard (if necessary by the nature of the work)
   6. Any additional coverage specifically required by the City's specification

B. The following general requirements apply:
   1. Insurance carrier must be authorized to do business in the State of Washington.
   2. Coverage must include personal injury, protective and employer liability.
   3. Contractor must provide with the certificate (a) evidence of the amount of any deductible or self-insured retention under the policy, and (b) policy endorsement(s) that verify compliance with the additional insured and the primary/non-contributory requirements specified in Section C. 1 and C. 2. below.
   4. It is the contractor's responsibility to keep an up-to-date Certificate of Insurance on file with the City throughout the contract.
   5. Contractor's insurance must be primary and non-contributory over any insurance the City may maintain, that is, any such City insurance shall be excess to limits stated in the certificate.

C. The following statements are required on the Certificate of Insurance:
   1. "*The City of Tacoma is named as an additional insured*" ("as respects a specific contract" or "for any and all work performed with the City" may be included in this statement).
   2. "*This insurance is primary and non-contributory over any insurance or self-insurance the City may have*" ("as respects a specific contract" or "for any and all work performed with the City" may be included in this statement).
   3. "*Should any of the above described policies be canceled before the expiration date thereof, the issuing company will mail **30** days written notice to the Certificate Holder named*." Language such as, "endeavor to" mail and "but failure to mail such notice shall impose no obligation or liability of any kind upon the company, its agents or representative" is not acceptable and must be crossed out. **See example below.**

DESCRIPTION OF OPERATIONS/LOCATIONS/VEHICLES/EXCLUSIONS ADDED BY ENDORSEMENT/SPECIAL PROVISIONS
The below listed certificated holder is added as an additional insured as respects any and all work performed with the City (or as respects project _____). This insurance is primary over any insurance or self-insurance the City may have for any and all work performed with the City (or as respects project _____).

CERTIFICATE HOLDER ADDITIONAL INSURED; INSURER LETTER:____	**CANCELLATION**
CITY OF TACOMA PO BOX 11007 TACOMA WA 98411-0007	"Should any of the above described policies be cancelled before the expiration date thereof, the issuing company will ~~endeavor to~~ mail 30 days written notice to the certificate holder named to the left, ~~but failure to do so shall impose no obligation or liability of any kind upon the company, it's agents or representatives.~~"

Pursuant to RCW 60.28, a sum of five percent of the monies earned by the Contractor will be retained from progress estimates. Such retainage shall be used as a trust fund for the protection and payment (1) to the state with respect to taxes imposed pursuant to Title 82, RCW, and (2) the claims of any person arising under the contract.

Release of the retainage will be made 60 days following the completion date (pursuant to RCW 39.12, and RCW 60.28) provided the following conditions are met:

1. On contracts totaling more than $20,000, a release has been obtained from the Washington State Department of Revenue.

2. Affidavits of Wages Paid for the Contractor and all Subcontractors are on file with the contracting agency (RCW 39.12.040).

3. A release has been obtained from the Washington State Department of Labor and Industries (per Section 1-07.10) and the Washington State Employment Security Department.

4. All claims, as provided by law, filed against the retainage have been resolved. In the event claims are filed and provided the conditions or 1, 2, and 3 are met, the contractor will be paid such retained percentage less an amount sufficient to pay any such claims together with a sum determined by the contracting agency sufficient to pay the cost of foreclosing on claims and to cover attorney's fees.

GENERAL RELEASE TO THE CITY OF TACOMA

The undersigned, named as the contractor for _____
Project / Spec. #
between _____ and the City of Tacoma,
(Themselves or Itself)
dated _____, 20___, hereby releases the City of Tacoma, its departmental officers and agents from any and all claim or claims whatsoever in any manner whatsoever at any time whatsoever arising out of and/or in connection with and/or relating to said contract, excepting only the equity of the undersigned in the amount now retained by the City of Tacoma under said contract, to-wit the sum of $_____.

Signed at Tacoma, Washington this _____ day of _____, 20___.

_____
Contractor

By _____

Title _____

PART II

STATE AMENDMENTS
TO THE
STANDARD SPECIFICATIONS

INTRO.AP1

INTRODUCTION

The following Amendments and Special Provisions shall be used in conjunction with the 2014 Standard Specifications for Road, Bridge, and Municipal Construction.

AMENDMENTS TO THE STANDARD SPECIFICATIONS

The following Amendments to the Standard Specifications are made a part of this contract and supersede any conflicting provisions of the Standard Specifications. For informational purposes, the date following each Amendment title indicates the implementation date of the Amendment or the latest date of revision.

Each Amendment contains all current revisions to the applicable section of the Standard Specifications and may include references which do not apply to this particular project.

1-01.AP1

Section 1-01, Definitions and Terms
August 4, 2014

1-01.3 Definitions

The definition for "**Engineer**" is revised to read:

> The Contracting Agency's representative who directly supervises the engineering and administration of a construction Contract.

The definition for "**Inspector**" is revised to read:

> The Engineer's representative who inspects Contract performance in detail.

The definition for "**Project Engineer**" is revised to read:

> Same as Engineer.

The definition for "**Working Drawings**" is revised to read:

> Drawings, plans, diagrams, or any other supplementary data or calculations, including a schedule of submittal dates for Working Drawings where specified, which the Contractor must submit to the Engineer.

1-02.AP1

Section 1-02, Bid Procedures and Conditions
April 7, 2014

1-02.8(1) Noncollusion Declaration

The third paragraph is revised to read:

Therefore, by including the Non-collusion Declaration as part of the signed bid Proposal, the Bidder is deemed to have certified and agreed to the requirements of the Declaration.

1-03.AP1

Section 1-03, Award and Execution of Contract
March 3, 2014

1-03.4 Contract Bond

The last word of item 3 is deleted.

Item 4 is renumbered to 5.

The following is inserted after item 3 (after the preceding Amendments are applied):

4. Be conditioned upon the payment of taxes, increases, and penalties incurred on the project under titles 50, 51, and 82 RCW; and

1-04.AP1

Section 1-04, Scope of the Work
August 4, 2014

1-04.4 Changes

In the third paragraph, item number 1 and 2 are revised to read:

A. When the character of the Work as altered differs materially in kind or nature from that involved or included in the original proposed construction; or

B. When an item of Work, as defined elsewhere in the Contract, is increased in excess of 125 percent or decreased below 75 percent of the original Contract quantity. For the purpose of this Section, an item of Work will be defined as any item that qualifies for adjustment under the provisions of Section 1-04.6.

The last two paragraphs are deleted.

This section is supplemented with the following new subsections:

1-04.4(2) Value Engineering Change Proposal (VECP)

1-04.4(2)A General

A VECP is a Contractor proposed change to the Contract Provisions which will accomplish the projects functional requirements in a manner that is equal to or better than the requirements in the Contract. The VECP may be: (1) at a less cost or time, or (2) either no cost savings or a minor increase in cost with a reduction in Contract time. The net savings or added costs to the Contract Work are shared by the Contractor and Contracting Agency.

The Contractor may submit a VECP for changing the Plans, Specifications, or other requirements of the Contract. The Engineer's decision to accept or reject all or part

of the proposal is final and not subject to arbitration under the arbitration clause or otherwise subject to litigation.

The VECP shall meet all of the following:

1. Not adversely affect the long term life cycle costs.

2. Not adversely impact the ability to perform maintenance.

3. Provide the required safety and appearance.

4. Provide substitution for deleted or reduced Disadvantaged Business Enterprise Condition of Award Work, Apprentice Utilization and Training.

VECPs that provide a time reduction shall meet the following requirements:

1. Time saving is a direct result of the VECP.

2. Liquidated damages penalties are not used to calculate savings.

3. Administrative/overhead cost savings experienced by either the Contractor or Contracting Agency as a result of time reduction accrue to each party and are not used to calculate savings.

1-04.4(2)B VECP Savings

1-04.4(2)B1 Proposal Savings

The incentive payment to the Contractor shall be one-half of the net savings of the proposal calculated as follows:

1. (gross cost of deleted work) – (gross cost of added work) = (gross savings)

2. (gross savings) – (Contractor's engineering costs) – (Contracting Agency's costs) = (net savings)

3. (net savings) / 2 = (incentive pay)

The Contracting Agency's costs shall be the actual consultant costs billed to the Contracting Agency and in-house costs. Costs for personnel assigned to the Engineer's office shall not be included.

1-04.4(2)B2 Added Costs to Achieve Time Savings

The cost to achieve the time savings shall be calculated as follows:

1. (cost of added work) + (Contractor's engineering costs - Contracting Agency's engineering costs) = (cost to achieve time savings)

2. (cost to achieve time savings) / 2 = (Contracting Agency's share of added cost)

If the timesaving proposal also involves deleting work and, as a result, creates a savings for the Contracting Agency, then the Contractor shall also receive one-half of the savings realized through the deletion.

1-04.4(2)C VECP Approval

1-04.4(2)C1 Concept Approval

The Contractor shall submit a written proposal to the Engineer for consideration. The proposal shall contain the following information:

1. An explanation outlining the benefit provided by the change(s).

2. A narrative description of the proposed change(s). If applicable, the discussion shall include a demonstration of functional equivalency or a description of how the proposal meets the original contract scope of work.

3. A cost discussion estimating any net savings. Savings estimates will generally follow the outline below under the section, “Proposal Savings”.

4. A statement providing the Contracting Agency with the right to use all or any part of the proposal on future projects without future obligation or compensation.

5. A statement acknowledging and agreeing that the Engineer’s decision to accept or reject all or part of the proposal is final and not subject to arbitration under the arbitration clause or otherwise be subject to claims or disputes.

6. A statement giving the dates the Engineer must make a decision to accept or reject the conceptual proposal, the date that approval to proceed must be received, and the date the work must begin in order to not delay the contract. If the Contracting Agency does not approve the VECP by the date specified by the Contractor in their proposal the VECP will be deemed rejected.

7. The submittal will include an analysis on other Work that may have costs that changed as a result of the VECP. Traffic control and erosion control shall both be included in addition to any other impacted Work.

After review of the proposal, the Engineer will respond in writing with acceptance or rejection of the concept. This acceptance shall not be construed as authority to proceed with any change contract work. Concept approval allows the Contractor to proceed with the Work needed to develop final plans and other information to receive formal approval and to support preparation of a change order.

1-04.4(2)C2 Formal Approval

The Contractor’s submittal to the Engineer for formal approval shall include the following:

1. Deleted Work – Include the calculated quantities of unit price Work to be deleted. Include the proposed partial prices for portions of lump sum Work deleted. For deletion of force account items include the time and material estimates.

2. Added Work – Include the calculated quantities of unit price Work to be added, either by original unit Contract prices or by new, negotiated unit prices. For new items of Work include the quantities and proposed prices.

3. Contractor's Engineering Costs – Submit the labor costs for the engineering to develop the proposal; costs for Contractor employees utilized in contract operations on a regular basis shall not be included.

4. Schedule Analysis – If the VECP is related to time savings, the Contractor shall submit a partial progress schedule showing the changed Work. The submittal shall also include a discussion comparing the partial progress schedule with the approved progress schedule for the project.

5. Working Drawings – Type 3 Working Drawings shall be submitted; those drawings which require engineering shall be a Type 3E.

Formal approval of the proposal will be documented by issuance of a change order. The VECP change order will contain the following statements which the Contractor agrees to by signing the change order:

1. The Contractor accepts design risk of all features, both temporary and permanent, of the changed Work.

2. The Contractor accepts risk of constructability of the changed Work.

3. The Contractor provides the Contracting Agency with the right to use all or any part of the proposal on future projects without further obligation or compensation.

VECP change orders will contain separate pay items for the items that are applicable to the Proposal. These are as follows:

1. Deleted Work.

2. Added Work.

3. The Contractor's engineering costs, reimbursed at 100 percent of the Contractor's cost.

4. Incentive payment to the Contractor.

When added Work costs exceed Deleted Work costs, but time savings make a viable proposal, then items 3 and 4 above are replaced with the following:

3. The Contracting Agency's share of added cost to achieve time savings.

4. The Contractor's share of savings from deleted Work.

1-04.4(2)C3 Authority to Proceed with Changed Work
The authority for the Contractor to proceed with the VECP Work will be provided by one of the following options:

1. Execution of the VECP change order, or

2. At the Contractor's request the Contracting Agency may provide approval by letter from the Engineer for the Work to proceed prior to execution of a change order. All of the risk for proceeding with the VECP shall be the responsibility of the Contractor. Additionally, the following criteria are required to have been met:

   a) Concept approval has been granted by the Contracting Agency.

   b) All design reviews and approvals have been completed, including plans and specifications.

   c) The Contractor has guaranteed, in writing, the minimum savings to the Contracting Agency.

1-05.AP1

Section 1-05, Control of Work
August 4, 2014

1-05.1 Authority of the Engineer
In this section, "Project Engineer" is revised to read "Engineer".

The second paragraph (up until the colon) is revised to read:

The Engineer's decisions will be final on all questions including the following:

The first sentence in the third paragraph is revised to read:

The Engineer represents the Contracting Agency with full authority to enforce Contract requirements.

1-05.2 Authority of Assistants and Inspectors
The first paragraph is revised to read:

The Engineer may appoint assistants and Inspectors to assist in determining that the Work and materials meet the Contract requirements. Assistants and Inspectors have the authority to reject defective material and suspend Work that is being done improperly, subject to the final decisions of the Engineer.

In the third paragraph, "Project Engineer" is revised to read "Engineer".

1-05.3 Plans and Working Drawings

This section's title is revised to read:

Working Drawings

This section is revised to read:

The Contract may require the Contractor to submit Working Drawings for the performance of the Work. Working Drawings shall be submitted by the Contractor electronically to the Engineer in PDF format; drawing details shall be prepared in accordance with conventional detailing practices. If the PDF format is found to be unacceptable, at the request of the Engineer, the Contractor shall provide paper copies of the Working Drawings with drawings on 11 by 17 inch sheets and calculations/text on 8½ by 11 inch sheets.

Working Drawings will be classified under the following categories:

1. **Type 1** – Submitted for Contracting Agency information. Submittal must be received by the Contracting Agency a minimum of 7 calendar days before work represented by the submittal begins.

2. **Type 2** – Submitted for Contracting Agency review and comment. Unless otherwise stated in the Contract, the Engineer will require up to 20 calendar days from the date the Working Drawing is received until it is returned to the Contractor. The Contractor shall not proceed with the Work represented by the Working Drawing until comments from the Engineer have been addressed.

3. **Type 2E** – Same as a Type 2 Working Drawing with Engineering as described below.

4. **Type 3** – Submitted for Contracting Agency review and approval. Unless otherwise stated in the Contract, the Engineer will require up to 30 calendar days from the date the Working Drawing is received until it is returned to the Contractor. The Contractor shall obtain the Engineer's written approval before proceeding with the Work represented by the Working Drawing.

5. **Type 3E** – Same as a Type 3 Working Drawing with Engineering as described below.

All Working Drawings shall be considered Type 3 Working Drawings except as specifically noted otherwise in the Contract. Unless designated otherwise by the Contractor, submittals of Working Drawings will be reviewed in the order they are received by the Engineer. In the event that several Working Drawings are received simultaneously, the Contractor shall specify the sequence in which they are to be reviewed. If the Contractor does not submit a review sequence for simultaneous Working Drawing submittals, the review sequence will be at the Engineer's discretion.

Working Drawings requiring Engineering, Type 2E and 3E, shall be prepared by (or under the direction of) a Professional Engineer, licensed under Title 18 RCW, State of Washington, and in accordance with WAC 196-23-020. Design calculations shall carry the Professional Engineer's signature and seal, date of signature, and registration

number on the cover page. The cover page shall also include the Contract number, Contract title and sequential index to calculation page numbers.

If more than the specified number of days is required for the Engineer's review of any individual Working Drawing or resubmittal, an extension of time will be considered in accordance with Section 1-08.8.

Review or approval of Working Drawings shall neither confer upon the Contracting Agency nor relieve the Contractor of any responsibility for the accuracy of the drawings or their conformity with the Contract. The Contractor shall bear all risk and all costs of any Work delays caused by rejection or nonapproval of Working Drawings.

Unit Bid prices shall cover all costs of Working Drawings.

1-07.AP1

Section 1-07, Legal Relations and Responsibilities to the Public
January 6, 2014

1-07.2 State Taxes

This section is revised to read:

The Washington State Department of Revenue has issued special rules on the state sales tax. Sections 1-07.2(1) through 1-07.2(3) are meant to clarify those rules. The Contracting Agency will not adjust its payment if the Contractor bases a Bid on a misunderstood tax liability.

The Contracting Agency may deduct from its payments to the Contractor, retainage or lien the bond, in the amount the Contractor owes the State Department of Revenue, whether the amount owed relates to the Contract in question or not. Any amount so deducted will be paid into the proper State fund on the contractor's behalf. For additional information on tax rates and application refer to applicable RCWs, WACs or the Department of Revenue's website.

1-07.2(1) State Sales Tax: Work Performed on City, County, or Federally-Owned Land

This section including title is revised to read:

1-07.2(1) State Sales Tax: WAC 458-20-171 – Use Tax

For Work designated as Rule 171, **Use Tax,** the Contractor shall include for compensation the amount of any taxes paid in the various unit Bid prices or other Contract amounts. Typically, these taxes are collected on materials incorporated into the project and items such as the purchase or rental of; tools, machinery, equipment, or consumable supplies not integrated into the project.

The Summary of Quantities in the Contract Plans identifies those parts of the project that are subject to **Use Tax** under Section 1-07.2(1).

1-07.2(2) State Sales Tax: Work on State-Owned or Private Land

This section including title is revised to read:

1-07.2(2) State Sales Tax: WAC 458-20-170 – Retail Sales Tax

For Work designated as Rule 170, **Retail Sales Tax,** the Contractor shall collect from the Contracting Agency, **Retail Sales Tax** on the full Contract price. The Contracting Agency will automatically add this **Retail Sales Tax** to each payment to the Contractor and for this reason; the Contractor shall not include the **Retail Sales Tax** in the unit Bid prices or in any other Contract amount. However, the Contracting Agency will not provide additional compensation to the Prime Contractor or Subcontractor for **Retail Sales Taxes** paid by the Contractor in addition to the **Retail Sales Tax** on the total contract amount. Typically, these taxes are collected on items such as the purchase or rental of; tools, machinery, equipment, or consumable supplies not integrated into the project. Such sales taxes shall be included in the unit Bid prices or in any other Contract amounts.

The Summary of Quantities in the Contract Plans identifies those parts of the project that are subject to **Retail Sales Tax** under Section 1-07.2(2).

1-07.2(3) Services

This section is revised to read:

Any contract wholly for professional or other applicable services is generally not subject to **Retail Sales Tax** and therefore the Contractor shall not collect **Retail Sales Tax** from the Contracting Agency on those Contracts. Any incidental taxes paid as part of providing the services shall be included in the payments under the contract.

1-08.AP1

Section 1-08, Prosecution and Progress
May 5, 2014

1-08.1 Subcontracting

The eighth paragraph is revised to read:

On all projects, the Contractor shall certify to the actual amounts paid to Disadvantaged, Minority, Women's, or Small Business Enterprise firms that were used as Subcontractors, lower tier subcontractors, manufacturers, regular dealers, or service providers on the Contract. This Certification shall be submitted to the Project Engineer on a monthly basis each month between Execution of the Contract and Physical Completion of the contract using the application available at: https://remoteapps.wsdot.wa.gov/mapsdata/tools/dbeparticipation. The monthly report is due 20 calendar days following the end of the month. A monthly report shall be submitted for every month between Execution of the Contract and Physical Completion regardless of whether payments were made or work occurred.

The ninth paragraph is deleted.

1-10.AP1

Section 1-10, Temporary Traffic Control
August 4, 2014

1-10.1(1) Materials

The following material reference is deleted from this section:

Barrier Drums 9-35.8

1-10.1(2) Description

The first paragraph is revised to read:

The Contractor shall provide flaggers, and all other personnel required for labor for traffic control activities and not otherwise specified as being furnished by the Contracting Agency.

1-10.2(1) General

In the third paragraph, the first two sentences are revised to read:

The primary and alternate TCS shall be certified by one of the organizations listed in the Special Provisions. Possession of a current Washington State TCS card and flagging card by the primary and alternate TCS is mandatory.

1-10.2(1)B Traffic Control Supervisor

The first paragraph is revised to read:

A Traffic Control Supervisor (TCS) shall be present on the project whenever flagging or other traffic control labor is being utilized or less frequently, as authorized by the Engineer.

The last paragraph is revised to read:

The TCS may perform the Work described in Section 1-10.3(1)A Flaggers or in Section 1-10.3(1)B Other Traffic Control Labor and be compensated under those Bid items, provided that the duties of the TCS are accomplished.

1-10.2(2) Traffic Control Plans

The first paragraph is revised to read:

The traffic control plan or plans appearing in the Contract documents show a method of handling vehicle, bicycle, and pedestrian traffic. All construction signs, flaggers, and other traffic control devices are shown on the traffic control plan(s) except for emergency situations. If the Contractor proposes adding the use of flaggers to a plan, this will constitute a modification requiring approval by the Engineer. The modified plans shall show locations for all the required advance warning signs and a safe, protected location for the flagging station. If flagging is to be performed during hours of darkness, the plan shall include appropriate illumination for the flagging station.

In the second paragraph, the second sentence is revised to read:

Any Contractor-proposed modification, supplement or replacement shall show the necessary construction signs, flaggers, and other traffic control devices required to support the Work.

1-10.2(3) Conformance to Established Standards

In the second paragraph, the second sentence is revised to read:

The National Cooperative Highway Research Project (NCHRP) Report 350 and the AASHTO Manual for Assessing Safety Hardware (MASH) have established requirements for crash testing.

In the third paragraph, “NCHRP 350” is revised to read “NCHRP 350 or MASH”.

In the fourth paragraph, “NCHRP 350” is revised to read “NCHRP 350 or MASH”.

In the fifth paragraph, “NCHRP 350” is revised to read “NCHRP 350 or MASH”.

1-10.3(1) Traffic Control Labor

The first paragraph is revised to read:

The Contractor shall furnish all personnel for flagging, for the execution of all procedures related to temporary traffic control and for the setup, maintenance and removal of all temporary traffic control devices and construction signs necessary to control vehicular, bicycle, and pedestrian traffic during construction operations.

1-10.3(1)A Flaggers and Spotters

This section’s title is revised to read:

Flaggers

The first paragraph is revised to read:

Flaggers shall be posted where shown on approved Traffic Control Plans or where directed by the Engineer. All flaggers shall possess a current flagging card issued by the State of Washington, Oregon, Montana, or Idaho. The flagging card shall be immediately available and shown to the Contracting Agency upon request.

The last paragraph is deleted.

1-10.3(1)B Other Traffic Control Labor

This section is revised to read:

In addition to flagging duties, the Contractor shall provide personnel for all other traffic control procedures required by the construction operations and for the labor to install, maintain and remove any traffic control devices shown on Traffic Control Plans.

1-10.3(3)B Sequential Arrow Signs

This section is supplemented with the following:

A sequential arrow sign is required for all lane closure tapers on a multilane facility. A separate sequential arrow sign shall be used for each closed lane. The arrow sign shall not be used to laterally shift traffic. When used in the caution mode, the four corner mode shall be used.

1-10.3(3)C Portable Changeable Message Signs

This section is revised to read:

Where shown on an approved traffic control plan or where ordered by the Engineer, the Contractor shall provide, operate, and maintain portable changeable message signs

(PCMS). A PCMS shall be placed behind a barrier or guardrail whenever possible, but shall at a minimum provide 4 ft. of lateral clearance to edge of travelled lane and be delineated by channelization devices. The Contractor shall remove the PCMS from the clear zone when not in use unless protected by barrier or guardrail.

1-10.3(3)F Barrier Drums

This section including title is deleted in its entirety and replaced with the following:

1-10.3(3)F Vacant

1-10.3(3)K Portable Temporary Traffic Control Signal

The fifth paragraph is revised to read:

The Project Engineer or designee will inspect the signal system at initial installation/operation and approve the signal timing. Final approval will be based on the results of the operational inspection.

1-10.4(2) Item Bids With Lump Sum for Incidentals

In the second paragraph, the first and second sentences are revised to read:

"Flaggers" will be measured by the hour. Hours will be measured for each flagging station, shown on an approved Traffic Control Plan, when that station is staffed in accordance with Section 1-10.3(1)A.

The first sentence of the last bulleted item in this section is revised to read:

Installing and removing Barricades, Traffic Safety Drums, Cones, Tubular Markers and Warning Lights and Flashers to carry out approved Traffic Control Plan(s).

1-10.5(2) Item Bids With Lump Sum for Incidentals

This section is deleted and replaced with the following:

"Traffic Control Supervisor", lump sum.

The lump sum Contract payment shall be full compensation for all costs incurred by the Contractor in performing the Work defined in Section 1-10.2(1)B.

"Pedestrian Traffic Control", lump sum.

The lump sum Contract payment shall be full compensation for all costs incurred by the Contractor in performing the Work for pedestrian traffic control defined in Section 1-10.

"Flaggers", per hour.

The unit Contract price, when applied to the number of units measured for this item in accordance with Section 1-10.4(2), shall be full compensation for all costs incurred by the Contractor in performing the Work defined in Section 1-10.3(1)A.

"Other Traffic Control Labor", per hour.

The unit Contract price, when applied to the number of units measured for this item in accordance with Section 1-10.4(2), shall be full compensation for all labor costs incurred by the Contractor in performing the Work specified for this item in Section 1-10.4(2).

"Construction Signs Class A", per square foot.

The unit Contract price, when applied to the number of units measured for this item in accordance with Section 1-10.4(2), shall be full compensation for all costs incurred by the Contractor in performing the Work described in Section 1-10.3(3)A. In the event that "Do Not Pass" and "Pass With Care" signs must be left in place, a change order, as described in Section 1-04.4, will be required. When the Bid Proposal contains the item "Sign Covering", then covering those signs indicated in the Contract will be measured and paid according to Section 8-21.

"Sequential Arrow Sign", per hour.

The unit Contract price, when applied to the number of units measured for this item in accordance with Section 1-10.4(2), shall be full compensation for all costs incurred by the Contractor in performing the Work described in Section 1-10.3(3)B.

"Portable Changeable Message Sign", per hour.

The unit Contract price, when applied to the number of units measured for this item in accordance with Section 1-10.4(2), shall be full compensation for all costs incurred by the Contractor in performing the Work for procuring all portable changeable message signs required for the project and for transporting these signs to and from the project.

"Transportable Attenuator", per each.

The unit Contract price, when applied to the number of units measured for this item in accordance with Section 1-10.4(2), shall be full compensation for all costs incurred by the Contractor in performing the Work described in Section 1-10.3(3)J except for costs compensated separately under the items "Operation of Transportable Attenuator" and "Repair Transportable Attenuator".

"Operation of Transportable Attenuator", per hour.

The unit Contract price, when applied to the number of units measured for this item in accordance with Section 1-10.4(2), shall be full compensation for all costs incurred by the Contractor in performing the Work for operating transportable attenuators on the project.

"Repair Transportable Attenuator", by force account.

All costs of repairing or replacing transportable attenuators that are damaged by the motoring public while in use as shown on an approved Traffic Control Plan will be paid for by force account as specified in Section 1-09.6. To provide a common Proposal for all Bidders, the Contracting Agency has estimated the amount of force account for "Repair Transportable Attenuator" and has entered the amount in the Proposal to become a part of the total Bid by the Contractor. Transportable attenuators damaged due to the Contractor's operation or damaged in any manner when not in use shall be repaired or replaced by the Contractor at no expense to the Contracting Agency.

"Other Temporary Traffic Control", lump sum.

The lump sum Contract payment shall be full compensation for all costs incurred by the Contractor in performing the Work defined in Section 1-10, and which costs are not compensated by one of the above-listed items.

"Portable Temporary Traffic Control Signal", lump sum.

The lump sum Contract payment shall be full compensation for all costs incurred by the Contractor in performing the Work as described in Section 1-10.3(3)K, including all costs for traffic control during manual control, adjustment, malfunction, or failure of the portable traffic control signals and during replacement of failed or malfunctioning signals.

2-01.AP2

Section 2-01, Clearing, Grubbing, and Roadside Cleanup
August 4, 2014

2-01.3(1) Clearing

In the second paragraph, item number 3 (up until the colon) is revised to read:

3. Follow these requirements for all stumps that will be buried deeper than 5 feet from the top, side, or end surface of the embankment or any structure and are in a location that will not be terraced as described in Section 2-03.3(14):

2-03.AP2

Section 2-03, Roadway Excavation and Embankment
August 4, 2014

2-03.3(14) Embankment Construction

The third paragraph is revised to read:

Hillside Terraces – The Contractor shall terrace the original ground or embankment when the slope of the surface is 2H:1V or steeper unless otherwise directed by the Engineer. The face of each terrace shall be a minimum of 1 foot and a maximum of 5 feet in height and shall be vertical or near vertical as required to remain stable during material placement and compaction. The bench of the terrace shall slope outward to drain and shall not be inclined steeper than 0.05 foot per foot. Terraces damaged during work shall be reestablished. The Engineer may order the Contractor to place gravel backfill, pipe drains or both to drain any seepage.

2-03.3(14)L Embankment Widening for Guardrail

The first sentence is revised to read:

Embankments widened for the installation of beam guardrail shall be terraced in accordance with the requirements for hillside terraces in Section 2-03.3(14).

The second sentence is deleted.

3-04.AP3

Section 3-04, Acceptance of Aggregate
August 4, 2014

3-04.5 Payment
In Table 2, the row containing the item "HMA Aggregate" is revised to read:

9-03.8(2)	HMA Aggregate						15	15	Uncompacted Void Content 15

5-01.AP5

Section 5-01, Cement Concrete Pavement Rehabilitation
August 4, 2014

5-01.2 Materials
The referenced section for the following item is revised to read:

Dowel Bars 9-07.5

5-01.3(4) Replace Portland Cement Concrete Panel
In the third paragraph, the last sentence is deleted.

The seventeenth paragraph (beginning with "The Contractor shall place a bond-breaking material…") is deleted.

5-02.AP5

Section 5-02, Bituminous Surface Treatment
August 4, 2014

5-02.3(11) Temporary Raised Pavement Markings
This section's title is revised to read:

Temporary Pavement Markings

The word "raised" is deleted from this section.

5-04.AP5

Section 5-04, Hot Mix Asphalt
August 4, 2014

5-04.3(7)A3 Commercial Evaluation
The second sentence in the first paragraph is revised to read:

Mix designs for HMA accepted by commercial evaluation shall be submitted to the Project Engineer on WSDOT Form 350-042.

5-04.3(10)A General

In the first paragraph, “checking” and “cracking” are deleted.

In the third paragraph, the following new sentence is inserted after the second sentence:

> Coverage with a steel wheel roller may precede pneumatic tired rolling.

In the third paragraph, the following new sentence is inserted before the last sentence:

> Regardless of mix temperature, a roller shall not be operated in a mode that results in checking or cracking of the mat.

5-04.3(10)B1 General

In this section, “Project Engineer” is revised to read “Engineer”.

The first paragraph is revised to read:

> HMA mixture accepted by statistical or nonstatistical evaluation that is used in traffic lanes, including lanes for ramps, truck climbing, weaving, and speed change, and having a specified compacted course thickness greater than 0.10-foot, shall be compacted to a specified level of relative density. The specified level of relative density shall be a Composite Pay Factor (CPF) of not less than 0.75 when evaluated in accordance with Section 1-06.2, using a minimum of 91 percent of the maximum density. The percent of maximum density shall be determined by WSDOT FOP for AASHTO T 729 when using the nuclear density gauge and WSDOT SOP 736 when using cores to determine density. The specified level of density attained will be determined by the statistical evaluation of the density of the pavement.

The following four new paragraphs are inserted after the first paragraph:

> Tests for the determination of the pavement density will be taken in accordance the required procedures for measurement by a nuclear density gauge or roadway cores after completion of the finish rolling.
>
> If the Contracting Agency uses a nuclear density gauge to determine density the test procedures FOP for WAQTC TM 8 and WSDOT SOP T 729 will be used on the day the mix is placed.
>
> Roadway cores for density may be obtained by either the Contracting Agency or the Contractor in accordance with WSDOT SOP 734. The core diameter shall be 4-inches unless other approved by the Engineer. Roadway cores will be tested by the Contracting Agency in accordance with WSDOT FOP for AASHTO T 166.
>
> If the Contract includes the Bid item “Roadway Core” the cores shall be obtained by the Contractor in the presence of the Engineer on the same day the mix is placed and at locations designated by the Engineer. If the Contract does not include the Bid item “Roadway Core” the Contracting Agency will obtain the cores.

5-04.3(10)B4 Test Results

The first paragraph is revised to read:

The results of all compaction acceptance testing and the CPF of the lot after three sublots have been tested will be available to the Contractor through WSDOT's website. Determination of the relative density of the HMA with a nuclear density gauge requires a correlation factor and may require resolution after the correlation factor is known. Acceptance of HMA compaction will be based on the statistical evaluation and CPF so determined.

In the second paragraph, the first sentence is revised to read:

For a sublot that has been tested with a nuclear density gauge that did not meet the minimum of 91 percent of the reference maximum density in a compaction lot with a CPF below 1.00 and thus subject to a price reduction or rejection, the Contractor may request that a core be used for determination of the relative density of the sublot.

In the second sentence of the second paragraph, "moisture-density" is revised to read "density".

In the second paragraph, the fourth sentence is deleted.

5-04.4 Measurement

The following new paragraph is inserted after the first paragraph:

Roadway cores will be measured per each for the number of cores taken.

The second to last paragraph is deleted.

5-04.5 Payment

The bid item "Removing Temporary Pavement Marking", per linear foot and paragraph following bid item are deleted.

The following new bid item is inserted before the second to last paragraph:

"Roadway Core", per each.

The Contractor's costs for all other Work associated with the coring (e.g., traffic control) shall be incidental and included within the unit Bid price per each and no additional payments will be made.

5-05.AP5

Section 5-05, Cement Concrete Pavement
August 4, 2014

5-05.3(1) Concrete Mix Design for Paving

The second and third rows of the table in item number 3 are revised to read:

Coarse Aggregate	+ 30 Pounds	- 30 Pounds
Fine Aggregate	+ 30 Pounds	- 30 Pounds

5-05.4 Measurement

The fourth paragraph is supplemented with the following new sentence:

Tie bars with drill holes in cement concrete pavement placed under the Contract will not be measured.

5-05.5 Payment

The paragraph following the Bid item "Tie Bar with Drill Hole", per each is supplemented with the following new sentence:

All costs for tie bars with drill holes in cement concrete pavement placed under the Contract shall be included in the unit Contract price per cubic yard for "Cement Conc. Pavement".

6-02.AP6

Section 6-02, Concrete Structures
August 4, 2014

6-02.3(1) Classification of Structural Concrete

In paragraph two, item number 1 is revised to read:

Mix design and proportioning specified in Sections 6-02.3(2), 6-02.3(2)A and 6-02.3(2)A1.

Item number 3 is renumbered to 4.

After the preceding Amendments are applied, the following new numbered item is inserted after item number 2:

3. Temperature and time for placement requirements specified in Section 6-02.3(4)D.

6-02.3(2) Proportioning Materials

In the third paragraph, the first sentence is revised to read:

The use of fly ash is required for Class 4000P concrete, except that ground granulated blast furnace slag may be substituted for fly ash at a 1:1 ratio.

In the table titled "Cementitious Requirement for Concrete", the row beginning with "4000D" is deleted.

The fourth paragraph is revised to read:

When both ground granulated blast furnace slag and fly ash are included in the concrete mix, the total weight of both these materials is limited to 40 percent by weight of the total cementitious material for concrete class 4000A, and 50 percent by weight of the total cementitious material for all other classes of concrete.

6-02.3(2)A Contractor Mix Design

The first paragraph is revised to read:

The Contractor shall provide a mix design in writing to the Engineer for all classes of concrete specified in the Plans except for lean concrete and commercial concrete. No concrete shall be placed until the Engineer has reviewed the mix design. The required average 28-day compressive strength shall be selected in accordance with ACI 318,

Chapter 5, Section 5.3.2. ACI 211.1 and ACI 318 shall be used to determine proportions. All proposed concrete mixes except Class 4000D shall meet the requirements in Cementitious Requirement for Concrete in Section 6-02.3(2).

In the fourth paragraph, the fourth sentence is deleted.

In the sixth paragraph, the first sentence is deleted.

In the seventh paragraph, the last sentence is deleted.

The eighth paragraph is revised to read:

Air content for concrete Class 4000D shall conform to Section 6-02.3(2)A1. For all other concrete, air content shall be a minimum of 4.5 percent and a maximum of 7.5 percent for all concrete placed above the finished ground line.

The following new sub-section is added:

6-02.3(2)A1 Contractor Mix Design for Concrete Class 4000D

All Class 4000D concrete shall be a project specific performance mix design conforming to the following requirements:

1. Aggregate shall use combined gradation in accordance with Section 9-03.1(5) with a nominal maximum aggregate size of 1-1/2 inches.

2. Permeability shall be less than 2,000 coulombs at 56 days in accordance with AASHTO T 277.

3. Freeze-thaw durability shall be provided by one of the following methods:
   a. The concrete shall maintain an air content between 4.5 and 7.5 percent.
   b. The concrete shall maintain a minimum air content that achieves a durability factor of 90 percent, minimum, after 300 cycles in accordance with AASHTO T 161, Procedure A. This air content shall not be less than 3.0 percent. Test samples shall be obtained from concrete batches of a minimum of 3.0 cubic yards.

4. Scaling shall have a visual rating less than or equal to 2 after 50 cycles in accordance with ASTM C 672.

5. Shrinkage at 28 days shall be less than 320 micro strain in accordance with AASHTO T 160.

6. Modulus of elasticity shall be measured in accordance with ASTM C 469.

7. Density shall be measured in accordance with ASTM C 138.

The Contractor shall submit the mix design in accordance with Section 6-02.3(2)A. The submittal shall include test reports for all tests listed above that follow the reporting requirements of the AASHTO/ASTM procedures. Samples for testing may be obtained from either laboratory or concrete plant batches. If concrete plant batches are used, the minimum batch size shall be 3.0 cubic yards. The Contractor shall submit the mix

design to the Engineer at least 30 calendar days prior to the placement of concrete in the bridge deck.

6-02.3(4)D Temperature and Time For Placement

The first two sentences are revised to read:

Concrete temperatures shall remain between 55ºF and 90ºF while it is being placed, except that Class 4000D concrete temperatures shall remain between 55°F and 75°F during placement. Precast concrete that is heat cured in accordance with Section 6-02.3(25)D shall remain between 50ºF and 90ºF while being placed.

6-02.3(5)A General

The first paragraph is revised to read:

Concrete for the following applications will be accepted based on a Certificate of Compliance to be provided by the supplier as described in Section 6-02.3(5)B:

1. Lean concrete.

2. Commercial concrete.

3. Class 4000P concrete for Roadside Steel Sign Support Foundations.

4. Class 4000P concrete for Type II, III, and CCTV Signal Standard Foundations that are 12'-0" or less in depth.

5. Class 4000P concrete for Type IV and V Strain Pole Foundations that are 12'-0" or less in depth.

6. Class 4000P concrete for Steel Light Standard Foundations Types A & B.

The following new sentence is inserted at the beginning of the second paragraph:

Slip-form barrier concrete will be accepted based on conformance to the requirements for temperature, air content and compressive strength at 28 days for sublots as tested and determined by the Contracting Agency.

6-02.3(5)H Sampling and Testing for Compressive Strength and Initial Curing

The second paragraph is revised to read:

The Contractor shall provide and maintain a sufficient number of cure boxes in accordance with WSDOT FOP for AASHTO T 23 for curing concrete cylinders. The cure boxes shall be readily accessible and no more than 500 feet from the point of acceptance testing, unless otherwise approved by the Engineer. The Contractor shall also provide, maintain and operate all necessary power sources and connections needed to operate the cure boxes. The cure boxes shall be in-place and functioning at the specified temperature for curing cylinders prior to concrete placement. Concrete cylinders shall be cured in the cure boxes in accordance with WSDOT FOP for AASHTO T 23. The cure boxes shall have working locks and the Contractor shall provide the Engineer with one key to each of the locks. Once concrete cylinders are placed in the cure box, the cure box shall not be disturbed until the cylinders have been

removed. The Contractor shall retain the cure box Temperature Measuring Device log and provide it to the Engineer upon request.

The following new paragraph is inserted after the last paragraph:

All cure box costs shall be incidental to the associated item of work.

6-02.3(6)A2 Cold Weather Protection

The first sentence in the first paragraph is revised to read:

This Specification applies when the weather forecast on the day of concrete placement predicts air temperatures below 35°F at any time during the 7 days following placement.

The first sentence of the second paragraph is revised to read:

The temperature of the concrete shall be maintained above 50°F during the entire curing period or 7 days, whichever is greater.

6-02.3(10)D Concrete Placement, Finishing, and Texturing

This section is supplemented with the following new sub-sections:

6-02.3(10)D1 Test Slab Using Bridge Deck Concrete

After the Contractor receives the Engineer's approval for the Class 4000D concrete mix design, and a minimum of seven calendar days prior to the first placement of bridge deck concrete, the Contractor shall construct a test slab using concrete of the approved mix design.

The test slab may be constructed on grade, shall have a minimum thickness of eight-inches, shall have minimum plan dimensions of 10-feet along all four edges, and shall be square or rectangular.

During construction of the test slab, the Contractor shall demonstrate concrete sampling and testing, use of the concrete temperature monitoring system, the concrete fogging system, concrete placement system, and the concrete finishing operation. The Contractor shall conduct the demonstration using the same type of equipment to be used for the production bridge decks, except that the Contractor may elect to finish the test slab with a hand-operated strike-board.

After the construction of the test slab and the demonstration of bridge deck construction operations is complete, the Contractor shall remove and dispose of the test slab in accordance with Sections 2-02.3 and 2-03.3(7)C.

6-02.3(10)D2 Preparation for Concrete Placement

Before placing bridge approach slab concrete, the subgrade shall be constructed in accordance with Sections 2-06 and 5-05.3(6).

Before any concrete is placed, the finishing machine shall be operated over the entire length of the deck/slab to check screed deflection. Concrete placement may begin only if the Engineer approves after this test.

Immediately before placing concrete, the Contractor shall check (and adjust if necessary) all falsework and wedges to minimize settlement and deflection from the

added mass of the concrete deck/slab. The Contractor shall also install devices, such as telltales, by which the Engineer can readily measure settlement and deflection.

6-02.3(10)D3 Concrete Placement

The placement operation shall cover the full width of the bridge deck or the full width between construction joints. The Contractor shall locate any construction joint over a beam or web that can support the deck/slab on either side of the joint. The joint shall not occur over a pier unless the Plans permit. Each joint shall be formed vertically and in true alignment. The Contractor shall not release falsework or wedges supporting bridge deck placement sections on either side of a joint until each side has aged as these Specifications require.

Placement of concrete for bridge decks and bridge approach slabs shall comply with Section 6-02.3(6). In placing the concrete, the Contractor shall:

1. Place it (without segregation) against concrete placed earlier, as near as possible to its final position, approximately to grade, and in shallow, closely spaced piles;

2. Consolidate it around reinforcing steel by using vibrators before strike-off by the finishing machine;

3. Not use vibrators to move concrete;

4. Not revibrate any concrete surface areas where workers have stopped prior to screeding;

5. Remove any concrete splashed onto reinforcing steel in adjacent segments before concreting them;

6. Maintain a slight excess of concrete in front of the screed across the entire width of the placement operation;

7. Operate the finishing machine to create a surface that is true and ready for final finish without overfinishing or bringing excessive amounts of mortar to the surface; and

8. Leave a thin, even film of mortar on the concrete surface after the last pass of the finishing machine pan.

Workers shall complete all post screeding operations without walking on the concrete. This may require work bridges spanning the full width of the deck/slab.

After removing the screed supports, the Contractor shall fill the voids with concrete (not mortar).

If the surface left by the finishing machine is porous, rough, or has minor irregularities, the Contractor shall float the surface of the concrete. Floating shall leave a smooth and even surface. Float finishing shall be kept to the minimum number of passes necessary to seal the surface. The floats shall be at least 4-feet long. Each transverse pass of the float shall overlap the previous pass by at least half the length of the float. The first floating shall be at right angles to the strike-off. The second floating shall be at right

angles to the centerline of the span. A smooth riding surface shall be maintained across construction joints.

The edge of completed roadway slabs at expansion joints and compression seals shall have a 3/8-inch radius.

After floating, but while the concrete remains plastic, the Contractor shall test the entire deck/slab for flatness (allowing for crown, camber, and vertical curvature). The testing shall be done with a 10-foot straightedge held on the surface. The straightedge shall be advanced in successive positions parallel to the centerline, moving not more than one half the length of the straightedge each time it advances. This procedure shall be repeated with the straightedge held perpendicular to the centerline. An acceptable surface shall be one free from deviations of more than 1/8-inch under the 10-foot straightedge.

If the test reveals depressions, the Contractor shall fill them with freshly mixed concrete, strike off, consolidate, and refinish them. High areas shall be cut down and refinished. Retesting and refinishing shall continue until a surface conforming to the requirements specified above is produced.

6-02.3(10)D4 Monitoring Bridge Deck Concrete Temperature After Placement

The Contractor shall monitor and record the concrete temperature and ambient temperature hourly for seven calendar days after placement. The Contractor shall monitor and record concrete temperature by placing two maturity meter temperature monitoring devices in the bridge deck at locations specified by the Engineer. The Contractor shall monitor ambient temperature using maturity meters near the locations where concrete temperature is being monitored. When the bridge deck is being enclosed and heated to meet cold weather requirements, ambient temperature readings shall be taken within the enclosure. The Contractor shall submit the concrete temperature and ambient temperature data to the Engineer in spreadsheet format within 14 calendar days from placing the bridge deck concrete.

The Contractor shall submit the type and model of maturity meter temperature monitoring device, and the associated devices responsible for recording and documenting the temperature and curing time, to the Engineer at least 14 calendar days prior to the pre-concreting conference for the first bridge deck to be cast. The placement and operation of the temperature monitoring devices and associated devices will be an agenda item at the pre-concreting conference for the first bridge deck to be cast.

6-02.3(10)D5 Bridge Deck Concrete Finishing and Texturing

Except as otherwise specified for portions of bridge decks receiving an overlay or sidewalk under the same Contract, the Contractor shall texture the surface of the bridge deck as follows:

The Contractor shall texture the bridge deck using diamond tipped saw blades mounted on a power driven, self-propelled machine that is designed to texture concrete surfaces. The grooving equipment shall provide grooves that are 1/8" ± 1/64" wide, 3/16" ± 1/16" deep, and spaced at 3/4" ± 1/8". The bridge deck shall not be textured with a metal tined comb.

The Contractor shall submit the type of grooving equipment to be used to the Engineer for approval 30 calendar days prior to performing the work. The Contractor shall demonstrate that the method and equipment for texturing the bridge deck will not chip, spall or otherwise damage the deck. The Contractor shall not begin texturing the bridge deck until receiving the Engineer's approval of the Contractor's method and equipment.

Unless otherwise approved by the Engineer, the Contractor shall texture the concrete bridge deck surface either in a longitudinal direction, parallel with centerline or in a transverse direction, perpendicular with centerline. The Contractor shall texture the bridge deck surface to within 3-inches minimum and 15-inches maximum of the edge of concrete at expansion joints, within 1-foot minimum and 2-feet maximum of the curb line, and within 3-inches minimum and 9-inches maximum of the perimeter of bridge drain assemblies.

The Contractor shall contain and collect all concrete dust and debris generated by the bridge deck texturing process, and shall dispose of the collected concrete dust and debris in accordance with Section 2-03.3(7)C.

If the Plans call for placement of a sidewalk or an HMA or concrete overlay on the bridge deck, the Contractor shall produce the final finish of these areas by dragging a strip of damp, seamless burlap lengthwise over the bridge deck or by brooming it lightly. Approximately 3-feet of the drag shall contact the surface, with the least possible bow in its leading edge. It shall be kept wet and free of hardened lumps of concrete. When the burlap drag fails to produce the required finish, the Contractor shall replace it. When not in use, it shall be lifted clear of the bridge deck.

After the bridge deck has cured, the surface shall conform to the surface smoothness requirements specified in Section 6-02.3(10)D3.

The surface texture on any area repaired to address out-of-tolerance surface smoothness shall match closely that of the surrounding bridge deck area at the completion of the repair. Methods used to remove high spots shall cut through the mortar and aggregate without breaking or dislodging the aggregate or causing spalls.

6-02.3(10)D6 Bridge Approach Slab Finishing and Texturing

Bridge approach slabs shall be textured either in accordance with Section 6-02.3(10)D5, or using metal tined combs in the transverse direction, except bridge approach slabs receiving an overlay in the same Contract shall be finished as specified in Section 6-02.3(10)D5 only.

The comb shall be made of a single row of metal tines. It shall leave striations in the fresh concrete approximately 3/16-inch deep by 1/8-inch wide and spaced approximately 1/2-inch apart. The Engineer will decide actual depths at the site. If the comb has not been approved, the Contractor shall obtain the Engineer's approval by demonstrating it on a test section. The Contractor may operate the combs manually or mechanically, either singly or with several placed end to end. The timing and method used shall produce the required texture without displacing larger particles of aggregate.

Texturing shall end 2-feet from curb lines. This 2-foot untextured strip shall be hand finished with a steel trowel.

Surface smoothness, high spots, and low spots shall be addressed as specified in Section 6-02.3(10)D5. The surface texture on any area cut down or built up shall match closely that of the surrounding bridge approach slab area. The entire bridge approach slab shall provide a smooth riding surface.

6-02.3(11) Curing Concrete

Items number 1 through 4 are deleted and replaced with the following 5 new numbered items:

1. Bridge sidewalks, roofs of cut and cover tunnels — curing compound covered by white, reflective type sheeting or continuous wet curing. Curing by either method shall be for at least 10 days.

2. Bridge decks — See Section 6-02.3(11)B.

3. Bridge approach slabs (Class 4000A concrete) - 2 coats of curing compound and continuous wet cure for at least 10-days.

4. Concrete barriers and rail bases – See Section 6-02.3(11)A.

5. All other concrete surfaces — continuous wet cure for at least three days.

In the second paragraph, the first sentence is replaced with the following three new sentences:

During the continuous wet cure, the Contractor shall keep all exposed concrete surfaces saturated with water. Formed concrete surfaces shall be kept in a continuous wet cure by leaving the forms in place. If forms are removed during the continuous wet cure period, the Contractor shall treat the concrete as an exposed concrete surface.

The third paragraph is revised to read:

When curing Class 4000A, two coats of curing compound that complies with Section 9-23.2 shall be applied immediately (not to exceed 15 min.) after tining any portion of the bridge approach slab. The continuous wet cure shall be established as soon as the concrete has set enough to allow covering without damaging the finish.

In the fifth paragraph, the first sentence is revised to read:

If the Plans call for an asphalt overlay on the bridge approach slab, the Contractor shall use the clear curing compound (Type 1, Class B), applying at least 1 gallon per 150 square feet to the concrete surface.

The eighth paragraph is deleted.

6-02.3(11)B Curing Bridge Decks

This new section is supplemented with the following new sub-sections:

6-02.3(11)B1 Equipment

The Contractor shall maintain a wet sheen, without developing pooling or sheeting water, using a fogging apparatus consisting of pressure washers with a minimum nozzle output of 1,500 psi, or other means approved by the Engineer.

The Contractor shall submit a bridge deck curing plan to the Engineer a minimum 14 calendar days prior to the pre-concreting conference. The Contractor's plan shall describe the sequence and timing that will be used to fog the bridge deck, apply pre-soaked burlap, install soaker hoses and cover the deck with white reflective sheeting.

6-02.3(11)B2 Curing

The fogging apparatus shall be in place and charged for fogging prior to beginning concrete placement for the bridge deck.

The Contractor shall presoak all burlap to be used to cover the deck during curing.

Immediately after the finishing machine passes over finished concrete, the Contractor shall implement the following tasks:

1. The Contractor shall fog the bridge deck while maintaining a wet sheen without developing pooling or sheeting water.

2. The Contractor shall apply the presoaked burlap to the top surface to fully cover the deck without damaging the finish, other than minor marring of the concrete surface. The Contractor shall not apply curing compound.

3. The Contractor shall continue to keep the burlap wet by fog spraying until the burlap is covered by soaker hoses and white reflective sheeting. The Contractor shall place the soaker hoses and whiter reflective sheeting after the concrete has achieved initial set. The Contractor shall charge the soaker hoses frequently so as to keep the burlap covering the entire deck wet during the course of curing.

As an alternative to tasks 2 and 3 above, the Contractor may propose a curing system using proprietary curing blankets specifically manufactured for bridge deck curing. Details of the proprietary curing blanket system, including product literature and details of how the system is to be installed and maintained, shall be submitted to the Engineer for approval.

The wet curing regime as described shall remain in place for at least 14 consecutive calendar days.

6-02.3(12)A Construction Joints in New Construction

The third paragraph is deleted and replaced with the following three new paragraphs:

If the Plans require a roughened surface on the joint, the Contractor shall strike it off to leave grooves at right angles to the length of the member. Grooves shall be installed using one of the following options:

1. Grooves shall be ⅛ to 1 inch wide, ¼ to ½ inch deep, and spaced equally at twice the width of the groove. Grooves shall terminate approximately 1 ½-inches from the face of concrete.

2. Grooves shall be 1 to 2 inches wide, a minimum of ½-inch deep, and spaced a maximum of three times the width of the groove. Grooves shall terminate approximately 1 ½-inches from the face of concrete.

If the Engineer approves, the Contractor may use an alternate method to produce a roughened surface on the joint, provided that such an alternate method leaves a roughened surface of at least a ¼-inch amplitude.

If the first strike-off does not produce the required roughness, the Contractor shall repeat the process before the concrete reaches initial set. The final surface shall be clean and without laitance or loose material.

6-02.3(15) Date Numerals

The third sentence in the first paragraph is revised to read:

When an existing Structure is widened or when traffic barrier is placed on an existing Structure, the date shall be for the year in which the original Structure was completed.

6-02.3(16) Plans for Falsework and Formwork

This section is revised to read:

The Contractor shall submit all plans for falsework and formwork as Type 2E Working Drawings. Submittal is not required for footing or retaining wall formwork if the wall is 4 feet or less in height (excluding pedestal height).

The design of falsework and formwork shall be based on:

1. Applied loads and conditions which are no less severe than those described in Section 6-02.3(17)A, Design Loads;

2. Allowable stresses and deflections which are no greater than those described in Section 6-02.3(17)B, Allowable Stresses and Deflections;

3. Special loads and requirements no less severe than those described in Section 6-02.3(17)C, Falsework and Formwork at Special Locations;

4. Conditions required by other Sections of 6-02.3(17), Falsework and Formwork.

The falsework and formwork plans shall be scale drawings showing the details of proposed construction, including: sizes and properties of all members and components; spacing of bents, posts, studs, wales, stringers, wedges and bracing; rates of concrete placement, placement sequence, direction of placement, and location of construction joints; identification of falsework devices and safe working loads as well as identification of any bolts or threaded rods used with the devices including their diameter, length, type, grade, and required torque. The falsework plans shall show the proximity of falsework to utilities or any nearby Structures including underground Structures. Formwork accessories shall be identified according to Section 6-02.3(17)H, Formwork Accessories. All assumptions, dimensions, material properties, and other data used in making the structural analysis shall be noted on the drawing.

The Contractor shall furnish associated design calculations to the Engineer as part of the submittal. The design calculations shall show the stresses and deflections in load supporting members. Construction details which may be shown in the form of sketches on the calculation sheets shall be shown in the falsework or formwork drawings as well. Falsework or formwork plans will be rejected in cases where it is necessary to refer to

the calculation sheets for information needed for complete understanding of the falsework and formwork plans or how to construct the falsework and formwork.

Each sheet of falsework and formwork plans shall carry the following:

1. The initials and dates of all participating design professionals.

2. Clear notation of all revisions including identification of who authorized the revision, who made the revision, and the date of the revision.

3. The Contract number, Contract title, and sequential sheet number. These shall also be on any related documents.

4. Identify where the falsework and formwork plan will be utilized by referencing Contract Plan sheet number and related item or detail.

6-02.3(16)A Nonpreapproved Falsework and Formwork Plans

This section, including title, is deleted in its entirety and replaced with the following:

6-02.3(16)A Vacant

6-02.3(16)B Preapproved Formwork Plans

This section, including title, is revised to read:

6-02.3(16)B Pre-Contract Review of Falsework and Formwork Plans

The Contractor may request pre-contract review of formwork plans for abutments, wingwalls, diaphragms, retaining walls, columns, girders and beams, box culverts, railings, and bulkheads. Plans for falsework supporting the bridge deck for interior spans between precast prestressed concrete girders may also be submitted for pre-contract review.

To obtain pre-contract review, the Contractor shall electronically submit drawings and design calculations in PDF format directly to:

BridgeConstructionSupport@wsdot.wa.gov

The Bridge and Structures Office, Construction Support Engineer will return the falsework or formwork plan to the Contractor with review notes, an effective date of review, and any revisions needed prior to use. For each contract on which the pre-reviewed falsework or formwork plans will be used, the Contractor shall submit a copy to the Engineer. Construction shall not begin until the Engineer has given concurrence.

If the falsework or formwork being constructed has any deviations to the preapproved falsework or formwork plan, the Contractor shall submit plan revisions for review and approval in accordance with Section 6-02.3(16).

6-02.3(17)A Design Loads

The fifth paragraph is revised to read:

Live loads shall consist of a minimum uniform load of not less than 25 psf, applied over the entire falsework plan area, plus the greater of:

1. Actual weights of the deck finishing equipment applied at the rails, or;

2. A minimum load of 75 pounds per linear foot applied at the edge of the bridge deck.

6-02.3(17)J Face Lumber, Studs, Wales, and Metal Forms

The second to last paragraph is deleted.

6-02.3(17)O Early Concrete Test Cylinder Breaks

The third paragraph is revised to read:

The cylinders shall be cured in the field in accordance with WSDOT FOP for AASHTO T 23 Section 10.2 Field Curing.

6-02.3(20) Grout for Anchor Bolts and Bridge Bearings

The first five paragraphs are deleted and replaced with the following two new paragraphs:

Grout shall conform to Section 9-20.3(2) for anchor bolts and for bearing assemblies with bearing plates. Grout shall conform to Section 9-20.3(3) for elastomeric bearing pads and fabric pad bearings without bearing plates.

Grout shall be a workable mix with a viscosity that is suitable for the intended application. The Contractor shall receive approval from the Engineer before using the grout.

6-02.3(26)F Prestressing Reinforcement

The last sentence in the fourth paragraph is revised to read:

If the prestressing reinforcement will not be stressed and grouted for more than 7 calendar days after it is placed in the ducts, the Contractor shall place an approved corrosion inhibitor conforming to Federal Specification MIL-I-22110C in the ducts.

6-02.5 Payment

In the paragraph following the bid item “Commercial Concrete”, per cubic yard the second sentence is revised to read:

All costs in connection with concrete curing, and furnishing and applying pigmented sealer to concrete surfaces as specified, shall be included in the unit contract price per cubic yard for "Conc. Class ____".

The following new paragraph is inserted after the bid item “Superstructure (name bridge)”, lump sum:

All costs in connection with constructing, finishing and removing the bridge deck test slab as specified in Section 6-02.3(10)D1 shall be included in the lump sum Contract price for “Superstructure___” or “Bridge Deck___” for one bridge in each project, as applicable.

The bid item “Cure Box”, lump sum and paragraph following bid item are deleted.

6-03.AP6

Section 6-03, Steel Structures
August 4, 2014

6-03.3(25)A3 Ultrasonic Inspection

The following new paragraph is inserted before the last paragraph:

A minimum of 30 percent of complete penetration vertical welds on steel column jackets thicker than 5/16-inch, within 1.50 column jacket diameter of the top and bottom of each column, shall be inspected. If any rejectable flaws are found, 100 percent of the weld within the specified limits shall be inspected. The largest column cross section diameter for tapered column jackets shall constitute one column jacket diameter.

6-03.3(25)A4 Magnetic Particle Inspection

Items number 3 and 4 are revised to read:

3. Complete penetration groove welds on plates $^{5}/_{16}$-inch or thinner (excluding steel column jackets) shall be 100 percent tested by the magnetic particle method. Testing shall apply to both sides of the weld, if backing plate is not used. The ends of each complete penetration groove weld at plate edges shall be tested by the magnetic particle method.

4. A minimum of 30 percent of complete penetration vertical welds on steel column jackets $^{5}/_{16}$-inch or thinner, within 1.50 column jacket diameters of the top and bottom of each column, shall be magnetic particle inspected. The largest column cross section diameter for tapered column jackets shall constitute one column jacket diameter.

The last paragraph is supplemented with the following new sentence:

If any rejectable flaws are found in any test length of item 4 above, 100 percent of the weld within the specified limits shall be inspected.

6-03.3(29) Welded Shear Connectors

This section's content is deleted and replaced with the following:

Installation, production control, and inspection of welded shear connectors shall conform to Chapter 7 of the AASHTO/AWS D1.5M/D1.5:2010 Bridge Welding Code. If welded shear connectors are installed in the shop, installation shall be completed prior to applying the shop primer coat in accordance with Section 6-07.3(9)G. If welded shear connectors are installed in the field to a surface prepared in accordance with Section 6-07.3(9)G, no further surface preparation is necessary provided the shear connectors pass the production control testing required by Chapter 7 of the AASHTO/AWS D1.5M/D1.5:2010 Bridge Welding Code.

6-05.AP6

Section 6-05, Piling
March 3, 2014

6-05.3(4) Manufacture of Steel Casings for Cast-In-Place Concrete Piles

This section is revised to read:

The diameter of steel casings shall be as specified in the Contract. A full-penetration groove weld between welded edges is required.

6-05.3(5) Manufacture of Steel Piles

This section is revised to read:

Steel piles shall be made of rolled steel H-pile sections, steel pipe piles, or of other structural steel sections described in the Contract. A full-penetration groove weld between welded edges is required.

6-05.3(6) Splicing Steel Casings and Steel Piles

This section is revised to read:

The Engineer will normally permit steel piles and steel casings for cast-in-place concrete piles to be spliced. But in each case, the Contractor shall obtain approval on the need and the method for splicing. Welded splices shall be spaced at a minimum distance of 10 feet. Only welded splices will be permitted.

Splice welds for steel piles shall comply with Section 6-03.3(25) and AWS D1.1/D1.1M, latest edition, Structural Welding Code. Splicing of steel piles shall be performed in accordance with an approved weld procedure. The Contractor shall submit a weld procedure to the Engineer for approval prior to welding. For ASTM A 252 material, mill certification for each lot of pipe to be welded shall accompany the submittal. The ends of all steel pipe piling shall meet the fit-up requirements of AWS D1.1/D1.1M, latest edition, Structural Welding Code Section 5.22.3.1, “Girth Weld Alignment (Tubular),” when the material is spliced utilizing a girth weld.

Splice welds of steel casings for cast-in-place concrete piles shall be the Contractor’s responsibility and shall be welded in accordance with AWS D1.1/D1.1M, latest edition, Structural Welding Code. A weld procedure submittal is not required for steel casings used for cast-in-place concrete piles. Casings that collapse or are not watertight, shall be replaced at the Contractor’s expense.

6-07.AP6

Section 6-07, Painting
January 6, 2014

6-07.3(10)E Surface Preparation – Full Paint Removal

This section is revised to read:

For structures where full removal of existing paint is specified, the Contractor shall remove any visible oil, grease, and road tar in accordance with SSPC-SP 1.

Following preparation by SSPC-SP 1, all steel surfaces to be painted shall be prepared in accordance with SSPC-SP 10, near-white metal blast cleaning. Surfaces inaccessible to near-white metal blast cleaning shall be prepared in accordance with SSPC-SP 11, power tool cleaning to bare metal, as allowed by the Engineer.

6-14.AP6

Section 6-14, Geosynthetic Retaining Walls
April 7, 2014

6-14.2 Materials
In the first paragraph, the section number next to "Anchor rods and associated nuts, washers and couplers" is revised to read:

9-06.5(4)

The following new paragraph is inserted after the first paragraph:

Anchor plate shall conform to ASTM A 36, ASTM A 572 Grade 50, or ASTM A 588.

8-01.AP8

Section 8-01, Erosion Control and Water Pollution Control
August 4, 2014

8-01.2 Materials
This section is supplemented with the following new paragraph:

For all seed the Contractor shall furnish the Engineer with the following documentation:

1. The state or provincial seed dealer license and endorsements.

2. Copies of Washington State Department of Agriculture (WSDA) test results on each lot of seed. Test results must be within six months prior to the date of application.

8-01.3(1)A Submittals
The first sentence in the second paragraph is revised to read:

Modified TESC Plans shall meet all requirements of the current edition of the WSDOT Temporary Erosion and Sediment Control Manual M 3109.

8-01.3(2)A Preparation for Application
This section's content is deleted and replaced with the following two new subsections:

8-01.3(2)A1 Seeding
Areas to be cultivated are shown in the Plans or specified in the Special Provisions. The areas shall be cultivated to the depths specified to provide a reasonably firm but friable seedbed. Cultivation shall take place no sooner than 2 weeks prior to seeding.

All areas to be seeded, including excavated slopes shall be compacted and prepared unless otherwise specified or ordered by the Engineer. A cleated roller, crawler tractor, or similar equipment that forms longitudinal depressions at least 2 inches deep shall be used for compaction and preparation of the surface to be seeded.

The entire area shall be uniformly covered with longitudinal depressions formed perpendicular to the natural flow of water on the slope. The soil shall be conditioned with sufficient water so the longitudinal depressions remain in the soil surface until completion of the seeding.

Prior to seeding, the finished grade of the soil shall be 1 inch below the top of all curbs, junction and valve boxes, walks, driveways, and other Structures. The soil shall be in a weed free and bare condition.

All bags of seed shall be brought to the site in sealed bags and shall have seed labels attached showing the seed meets the Specifications. Seed which has become wet, moldy, or otherwise damaged in transit or storage will not be accepted.

8-01.3(2)A2 Temporary Seeding

A cleated roller, crawler tractor, or similar equipment that forms longitudinal depressions at least 2 inches deep shall be used for compaction and preparation of the surface to be seeded. The entire area shall be uniformly covered with longitudinal depressions formed perpendicular to the natural flow of water on the slope. The soil shall be conditioned with sufficient water so the longitudinal depressions remain in the soil surface until completion of the seeding.

8-01.3(2)B Seeding and Fertilizing

In the list in the second paragraph, item numbers 1-5 are revised to read:

1. A hydro seeder that utilizes water as the carrying agent, and maintains continuous agitation through paddle blades. It shall have an operating capacity sufficient to agitate, suspend, and mix into a homogeneous slurry the specified amount of seed and water or other material. Distribution and discharge lines shall be large enough to prevent stoppage and shall be equipped with a set of hydraulic discharge spray nozzles that will provide a uniform distribution of the slurry.

2. Blower equipment with an adjustable disseminating device capable of maintaining a constant, measured rate of material discharge that will ensure an even distribution of seed at the rates specified.

3. Helicopters properly equipped for aerial seeding.

4. Power-drawn drills or seeders.

5. Areas in which the above methods are impractical may be seeded by hand methods.

8-01.3(2)C Liming

This section including title is deleted in its entirety and replaced with the following:

8-01.3(2)C Vacant

8-01.3(2)D Mulching

The first sentence of the second paragraph is revised to read:

Distribution of straw mulch material shall be by means that utilizes forced air to blow mulch material on seeded areas.

8-01.4 Measurement

In the twelfth paragraph, “liming” is deleted.

8-01.5 Payment

The bid item “Liming”, per acre is deleted.

8-02.AP8

Section 8-02, Roadside Restoration
August 4, 2014

8-02.3(1) Responsibility During Construction

The last sentence of the second paragraph is revised to read:

This Work shall include keeping the planted and seeded areas free from insect infestation, weeds or unwanted vegetation, litter, and other debris along with retaining the finished grades and mulch in a neat uniform condition.

8-02.3(2) Roadside Work Plan

This section’s title is revised to read:

Work Plans

This section’s content is deleted in its entirety and replaced with the following new subsections:

8-02.3(2)A Roadside Work Plan

Before starting any Work that disturbs the earth and as described in Sections 8-01, 8-02 and 8-03, the Contractor shall submit a roadside work plan. The roadside work plan shall be submitted as a Type 1 Working Drawing and shall define the Work necessary to provide all Contract requirements, including: wetland excavation, soil preparation, habitat structure placement, planting area preparation, seeding area preparation, bark mulch and compost placement, seeding, planting, plant replacement, irrigation, and weed control in narrative form.

The Roadside Work Plan shall also include a copy of the approved progress schedule.

8-02.3(2)B Weed and Pest Control Plan

The Weed and Pest Control Plan shall be submitted as a Type 1 Working Drawing. The weed and pest control plan shall include scheduling and methods of all control measures required under the Contract or proposed by the Contractor including soil preparation methods to meet the required soil surface conditions in the planting, bark mulch, and wetland areas. The weed control plan shall show general weed control including hand, mechanical and chemical methods, timing, application of herbicides

including type, rate, use and timing, mowing, and noxious weed control. Target weeds and unwanted vegetation to be removed shall be identified and listed in the weed control plan.

The plan shall be prepared and signed by a licensed Commercial Pest Control Operator or Consultant when chemical pesticides are proposed. The plan shall include methods of weed control; dates of weed control operations; and the name, application rate, and Material Safety Data Sheets of all proposed herbicides. In addition, the Contractor shall furnish the Engineer with a copy of the current product label for each pesticide and spray adjuvant to be used. These product labels shall be submitted with the weed control plan for approval.

8-02.3(2)C Plant Establishment Plan

The Plant Establishment Plan shall be prepared in accordance with the requirements of Section 8-02.3(13) and submitted as a Type 1 Working Drawing. The Plan shall show the proposed scheduling of activities, materials, equipment to be utilized for the first-year plant establishment, and an emergency contact person. The Plan shall include the management of the irrigation system, when applicable. Should the plan become unworkable at any time during the first-year plant establishment, the Contractor shall submit a revised plan prior to proceeding with further Work.

8-02.3(3) Weed and Pest Control

This section is supplemented with the following new paragraph:

Grass, including grass applied in accordance with Section 8-01, growing within the mulch ring of a plant shall be considered a weed and be controlled on the project in accordance with the weed and pest control plan.

8-02.3(4) Topsoil

The last sentence of the first paragraph is revised to read:

After the topsoil has been spread, all large clods, hard lumps, and rocks 2 inches in diameter and larger, and litter shall be raked up, removed, and disposed of by the Contractor.

The following new paragraph is inserted after the first paragraph:

Topsoil stockpiled for project use shall be protected to prevent erosion and weed growth. Weed growth on topsoil stockpile sites shall be immediately eliminated in accordance with the approved Weed and Pest Control Plan.

8-02.3(4)C Topsoil Type C

The last sentence is revised to read:

Topsoil Type C shall meet the requirements of Sections 8-02.3(4), 8-02.3(4)B, and 9-14.1(3).

8-02.3(13) Plant Establishment

The first sentence of the second paragraph is deleted.

The second paragraph is supplemented with the following new sentence:

The 1 calendar year shall be extended an amount equal to any periods where the Contractor does not comply with the plant establishment plan.

The first sentence of the fourth paragraph is revised to read:

During the first year of plant establishment under PSIPE (Plant Selection Including Plant Establishment), the Contractor shall meet monthly with the Engineer for the purpose of joint inspection of the planting material on a mutually agreed upon schedule.

8-02.5 Payment

The paragraph following the bid item "Topsoil Type ____", per acre is revised to read:

The unit Contract price per acre for "Topsoil Type ____" shall be full payment for all costs for the specified Work.

The bid item "Plant Establishment - ____ Year" is deleted.

8-04.AP8

Section 8-04, Curbs, Gutters, and Spillways
August 4, 2014

8-04.3(1) Cement Concrete Curbs, Gutters, and Spillways

The first sentence in the fourth paragraph is revised to read:

Expansion joints in the curb or curb and gutter shall be spaced as shown in the Plans, and placed at the beginning and ends of curb returns, drainage Structures, bridges, and cold joints with existing curbs and gutters.

In the third sentence of the fourth paragraph, "¼-inch" is revised to read "⅜-inch".

8-04.3(1)A Extruded Cement Concrete Curb

The second sentence in the second paragraph is revised to read:

Cement concrete curbs shall be anchored to the existing pavement by placing steel reinforcing bars 1 foot on each side of every joint.

The third paragraph is revised to read:

Steel reinforcing bars shall meet the dimensions shown in the Standard Plans.

8-09.AP8

Section 8-09, Raised Pavement Markers
April 7, 2014

8-09.3(6) Recessed Pavement Marker

The following sentence is inserted after the first sentence of the first paragraph:

The Contractor shall ensure that grinding of the pavement does not result in any damage, (e.g. chipping, spalling or raveling) to the pavement to remain.

8-11.AP8

Section 8-11, Guardrail
April 7, 2014

8-11.3(1) Beam Guardrail

After the below Amendments to 8-11.3(1)F and 8-11.3(1)G are applied, this section is supplemented with the following new sub-section:

8-11.3(1)F Removing and Resetting Beam Guardrail

The Contractor shall remove and reset existing guardrail posts, rail element, hardware and blocks to the location shown in the Plans. The mounting height of reset rail element shall be at the height shown in the Plans. The void caused by the removal of the post shall be backfilled and compacted.

The Contractor shall remove and replace any existing guardrail posts and blocks that are not suited for re-use, as staked by the Engineer. The void caused by the removal of the post shall be backfilled and compacted. The Contractor shall then furnish and install a new guardrail post to provide the necessary mounting height.

8-11.3(1)A Erection of Posts

The second paragraph in this section is deleted.

8-11.3(1)C Terminal and Anchor Installation

The last sentence in the last paragraph is deleted.

8-11.3(1)F Plans

This section number is revised to:

8-11.3(1)G

8-11.3(1)G Guardrail Construction Exposed to Traffic

This section number is revised to:

8-11.3(1)H

8-18.AP8

Section 8-18, Mailbox Support
August 4, 2014

8-18.3(1) Type 3 Mailbox Support

In the third paragraph, the first sentence is revised to read:

With the Engineer's consent, a Type 3 Mailbox Support design, made of steel or other durable material, that meets the NCHRP 350 or the Manual for Assessing Safety Hardware (MASH) crash test criteria may be used in place of the design shown in the *Standard Plans*.

8-20.AP8

Section 8-20, Illumination, Traffic Signal Systems, Intelligent Transportation Systems, and Electrical
August 4, 2014

8-20.2(1) Equipment List and Drawings
The fifth paragraph is revised to read:

> The Contractor will not be required to submit shop drawings for approval for light standards and traffic signal standards conforming to the preapproved plans listed in the Special Provisions. The Contractor may use preapproved plans posted on the WSDOT website with a more current revision date than published in the Special Provisions.

8-20.3(8) Wiring
The second sentence in the eleventh paragraph is revised to read:

> Every conductor at every wire termination, connector, or device shall have an approved wire marking sleeve bearing, as its legend, the circuit number indicated in the Contract.

8-20.3(13)A Light Standards
In the third paragraph, the last sentence of item number 1 is revised to read:

> Conduit shall extend a maximum of 1 inch above the top of the foundation, including grounding end bushing or end bell bushing.

In the fourth paragraph, the second sentence of item number 1 is revised to read:

> Conduits shall be cut to a maximum height of 2 inches above the foundation including grounding end bushing or end bell bushing.

8-23.AP8

Section 8-23, Temporary Pavement Markings
April 14, 2014

This section's content is deleted in its entirety and replaced with the following new sub-sections:

> **8-23.1 Description**
> The Work consists of furnishing, installing, and removing temporary pavement markings. Temporary pavement markings shall be provided where noted in the Plans; for all lane shifts and detours resulting from construction activities; or when permanent markings are removed because of construction operations.
>
> **8-23.2 Materials**
> Materials for temporary markings shall be paint, plastic, tape, raised pavement markers or flexible raised pavement markers. Materials for pavement markings shall meet the following requirements:
>
> Raised Pavement Markers 9-21

Temporary Marking Paint	9-34.2(6)
Plastic	9-34.3
Glass Beads for Pavement Marking Materials	9-34.4
Temporary Pavement Marking Tape	9-34.5
Temporary Flexible Raised Pavement Markers	9-34.6

8.23.3 Construction Requirements

8-23.3(1) General

The Contractor shall select the type of pavement marking material in accordance with the Contract.

8-23.3(2) Preliminary Spotting

All preliminary layout and marking in preparation for application or removal of temporary pavement markings shall be the responsibility of the Contractor.

8-23.3(3) Preparation of Roadway Surface

Surface preparation for temporary pavement markings shall be in accordance with the manufacturer's recommendations.

8-23.3(4) Pavement Marking Application

8-23.3(4)A Temporary Pavement Markings – Short Duration

Temporary pavement markings – short duration shall meet the following requirements:

Temporary Center Line – A BROKEN line used to delineate adjacent lanes of traffic moving in opposite directions. The broken pattern shall be based on a 40-foot unit, consisting of a 4-foot line with a 36-foot gap if paint or tape is used. If temporary raised pavement markers are used, the pattern shall be based on a 40-foot unit, consisting of a grouping of three temporary raised pavement markers, each spaced 3 feet apart, with a 34 foot gap.

Temporary Edge Line – A SOLID line used on the edges of Traveled Way. The line shall be continuous if paint or tape is used. If temporary raised pavement markers are used, the line shall consist of markers installed continuously at 5-foot spacing.

Temporary Lane Line – A BROKEN line used to delineate adjacent lanes with traffic traveling in the same direction. The broken pattern shall be based on a 40-foot unit, consisting of a 4-foot line with a 36-foot gap, if paint or tape is used. If temporary raised pavement markers are used, the pattern shall be based on a 40-foot unit, consisting of a grouping of three temporary raised pavement markers, each spaced 3 feet apart, with a 34 foot gap.

Lane line and right edge line shall be white in color. Center line and left edge line shall be yellow in color. Edge lines shall be installed only if specifically required in the Contract. All temporary pavement markings shall be retroreflective.

8-23.3(4)A1 Temporary Pavement Marking Paint
Paint used for short duration temporary pavement markings shall be applied in one application at a thickness of 15 mils or 108 square feet per gallon. Glass beads shall be in accordance with Section 8-22.3(3)G.

8-23.3(4)A2 Temporary Pavement Marking Tape
Application of temporary pavement marking tape shall be in conformance with the manufacturer's recommendations.

Black mask pavement marking tape shall mask the existing line in its entirety.

8-23.3(4)A3 Temporary Raised Pavement Markers
Temporary raised pavement markers are not allowed on bituminous surface treatments.

8-23.3(4)A4 Temporary Flexible Raised Pavement Markers
Flexible raised pavement markers are required for new applications of bituminous surface treatments. Flexible raised pavement markers are not allowed on other pavement types unless otherwise specified or approved by the Engineer. Flexible raised pavement markers shall be installed with the protective cover in place. The cover shall be removed immediately after spraying asphaltic material.

8-23.3(4)B Temporary Pavement Markings – Long Duration
Application of paint, pavement marking tape and plastic for long duration pavement markings shall meet the requirements of Section 8-22.3(3); application of raised pavement markers shall meet the requirements of Section 8-09.3; and application of flexible pavement markings shall be in conformance with the manufacturer's recommendations.

8-23.3(4)C Tolerance for Lines
Tolerance for lines shall conform to Section 8-22.3(4).

8-23.3(4)D Maintenance of Pavement Markings
Temporary pavement markings shall be maintained in serviceable condition throughout the project until permanent pavement markings are installed. As directed by the Engineer; temporary pavement markings that are damaged, including normal wear by traffic, shall be repaired or replaced immediately. Repaired and replaced pavement markings shall meet the requirements for the original pavement marking.

8-23.3(4)E Removal of Pavement Markings
Removal of temporary paint is not required prior to paving; all other temporary pavement markings shall be removed.

All temporary pavement markings that are required on the wearing course prior to construction of permanent pavement markings and are not a part of the permanent markings shall be completely removed concurrent with or immediately subsequent to the construction of the permanent pavement markings. Temporary flexible raised pavement markers on bituminous surface

treatment pavements shall be cut off flush with the surface if their location conflicts with the alignment of the permanent pavement markings.

All damage to the permanent Work caused by removing temporary pavement markings shall be repaired by the Contractor at no additional cost to the Contracting Agency.

8-23.4 Measurement

Temporary pavement markings will be measured by the linear foot of each installed line or grouping of markers, with no deduction for gaps in the line or markers and no additional measurement for the second application of paint required for long duration paint lines. Short duration and long duration temporary pavement markings will be measured for the initial installation only; maintenance of lines will not be measured.

8-23.5 Payment

Payment will be made in accordance with Section 1-04.1, for each of the following Bid items that are included in the Proposal:

"Temporary Pavement Marking – Short Duration", per linear foot.

"Temporary Pavement Marking – Long Duration", per linear foot.

The unit Contract price per linear foot for "Temporary Pavement Marking – Short Duration" and "Temporary Pavement Marking – Long Duration" shall be full pay for all Work.

9-03.AP9

Section 9-03, Aggregates
August 4, 2014

9-03.1(2)C Use of Substandard Gradings

This section including title is deleted in its entirety and replaced with the following:

Vacant

9-03.1(4)C Grading

In the second paragraph, the first sentence is deleted.

The third paragraph is deleted.

9-03.1(5)B Grading

The last paragraph is revised to read:

The Contracting Agency may sample each aggregate component prior to introduction to the weigh batcher or as otherwise determined by the Engineer. Each component will be sieve analyzed separately in accordance with WSDOT FOP for WAQTC/AASHTO Test Method T-27/11. All aggregate components will be mathematically re-combined by the proportions (percent of total aggregate by weight) provided by the Contractor on Concrete Mix Design Form 350-040.

9-03.8(1) General Requirements

The first paragraph up until the colon is revised to read:

Preliminary testing of aggregates for source approval shall meet the following test requirements:

The list in the first paragraph is supplemented with the following:

Sand Equivalent 45 min.

The following new paragraph is inserted after the first paragraph:

Aggregate sources that have 100 percent of the mineral material passing the No. 4 sieve shall be limited to no more than 5 percent of the total weight of aggregate.

9-03.14(3) Common Borrow

This section is revised to read:

Material for common borrow shall consist of granular or nongranular soil and/or aggregate which is free of deleterious material. Deleterious material includes wood, organic waste, coal, charcoal, or any other extraneous or objectionable material. The material shall not contain more than 3 percent organic material by weight. The plasticity index shall be determined using test method AASHTO T 89 and AASHTO T 90.

The material shall meet one of the options in the soil plasticity table below.

Soil Plasticity Table

Option	Sieve	Percent Passing	Plasticity Index
1	No. 200	0 - 12	N/A
2	No. 200	12.1 - 35	6 or Less
3	No. 200	Above 35	0

All percentages are by weight.

If requested by the Contractor, the plasticity index may be increased with the approval of the Engineer.

9-03.14(4) Gravel Borrow for Structural Earth Wall

In the second table, the row beginning with “pH” is revised to read:

pH	WSDOT Test Method T 417	4.5 - 9	5 – 10

9-05.AP9

Section 9-05, Drainage Structures and Culverts
April 7, 2014

9-05.13 Ductile Iron Sewer Pipe
The first paragraph is deleted.

9-07.AP9

Section 9-07, Reinforcing Steel
January 6, 2014

9-07.5(2) Corrosion Resistant Dowel Bars (for Cement Concrete Pavement)
This section's title is revised to read:

9-07.5(2) Corrosion Resistant Dowel Bars (for Cement Concrete Pavement and Cement Concrete Pavement Rehabilitation)

9-09.AP9

Section 9-09, Timber and Lumber
January 6, 2014

9-09.3(1) General Requirements
The fourth paragraph is revised to read:

All orders of treated timber and lumber shall be accompanied by a Certificate of Treatment record. The Certificate of Treatment showing conformance to this specification and AWPA standards shall include the following information:

- Name and location of the wood preserving company,
- Customer identification,
- Date of treatment and charge number,
- Type of chemical used and amount of retention,
- Treating process and identification of the Specification used,
- Boring records verifying treatment penetration for timber and lumber with a nominal dimension of 6" x 6" or larger,
- Description of material that was treated, and
- Signature of a responsible plant official.

The fifth paragraph is deleted.

The first sentence in the last paragraph is revised to read:

All timber and lumber to be used in aquatic environments, unless specified otherwise in the Contract, shall be chemically treated using Western Wood Preservers Institute Best Management Practices (BMPs).

9-10.AP9

Section 9-10, Piling
March 3, 2014

9-10.5 Steel Piling

This section is revised to read:

The material for rolled steel piling H-piling and pile splices shall conform to ASTM A 36, ASTM A 572 or ASTM A 992. The material for steel pipe piling and splices shall conform to one of the following requirements except as specifically noted in the Plans:

1. API 5L Grade X42 or X52 material may be used for longitudinal seam welded or helical (spiral) seam submerged-arc welded pipe piles of any diameter.
2. ASTM A 252 Grade 2 or 3 material may be used for longitudinal seam welded or helical (spiral) seam submerged-arc welded pipe piles of any diameter. For the purposes of welding and prequalification of base metal, steel pipe pile designated as ASTM A 252 may be treated as prequalified provided the chemical composition conforms to a prequalified base metal classification listed in Table 3.1 of the AWS D1.1/D1.1M, latest edition, Structural Welding Code, the grade of pipe piling meets or exceeds the grade specified in the Plans, and the carbon equivalent (CE) is a maximum of 0.45-percent.
3. ASTM A 572 or ASTM A 588 material may be used for longitudinal seam welded piles of any diameter.

For helical (spiral) seam submerged-arc welded pipe piles, the maximum radial offset of strip/plate edges shall be 1/8 inch. The offset shall be transitioned with a taper weld and the slope shall not be less than a 1 in 2.5 taper. The weld reinforcement shall not be greater than 3/16 inches and misalignment of weld beads shall not exceed 1/8 inch.

Steel soldier piles, and associated steel bars and plates, shall conform to ASTM A 36, ASTM A 572 or ASTM A 992, except as otherwise noted in the Plans.

All steel piling may be accepted by the Engineer based on the Manufacturer's Certificate of Compliance submitted in accordance with Section 1-06.3. The manufacturer's certificate of compliance submittal for steel pipe piles shall be accompanied by certified mill test reports, including chemical analysis and carbon equivalence, for each heat of steel used to fabricate the steel pipe piling.

9-14.AP9

Section 9-14, Erosion Control and Roadside Planting
August 4, 2014

9.14.1 Soil

This section, including title, is revised to read:

9-14.1 Topsoil

Topsoil shall not contain any recycled material, foreign materials, or any listed Noxious and Nuisance weeds of any Class designated by authorized State or County officials. Aggregate shall not comprise more than 10% by volume of Topsoil and shall not be greater than two inches in diameter.

9-14.1(2) Topsoil Type B

The last sentence of the second paragraph is deleted.

9-14.2 Seed

This section is revised to read:

Seed of the type specified shall be certified in accordance with WAC 16-302. Seed mixes shall be commercially prepared and supplied in sealed containers. The labels shall show:

(1) Common and botanical names of seed
(2) Lot number
(3) Net weight
(4) Pounds of Pure live seed (PLS) in the mix
(5) Origin of seed

All seed vendors must have a business license issued by supplier's state or provincial Department of Licensing with a "seed dealer" endorsement.

9-14.4(3) Bark or Wood Chips

This section's title is revised to read:

Bark or Wood Chip Mulch

The first paragraph is revised to read:

Bark or wood chip mulch shall be derived from fir, pine, or hemlock species. It shall not contain resin, tannin, or other compounds in quantities that would be detrimental to plant life. Sawdust shall not be used as mulch. Mulch produced from finished wood products or construction debris will not be allowed.

9-14.4(6) Gypsum

The first sentence is revised to read:

Gypsum shall consist of Calcium Sulfate ($CaSO_4 \cdot 2H_2O$) in a pelletized or granular form.

9-14.4(7) Tackifier

This section is revised to read:

Tackifiers are used as a tie-down for soil, compost, seed, and/or mulch. Tackifiers shall contain no growth or germination-inhibiting materials and shall not reduce infiltration rates. Tackifiers shall hydrate in water and readily blend with other slurry materials.

The Contractor shall provide test results documenting the tackifier meets the requirements for Acute Toxicity, Solvents, and Heavy Metals as required in Table 1 in Section 9-14.4(2). The tests shall be performed at the manufacturer's recommended application rate.

9-14.4(8) Compost

The second paragraph is revised to read:

Compost production and quality shall comply with WAC 173-350.

9-14.4(8)A Compost Submittal Requirements

Item 2 is revised to read:

5. A copy of the Solid Waste Handling Permit issued to the manufacturer by the Jurisdictional Health Department in accordance with WAC 173-350 (Minimum Functional Standards for Solid Waste Handling).

9-14.6(2) Quality

The second and third paragraphs in this section are revised to read:

All plant material shall comply with State and Federal laws with respect to inspection for plant diseases and insect infestation. Plants must meet Washington State Department of Agriculture plant quarantines and have a certificate of inspection. Plants originating in Canada must be accompanied by a phytosanitary certificate stating the plants meet USDA health requirements.

All plant material shall be purchased from a nursery licensed to sell plants in their state or province.

9-15.AP9

Section 9-15, Irrigation System
August 4, 2014

9-15.18 Detectable Marking Tape

In the second paragraph, the table is supplemented with the following new row:

Non-Potable Water	Purple

9-16.AP9

Section 9-16, Fence and Guardrail
August 4, 2014

9-16.2(1)B Wood Fence Posts and Braces

In the table, the row beginning with “ACA” is deleted.

9-29.AP9

Section 9-29, Illumination, Signal, Electrical
August 4, 2014

9-29.2(1)B Heavy Duty Junction Boxes

The second paragraph is revised to read:

The Heavy-Duty Junction Box steel frame, lid support and lid fabricated from steel plate and shapes shall be painted with a shop applied, inorganic zinc primer in accordance with Section 6-07.3. Ductile iron and gray iron castings shall not be painted.

The following new paragraph is inserted after the second paragraph:

The concrete used in Heavy-Duty Junction Boxes shall have a minimum compressive strength of 4,000 psi.

In the fourth paragraph (after the preceding Amendment is applied), the table is revised to read:

Materials	**Requirement**
Concrete	Section 6-02
Reinforcing Steel	Section 9-07
Lid	ASTM A 786 diamond plate steel, rolled from plate complying with ASTM A 572, grade 50 or ASTM A 588, and having a min. CVN toughness of 20 ft-lb at 40 degrees F. Or Ductile iron casting meeting Section 9-05.15
Frame and stiffener plates	ASTM A 572 grade 50 or ASTM A 588, both with min. CVN toughness of 20 ft-lb at 40 degrees F Or Gray iron casting meeting Section 9-05.15
Anchors (studs)	Section 9-06.15
Threaded Anchors for Gray Iron Frame	ASTM F1554 grade 55 Headed Anchor Requirements
Bolts, Studs, Nuts, Washers	ASTM F 593 or A 193, Type 304 or 316, or Stainless steel grade 302, 304, or 316 in accordance with approved shop drawings
Hinges and Locking and Latching Mechanism and associated Hardware and Bolts	In accordance with approved shop drawings
Safety Bars	In accordance with approved shop drawings

The last paragraph is revised to read:

The bearing seat and lid perimeter shall be free from burrs, dirt, and other foreign debris that would prevent solid seating. Bolts and nuts shall be liberally coated with anti-seize compound. Bolts shall be installed snug tight. The bearing seat and lid perimeter shall be machined to allow a minimum of 75 percent of the bearing areas to be seated with a tolerance of 0.0 to 0.005 inches measured with a feeler gage. The bearing area percentage will be measured for each side of the lid as it bears on the frame.

9-29.2(2) Standard Duty and Heavy-Duty Cable Vaults and Pull Boxes

This section's title is revised to read:

Small Cable Vaults, Standard Duty Cable Vaults, Heavy-Duty Cable Vaults, Standard Duty Pull Boxes, and Heavy-Duty Pull Boxes

In the first paragraph, the first sentence is revised to read:

Small, Standard Duty and Heavy-Duty Cable Vaults and Standard Duty and Heavy-Duty Pull Boxes shall be constructed as a concrete box and as a concrete lid.

9-29.2(2)A Standard Duty Cable Vaults and Pull Boxes

This section's title is revised to read:

Small Cable Vaults, Standard Duty Cable Vaults, and Standard Duty Pull Boxes

The first paragraph is revised to read:

Small and Standard Duty Cable Vaults and Standard Duty Pull boxes shall be concrete and have a minimum load rating of 22,500 pounds and be tested in accordance with Section 9-29.2(1)C for concrete Standard Duty Junction Boxes.

In the second paragraph, the first sentence is revised to read:

Concrete for Small and Standard Duty Cable Vaults and Standard Duty Pull Boxes shall have a minimum compressive strength of 4,000 psi.

In the third paragraph, the first sentence is revised to read:

All Small and Standard Duty Cable Vaults and Standard Duty Pull Boxes placed in sidewalks, walkways, and shared-use paths shall have slip-resistant surfaces.

The fourth paragraph (up until the colon) is revised to read:

Materials for Small and Standard Duty Cable Vaults and Standard Duty Pull Boxes shall conform to the following:

9-29.3 Fiber Optic Cable, Electrical Conductors, and Cable

The following new subsection is added:

9-29.3(3) Wire Marking Sleeves

Wire marking sleeves shall be full-circle in design, non-adhesive, printable using an indelible ink and shall fit snugly on the wire or cable. Marking sleeves shall be made from a PVC or polyolefin, and provide permanent identification for wires and cables.

9-31.AP9

Section 9-31, Elastomeric Bearing Pads
August 4, 2014

This section's title is revised to read:

Elastomeric Pads

9-31.1 Requirements

In the first paragraph, the word "bearing" is deleted from the first sentence.

In the first sentence of the second paragraph, the word "bearing" is deleted and replaced with "elastomeric".

In the last sentence of the second paragraph, the word “Bearing” is deleted and replaced with “Elastomeric”.

In the third paragraph, the word “bearing” is deleted and replaced with the word “elastomeric”.

9-32.AP9

Section 9-32, Mailbox Support
August 4, 2014

9-32.7 Type 2 Mailbox Support
The first sentence is revised to read:

> Type 2 mailbox supports shall be 2-inch 14-gage steel tube and shall meet the NCHRP 350 or the Manual for Assessing Safety Hardware (MASH) crash test criteria.

9-34.AP9

Section 9-34, Pavement Marking Material
August 4, 2014

9-34.2 Paint
The second paragraph is revised to read:

> Blue and black paint shall comply with the requirements of yellow paint in Section 9-34.2(4) and Section 9-34.2(5), with the exception that blue and black paints do not need to meet the requirements for titanium dioxide, directional reflectance, and contrast ratio.

9-34.5 Temporary Pavement Marking Tape
This section is revised to read:

> Biodegradable tape with paper backing is not allowed.

This section is supplemented with the following new sub-sections:

> **9-34.5(1) Temporary Pavement Marking Tape – Short Duration**
> Temporary pavement marking tape for short duration shall conform to ASTM D4592 Type II except that black tape, black mask tape and the black portion of the contrast removable tape, shall be non-reflective.
>
> **9-34.5(2) Temporary Pavement Marking Tape – Long Duration**
> Temporary pavement marking tape for long duration shall conform to ASTM D4592 Type I. Temporary pavement marking tape for long duration, except for black tape, shall have a minimum initial coefficient of retroreflective luminance of 200 $mcd*m^{-2}*lx^{-1}$ when measured in accordance with ASTM E 2832 or ASTM E 2177. Black tape, black mask tape and the black portion of the contrast removable tape, shall be non-reflective.

9-34.6 Temporary Raised Pavement Markers
This section’s title is revised to read:

Temporary Flexible Raised Pavement Markers

The second paragraph is deleted.

9-35.AP9

Section 9-35, Temporary Traffic Control Materials
August 4, 2014

9-35.0 General Requirements
The following item is deleted from the list of temporary traffic control materials:

Barrier Drums

The last sentence of the second paragraph is revised to read:

Certification for crashworthiness according to NCHRP 350 or the Manual for Assessing Safety Hardware (MASH) will be required as described in Section 1-10.2(3).

9-35.2 Construction Signs
The first sentence is revised to read:

Construction signs shall conform to the requirements of the MUTCD and shall meet the requirements of NCHRP Report 350 for Category 2 devices or MASH.

9-35.7 Traffic Safety Drums
The third paragraph is revised to read:

Drums and light units shall meet the crashworthiness requirements of NCHRP 350 or MASH as described in Section 1-10.2(3).

9-35.8 Barrier Drums
This section including title is deleted in its entirety and replaced with the following:

9-35.8 Vacant

9-35.12 Transportable Attenuator
In the first paragraph, the fourth sentence is revised to read:

The Contractor shall provide certification that the transportable attenuator complies with NCHRP 350 Test level 3 or MASH Test Level 3 requirements.

9-35.13 Tall Channelizing Devices
In the sixth paragraph, the last sentence is revised to read:

The method of attachment must ensure that the light does not separate from the device upon impact and light units shall meet the crashworthiness requirements of NCHRP 350 or MASH as described in Section 1-10.2(3).

PART III

SPECIAL PROVISIONS

Table of Contents

INTRODUCTION 1

DESCRIPTION OF WORK 2

1-01 DEFINITIONS AND TERMS 3

1-01.3 Definitions 3

1-02 BID PROCEDURES AND CONDITIONS 6

1-02.1 Prequalification of Bidders 6
1-02.1 Qualifications of Bidder 6
1-02.1(1) Supplemental Qualifications Criteria 6
1-02.2 Plans and Specifications 6
1-02.5 Proposal Forms 7
1-02.6 Preparation of Proposal 7
1-02.7 Bid Deposit 8
1-02.9 Delivery of Proposal 8
1-02.10 Withdrawing, Revising, or Supplementing Proposal 8
1-02.13 Irregular Proposals 9
1-02.14 Disqualification of bidders 9
1-02.15 Pre Award Information 10

1-03 AWARD AND EXECUTION OF CONTRACT 12

1-03.1 Consideration of Bids 12
1-03.2 Award of Contract 12
1-03.3 Execution of Contract 12
1-03.4 Contract Bond 13
1-03.4(1) Retainage in Lieu of Contract Bond 13
1-03.5 Failure to Execute Contract 14

1-04 SCOPE OF THE WORK 15

1-04.2 Coordination of Contract Documents, Plans, Special Provisions, Specifications, and Addenda 15

1-05 CONTROL OF WORK 16

1-05.3 Plans and Working Drawings 16
1-05.3 Submittals 16
1-05.3(1) Submittal Schedule 16
1-05.3(2) Submittal Procedures 16
1-05.3(3) Engineer’s Review of Submittals 17
1-05.3(4) Resubmittals 18
1-05.3(5) Submittal Requirements by Section 18
1-05.4 Conformity With and Deviations from Plans and Stakes 19
1-05.4(1) Roadway and Utility Surveys 19

1-05.4(2) Bridge and Structure Surveys 19
1-05.7 Removal of Defective and Unauthorized Work 20
1-05.11 Final Inspection 20
1-05.11 Final Inspections and Operational Testing 20
1-05.11(1) Substantial Completion Date 20
1-05.11(2) Final Inspection and Physical Completion Date 21
1-05.11(3) Operational Testing 21
1-05.13 Superintendents, Labor and Equipment of Contractor 22
1-05.15 Method of Serving Notices 22
1-05.16 Water and Power 22
1-05.17 Oral Agreements 23
1-06 CONTROL OF MATERIAL 25
1-06.1 Approval of Materials Prior To Use 25
1-06.1(1) Qualified Products List (QPL) 25
1-06.1(2) Request for Approval of Material (RAM) 25
1-06.1(4) Fabrication Inspection Expense 25
1-07 LEGAL RELATIONS AND RESPONSIBILITIES TO THE PUBLIC 26
1-07.1 Laws to be Observed 26
1-07.2 State Taxes 26
1-07.2 State Tax 26
1-07.2(1) State Sales Tax — Rule 171 27
1-07.2(2) State Sales Tax — Rule 170 27
1-07.2(3) Services 27
1-07.9 Wages 28
1-07.9(5) Required Documents 28
1-07.9(5) Required Documents 28
1-07.15 Temporary Water Pollution/Erosion Control 29
1-07.15(1) Spill Prevention, Control and Countermeasures Plan 29
1-07.16 Protection and Restoration of Property 33
1-07.16(1) Private/Public Property 33
1-07.17 Utilities and Similar Facilities 33
1-07.18 Public Liability and Property Damage Insurance 34
1-07.18 Insurance 34
1-07.18(1) General Requirements 34
1-07.18(2) Additional Insured 35
1-07.18(3) Subcontractors 35
1-07.18(4) Evidence of Insurance 36
1-07.18(5) Coverages and Limits 36
1-07.18(5)A Commercial General Liability 36
1-07.23 Public Convenience and Safety 37

1-07.23(1) Construction under Traffic 37
1-07.23(2) Construction and Maintenance of Detours 38
1-07.24 Rights of Way 42
1-08 PROSECUTION AND PROGRESS 44
1-08.0 Preliminary Matters 44
1-08.0(1) Preconstruction Conference 44
1-08.0(2) Hours of Work 44
1-08.0(3) Reimbursement for Overtime Work of Contracting Agency Employees 45
1-08.1 Subcontracting - D/M/WBE Reporting 45
1-08.4 Notice to Proceed and Prosecution of the Work 46
1-08.5 Time for Completion 46
1-08.7 Maintenance During Suspension 47
1-08.9 Liquidated Damages 47
1-09 MEASUREMENT AND PAYMENT 48
1-09.6 Force Account 48
1-09.7 Mobilization 48
1-09.9 Payments 48
1-09.9(1) Retainage 49
1-09.13(3)A Administration of Arbitration 50
1-10 TEMPORARY TRAFFIC CONTROL 51
1-10.1(2) Description 51
1-10.2(1) General 51
1-10.3(2)F Signalized Intersections 51
1-10.3(3)A Construction Signs 52
1-10.3(3)C Portable Changeable Message Sign 52
2-01 CLEARING, GRUBBING, AND ROADSIDE CLEANUP 53
2-01.1 Description 53
2-01.2 Disposal of Usable Material and Debris 53
2-01.3(1) Clearing 53
2-01.3(2) Grubbing 53
2-03 ROADWAY EXCAVATION AND EMBANKMENT 54
2-03.3(5) Slope Treatment 54
2-03.5 Payment 54
2-07 WATERING 55
2-07.3 Construction Requirements 55
2-07.3(1) Water Supplied from Hydrants 55
2-09 STRUCTURE EXCAVATION 56
2-09.4 Measurement 56

2-09.5 Payment 56
2-13 VEGETATION REMOVAL 57
2-13.1 Description 57
2-13.2 Definition of Vegetation 57
2-13.3 Construction Requirements 57
2-13.4 Measurement 57
2-13.5 Payment 58
2-14 PAVEMENT REMOVAL 59
2-14.1 Description 59
2-14.2 Pavement Classification 59
2-14.3 Construction Requirements 60
2-14.4 Measurement 60
2-14.5 Payment 60
2-15 CURB AND CURB AND GUTTER REMOVAL 61
2-15.1 Description 61
2-15.2 Curb Classification 61
2-15.3 Construction Requirements 61
2-15.4 Measurement 61
2-15.5 Payment 61
2-16 REMOVAL OF CATCH BASINS, MANHOLES, CURB INLETS, ETC. 63
2-16.1 Description 63
2-16.2 Vacant 63
2-16.3 Construction Requirements 63
2-16.4 Measurement 63
2-16.5 Payment 63
3-04 Acceptance of Aggregate 64
3-04.1 Description 64
3-04.3(1) General 64
3-04.3(4) Testing Results 64
3-04.3(6) Statistical Evaluation 64
3-04.5 Payment 64
4-04 Ballast and crushed surfacing 65
4-04.2 Materials 65
4-04.4 Measurement 65
4-04.5 Payment 65
5-02 BITUMINOUS SURFACE TREATMENT 66
5-02.5 Payment 66
5-04 HOT MIX ASPHALT 67

5-04.2 Material 67
5-04.3 Construction Requirements 67
5-04.3(3) Hot Mix Asphalt Pavers 67
5-04.3(3)A Material Transfer Device/Vehicle 67
5-04.3(5)E Pavement Repair 67
5-04.3(7)A1 General 68
5-04.3(7)A2 Statistical or Nonstatistical Evaluation 68
5-04.3(8)A Acceptance Sampling and Testing – HMA Mixture 68
5-04.3(8)A1 General 68
5-04.3(10) Compaction 68
5-04.3(10)B1 General 68
5-04.3(10)B2 Cyclic Density 69
5-04.3(10)B4 Test Results 69
5-04.3(17) Paving Under Traffic 69
5-04.5 Payment 69
5-04.5(1) Quality Assurance Price Adjustments 70
6-02 Concrete Structures 71
6-02.2 Materials 71
6-02.3 Construction Requirements 71
6-02.3(2)B Commercial Concrete 71
6-02.3(4) Ready-Mix Concrete 71
6-02.4 Measurement 71
6-02.5 Payment 71
7-02 CULVERTS 72
7-02.2 Materials 72
7-04 STORM SEWERS 73
7-05 MANHOLES, INLETS, CATCH BASINS, AND DRYWELLS 74
7-05.1 Description 74
7-05.3 Construction Requirements 74
7-05.3(1) Adjusting Manholes and Catch Basins to Grade 74
7-05.3(1) Adjusting Utility Structures to Grade 74
7-05.3(3) Connections to Existing Manholes 74
7-05.4 Measurement 74
7-05.5 Payment 75
7-07 CLEANING EXISTING DRAINAGE STRUCTURES 77
7-07.3 Construction Requirements 77
7-08 GENERAL PIPE INSTALLATION REQUIREMENTS 78
7-08.3 Construction Requirements 78
7-08.3(1)A Trenches 78

7-08.3(1)C Bedding the Pipe 78
7-08.3(2)F Plugs and Connections 78
7-08.3(2)G Jointing of Dissimilar Pipe 78
7-08.3(3) Backfilling 78
7-08.5 Payment 79
7-15 SERVICE CONNECTIONS 80
7-15.3 Construction Requirements 80
7-15.3(2) Adjusting Meter Boxes to Grade 80
7-15.4 Measurement 80
7-15.5 Payment 80
7-17 SANITARY SEWERS 81
7-17.1 Description 81
7-17.2 Materials 81
7-17.3(2)A General 81
7-17.3(2)H Television Inspection 81
7-17.4 Measurement 81
7-17.5 Payment 82
8-01 EROSION CONTROL AND WATER POLLUTION CONTROL 83
8-01.1 Description 83
8-01.3 Construction Requirements 83
8-01.3(1)A Submittals 83
8-01.3(1)B Erosion and Sediment Control (ESC) Lead 83
8-01.3(1)C Water Management 84
8-01.3(7) Stabilized Construction Entrance 87
8-01.3(8) Street Cleaning 87
8-01.3(9)C Straw Bale Barrier 87
8-01.3(10) Wattles 87
8-01.4 Measurement 87
8-01.5 Payment 88
8-02 ROADSIDE RESTORATION 89
8-02.3 Construction Requirements 89
8-02.3(5) Planting Area Preparation 90
8-02.3(6) Soil Amendments 90
8-02.3(9) Pruning, Staking, Guying and Wrapping 90
8-02.3(10) Fertilizers 90
8-02.3(11) Bark or Wood Chip Mulch 91
8-02.3(13) Plant Establishment 91
8-02.3(14) Plant Replacement 92
8-02.3(16) Lawn Installation 92
8-02.3(16)A Lawn Installation 92

8-02.3(16)B Lawn Establishment 93
8-02.4 Measurement 93
8-02.5 Payment 93
8-03 IRRIGATION SYSTEM 94
8-03.3 Construction Requirements 94
8-03.3(5) Installation 94
8-04 CURBS, GUTTERS, AND SPILLWAYS 95
8-04.1 Description 95
8-04.2 Materials 95
8-04.3 Construction Requirements 95
8-04.3(1) Cement Concrete Curbs, Gutters, and Spillways 95
8-04.3(1)B Integral Cement Concrete Curb 95
8-04.3(6) Cold Weather Work 95
8-04.3(7) Precast Concrete Wheel Stops 96
8-04.4 Measurement 96
8-04.5 Payment 96
8-12 Chain Link Fence and Wire Fence 97
8-12.3 Construction Requirements 97
8-12.3(1) Chain Link Fence and Gates 97
8-12.3(1)B Top Rail 97
8-12.5 Payment 97
8-14 CEMENT CONCRETE SIDEWALKS 98
8-14.3 Construction Requirements 98
8-14.3(3) Placing and Finishing Concrete 98
8-14.3(4) Curing 98
8-14.3(20) Cold Weather Work 98
8-14.3(21) Thickened Edge for Sidewalk 98
8-14.5 Payment 98
8-20 ILLUMINATION, TRAFFIC SIGNAL SYSTEMS, AND ELECTRICAL 99
8-20.1 Description 99
8-20.2 Materials 99
8-20.2(1) Equipment List and Drawings 99
8-20.3 Construction Requirements 99
8-20.3(1) General 99
8-20.3(4) Foundations 100
8-20.3(5) Conduit 101
8-20.3(6) Junction Boxes, Cable Vaults, and Pull boxes 102
8-20.3(7) Messenger Cable, Fittings 102
8-20.3(8) Wiring 102

8-20.3(10) Service, Transformer, and Intelligent Transportation System (ITS) Cabinets 103
8-20.3(13) Illumination Systems 103
8-20.3(13)A Light Standards 103
8-20.3(14) Signal Systems 104
8-20.3(14)A Signal Controllers 104
8-20.3(14)B Signal Heads 105
8-20.3(14)C Induction Loop Vehicle Detectors 105
8-20.3(17)B “As Built” Plans 105
8-20.4 Measurement 105
8-20.5 Payment 105
8-22 PAVEMENT MARKING 107
8-22.1 Description 107
8-22.3 Construction Requirements 107
8-22.3(3) Marking Application 107
8-22.3(3)A Marking Colors 107
8-22.3(4) Tolerances for Lines 107
8-22.4 Measurement 107
8-22.5 Payment 108
8-30 CEMENT CONCRETE STAIRWAY AND HAND RAILING 109
8-30.1 Description 109
8-30.2 Materials 109
8-30.3 Construction Requirements 109
8-30.3(1) Excavation 109
8-30.3(2) Forms 109
8-30.3(3) Placing and Finishing of Concrete 110
8-30.3(4) Cold Weather Work 110
8-30.3(5) Curing 110
8-30.3(6) Hand Rail 110
8-30.3(6)A Hand Rail Painting 110
8-30.4 Measurement 110
8-30.5 Payment 110
9-03 AGGREGATES 112
9-03.1 Aggregates for Portland Cement Concrete 112
9-03.1(1) General Requirements 112
9-03.12 Gravel Backfill 112
9-03.12(3) Gravel Backfill for Pipe Zone Bedding 112
9-03.21 Recycled Material 112
9-03.21(1) General Requirements 112
9-07 REINFORCING STEEL 113

9-07.5(2) Corrosion Resistant Dowel Bars (For Cement Concrete Pavement) 113
9-08 PAINTS AND RELATED MATERIALS 114
9-08-20 Painting Surfaces Systems 114
9-08-20(1) Steel 114
9-08-20(2) Concrete 114
9-08-20(3) Wood 114
9-28 Signing Materials and Fabrication 115
9-29 ILLUMINATION, SIGNALS, ELECTRICAL 116
9-29.1(6) Detectable Underground Warning Tape 116
9-29.2 Junction Boxes, Cable Vaults and Pull Boxes 116
9-29.3 Conductors, Cable 116
9-29.3(2)F Detector Loop Wire 117
9-29.4 Messenger Cable, Fittings 117
9-29.6 Light and Signal Standards 118
9-29.6(3) Timber Light Standards, Timber Strain Poles, Timber Service Supports 118
9-29.10 Luminaires 118
9-29.10(1) Conventional Roadway Luminaires 118
9-29.11 Control Equipment 119
9-29.11(2) Photoelectric Controls 119
9-29.12 Electrical Splice Materials 119
9-29.12(1) Illumination Circuit Splices 119
9-29.12(2) Traffic Signal Splice Materials 119
9-29.13 Traffic Signal Controllers 119
9-29.14 Traffic Signal Strain Poles, Mast Arms and Pedestals 119
9-29.15 Flashing Beacon Control 123
9-29.16 Vehicular Signal Heads, Displays, and Housing 123
9-29.16(2)B Signal Housing 123
9-29.16(3) Polycarbonate Traffic Signal Heads 124
9-29.17 Signal Head Mounting Brackets and Fittings 124
9-29.18 Vehicle Detector 124
9-29.19 Pedestrian Push Buttons 125
9-29.20 Pedestrian Signals 125
9-29.24 Service Cabinets 125
9-29.24(2) Electrical Circuit Breakers and Contactors 125

INTRODUCTION
(April 1, 2012 Tacoma GSP)

The following special provisions shall be used in conjunction with the "2014 Standard Specifications for Road, Bridge and Municipal Construction" and "Standard Plans for Road, Bridge, and Municipal Construction" as prepared by the Washington State Department of Transportation (WSDOT). State Standard Specifications are available through WSDOT, by calling (360) 705-7430, or may be downloaded, free of charge, from this location on the WSDOT home page:
www.wsdot.wa.gov/fasc/engineeringpublications/library.htm

These Special Provisions are made up of both General Special Provisions (GSPs) from various sources, which may have project-specific fill-ins; and project-specific Special Provisions. Each Provision either supplements, modifies, or replaces the comparable Standard Specification, or is a new Provision. The deletion, amendment, alteration, or addition to any subsection or portion of the Standard Specifications is meant to pertain only to that particular portion of the section, and in no way should it be interpreted that the balance of the section does not apply.

The GSPs are labeled under the headers of each GSP, with the date of the GSP and its source, as follows:

(May 18, 2007 APWA GSP)
(August 7, 2006 WSDOT GSP)
(April 2, 2007 Tacoma GSP)

The project specific Special Provisions are labeled under the headers of each Special Provision as follows:

(******)

For further information relating to these Specifications please contact:

Prior to Contract Award: Mark D'Andrea, Public Works Department, Engineering Division, mdandrea@cityoftacoma.org, (253) 591-5518;

After Contract Award: Mark Henry, Public Works Department, Engineering Division, (253) 591-5771.

There will be no pre-bid conference for this project. If you have questions about the work, please contact Mark D'Andrea at the email/phone above, or if you have questions about the SBE program, please call the SBE office at 253-591-5224 or 253-573-2435.

DESCRIPTION OF WORK
(******)

This contract shall generally consist of ADA improvements at 4 sites, which include traffic control; pavement removal; clearing and grubbing; pavement, curb, gutter, and sidewalk replacement; signage; striping; and other work; all in accordance with the attached Contract Plans, these Contract Provisions, and the Standard Plans.

END OF SECTION

1-01 DEFINITIONS AND TERMS

1-01.3 Definitions

This Section is supplemented with the following:

(September 12, 2008 APWA GSP)

All references in the Standard Specifications to the terms “State”, “Department of Transportation”, “Washington State Transportation Commission”, “Commission”, “Secretary of Transportation”, “Secretary”, “Headquarters”, and “State Treasurer” shall be revised to read “Contracting Agency”.

All references to “State Materials Laboratory” shall be revised to read “Contracting Agency designated location”.

The venue of all causes of action arising from the advertisement, award, execution, and performance of the contract shall be in the Superior Court of the County where the Contracting Agency’s headquarters are located.

Additive
A supplemental unit of work or group of bid items, identified separately in the proposal, which may, at the discretion of the Contracting Agency, be awarded in addition to the base bid.

Alternate
One of two or more units of work or groups of bid items, identified separately in the proposal, from which the Contracting Agency may make a choice between different methods or material of construction for performing the same work.

Contract Documents
See definition for “Contract”.

Contract Time
The period of time established by the terms and conditions of the contract within which the work must be physically completed.

Dates

Bid Opening Date
The date on which the Contracting Agency publicly opens and reads the bids.

Award Date
The date of the formal decision of the Contracting Agency to accept the lowest responsible and responsive bidder for the work.

Contract Execution Date
The date the Contracting Agency officially binds the agency to the contract.

Notice to Proceed Date
The date stated in the Notice to Proceed on which the contract time begins.

Substantial Completion Date
The day the Engineer determines the Contracting Agency has full and unrestricted use and benefit of the facilities, both from the operational and safety standpoint, and only minor incidental work, replacement of temporary substitute facilities, or correction or repair remains for the physical completion of the total contract.

Physical Completion Date
The day all of the work is physically completed on the project. All documentation required by the contract and required by law does not necessarily need to be furnished by the Contractor by this date.

Completion Date
The day all the work specified in the contract is completed and all the obligations of the Contractor under the contract are fulfilled by the Contractor. All documentation required by the contract and required by law must be furnished by the Contractor before establishment of this date.

Final Acceptance Date
The date on which the Contracting Agency accepts the work as complete.

Notice of Award
The written notice from the Contracting Agency to the successful bidder signifying the Contracting Agency's acceptance of the bid.

Notice to Proceed
The written notice from the Contracting Agency or Engineer to the Contractor authorizing and directing the Contractor to proceed with the work and establishing the date on which the contract time begins.

Traffic
Both vehicular and non-vehicular traffic, such as pedestrians, bicyclists, wheelchairs, and equestrian traffic.

This section is supplemented with the following:
(******)

All references to the acronym D/M/WBE" shall be revised to read "SBE".
All references in the Standard Specifications to the term "Contract Bond" shall be revised to read "Performance Bond."

All references in the Standard Specifications to the term "Proposal Bond" shall be revised to read "Bid Bond."

Base Bid
The summation of Bid Item amounts (extensions) in the Bid Forms, excluding Additives, Alternates, Deductives, Force Accounts, and taxes collected separately pursuant to Section 1-07.2.

Change Order
A written order to the Contractor, issued by the Contracting Agency after execution of the contract, authorizing an addition, deletion, or other revision in the Work, within the scope of the Contract Documents, and establishing the basis of payment and time adjustments, if any, for the Work affected by the change.

Day
Unless otherwise specified, a calendar day.

Calendar Day
The time period of 24 hours measured from midnight to the next midnight, including weekends and holidays.

Deductive
A supplemental unit of work or group of Bid Items, identified separately in the Bid, which may, at the discretion of the Contract Agency, be deducted from the Base Bid should the Contract Agency choose not to Award the total Base Bid.

Grand Total Price
The Grand Total Price of the Contract will include the Base Bid, Additives, Alternates, Deductives, Force Accounts, and taxes collected separately pursuant to Section 1-07.2.

Standard Specifications
Divisions One through Nine of the specified edition of the WSDOT “Standard Specifications for Road, Bridge, and Municipal Construction.”

END OF SECTION

1-02 BID PROCEDURES AND CONDITIONS

1-02.1 Prequalification of Bidders

Delete this Section and replace it with the following:

1-02.1 Qualifications of Bidder
(January 24, 2011 APWA GSP)

Before award of a public works contract, a bidder must meet at least the minimum qualifications of RCW 39.04.350(1) to be considered a responsible bidder and qualified to be awarded a public works project.

Add the following new section:

1-02.1(1) Supplemental Qualifications Criteria
(March 25, 2009 APWA GSP)

In addition, the Contracting Agency has established Contracting Agency-specific and/or project-specific supplemental criteria, in accordance with RCW 39.04.350(2), for determining Bidder responsibility, including the basis for evaluation and the deadline for appealing a determination that a Bidder is not responsible. These criteria are contained in the Statement of Qualification Form to be submitted with the bid.

1-02.2 Plans and Specifications
(June 27, 2011 APWA GSP)

Delete this Section and replace it with the following:

Information as to where Bid Documents can be obtained or reviewed can be found in the Call for Bids (Advertisement for Bids) for the work.

After award of the contract, plans and specifications will be issued to the Contractor at no cost as detailed below:

To Prime Contractor	No. of Sets	Basis of Distribution
Reduced plans (11" x 17")	6	Furnished automatically upon award.
Contract Provisions	6	Furnished automatically upon award.
Large plans (e.g., 22" x 34")	2	Furnished only upon request.

Additional plans and Contract Provisions may be obtained by the Contractor from the source stated in the Call for Bids, at the Contractor's own expense.

1-02.5 Proposal Forms
(June 27, 2011 APWA GSP)
Delete this Section and replace it with the following:

The Proposal Form will identify the project and its location and describe the work. It will also list estimated quantities, units of measurement, the items of work, and the materials to be furnished at the unit bid prices. The bidder shall complete spaces on the proposal form that call for, but are not limited to, unit prices; extensions; summations; the total bid amount; signatures; date; and, where applicable, retail sales taxes and acknowledgment of addenda; the bidder's name, address, telephone number, and signature; the bidder's D/M/WBE commitment, if applicable; a State of Washington Contractor's Registration Number; and a Business License Number, if applicable. Bids shall be completed by typing or shall be printed in ink by hand, preferably in black ink. The required certifications are included as part of the Proposal Form.

The Contracting Agency reserves the right to arrange the proposal forms with alternates and additives, if such be to the advantage of the Contracting Agency. The bidder shall bid on all alternates and additives set forth in the Proposal Form unless otherwise specified.

1-02.6 Preparation of Proposal
The second paragraph is supplemented with the following:
(June 27, 2011 APWA GSP)

4. If a minimum bid amount has been established for any item, the unit or lump sum price must equal or exceed the minimum amount stated.

5. Any correction to a bid made by interlineations, alteration, or erasure, shall be initialed by the signer of the bid.

The last paragraph is revised to read:

The Bidder shall make no stipulation on the Bid Form, nor qualify the bid in any manner.

A bid by a corporation shall be executed in the corporate name, by the president or a vice president (or other corporate officer accompanied by evidence of authority to sign).

A bid by a partnership shall be executed in the partnership name, and signed by a partner. A copy of the partnership agreement shall be submitted with the Bid Form if any D/M/WBE requirements are to be satisfied through such an agreement.

A bid by a joint venture shall be executed in the joint venture name and signed by a member of the joint venture. A copy of the joint venture agreement shall be submitted with the Bid Form if any D/W/MBE requirements are to be satisfied through such an agreement.

The fourth paragraph is revised to read:
(August 1, 2007 Tacoma GSP)

The bidder shall submit the following completed forms:
City of Tacoma – SBE Utilization Form
City of Tacoma – Prime Contractor Pre-Work Form

1-02.7 Bid Deposit
(April 1, 2012 Tacoma GSP)
Delete this Section and replace it with the following:

A deposit of at least 5 percent of the total Bid shall accompany each Bid. This deposit may be cash, certified check, cashier's check, or a proposal bond (Surety bond). Any proposal bond shall be on a form acceptable to the Contracting Agency and shall be signed by the Bidder and the Surety. A proposal bond shall not be conditioned in any way to modify the minimum 5 percent required. The Surety shall: (1) be registered with the Washington State Insurance Commissioner, and (2) appear on the current Authorized Insurance List in the State of Washington published by the Office of the Insurance Commissioner.

The failure to furnish a Bid deposit of a minimum of 5 percent shall make the Bid nonresponsive and shall cause the Bid to be rejected by the Contracting Agency.

If a Bid Bond is furnished, the form furnished by the Contracting Agency must be followed. No variations from the language thereof will be accepted.

1-02.9 Delivery of Proposal
(January 24, 2011 APWA GSP)
Delete this Section and replace it with the following:

Each proposal shall be submitted in a sealed envelope, with the Project Name and Project Number as stated in the Advertisement for Bids clearly marked on the outside of the envelope, or as otherwise required in the Bid Documents, to ensure proper handling and delivery.

The Contracting Agency will not consider Proposals it receives after the time fixed for opening Bids in the call for Bids.

1-02.10 Withdrawing, Revising, or Supplementing Proposal
(April 1, 2012 Tacoma GSP)
Delete this Section and replace it with the following:

After submitting a Bid Proposal to the Contracting Agency, the Bidder may withdraw, revise, or supplement it if:
1. The Bidder submits a written request signed by an authorized person, and
2. The Contracting Agency receives the request before the time set for receipt of Proposals.

The original Bid Proposal may be supplemented, or revised and resubmitted as the official Bid Proposal if the Contracting Agency receives it before the time set for receipt of Proposals.

1-02.13 Irregular Proposals
(September 29, 2009 Tacoma GSP)

Revise item 1 to read:

1. A proposal will be considered irregular and will be rejected if:
   a. The Bidder is not prequalified <u>when so required</u>;
   b. The authorized proposal form furnished by the Contracting Agency is not used or is altered;
   c. The completed proposal form contains any unauthorized additions, deletions, alternate Bids, or conditions;
   d. The Bidder adds provisions reserving the right to reject or accept the award, or enter into the Contract;
   e. A price per unit cannot be determined from the Bid Proposal;
   f. The Proposal form is not properly executed;
   g. The Bidder fails to submit or properly complete a Subcontractor list, if applicable, as required in Section 1-02.6;
   h. The bidder fails to submit or properly complete the "City of Tacoma – HUB Utilization Form" and "City of Tacoma – Prime Contractor Pre-Work Form" as required in Section 1-02.6;
   i. The Bid Proposal does not constitute a definite and unqualified offer to meet the material terms of the Bid invitation; or
   j. <u>More than one proposal is submitted for the same project from a Bidder under the same or different names.</u>

1-02.14 Disqualification of bidders
(September 29, 2009 Tacoma GSP)

A Bidder will be deemed not responsible if:

1. the Bidder does not meet the mandatory bidder responsibility criteria in RCW 39.04.350(1), as amended; or
2. evidence of collusion exists with any other Bidder or potential Bidder. Participants in collusion will be restricted from submitting further bids; or
3. the Bidder, in the opinion of the Contracting Agency, is not qualified for the work or to the full extent of the bid, or to the extent that the bid exceeds the authorized prequalification amount as may have been determined by a prequalification of the Bidder; or
4. an unsatisfactory performance record exists based on past or current Contracting Agency work or for work done for others, as judged from the standpoint of conduct of the work; workmanship; or progress; affirmative action; equal employment opportunity practices; termination for cause; or Disadvantaged Business Enterprise, Minority Business Enterprise, or Women's Business Enterprise utilization; or
5. there is uncompleted work (Contracting Agency or otherwise) which in the opinion of the Contracting Agency might hinder or prevent the prompt completion of the work bid upon; or
6. the Bidder failed to settle bills for labor or materials on past or current contracts, unless there are extenuating circumstances acceptable to the Contracting Agency; or

7. the Bidder has failed to complete a written public contract or has been convicted of a crime arising from a previous public contract, unless there are extenuating circumstances acceptable to the Contracting Agency; or
8. the Bidder is unable, financially or otherwise, to perform the work, in the opinion of the Contracting Agency; or
9. there are any other reasons deemed proper by the Contracting Agency; or
10. the Bidder fails to meet the Project-specific supplemental bidder responsibility criteria listed in the Statement of Qualifications, ADA Pedestrian Improvements –Phase 2-, Installer – Concrete Flatwork and Curbing; or
11. The bidder fails to meet the HUB requirements as described in Section 1-02.6.

As evidence that the Bidder meets the bidder responsibility criteria above, the apparent two lowest Bidders must submit to the Contracting Agency within 24 hours of the bid submittal deadline, documentation (sufficient in the sole judgment of the Contracting Agency) demonstrating compliance with all applicable responsibility criteria, including all documentation specifically listed in the supplemental criteria. The Contracting Agency reserves the right to request such documentation from other Bidders as well, and to request further documentation as needed to assess bidder responsibility.

The basis for evaluation of Bidder compliance with these supplemental criteria shall be any documents or facts obtained by Contracting Agency (whether from the Bidder or third parties) which any reasonable owner would rely on for determining such compliance, including but not limited to: (i) financial, historical, or operational data from the Bidder; (ii) information obtained directly by the Contracting Agency from owners for whom the Bidder has worked, or other public agencies or private enterprises; and (iii) any additional information obtained by the Contracting Agency which is believed to be relevant to the matter.

If the Contracting Agency determines the Bidder does not meet the bidder responsibility criteria above and is therefore not a responsible Bidder, the Contracting Agency shall notify the Bidder in writing, with the reasons for its determination. If the Bidder disagrees with this determination, it may appeal the determination within 24 hours of receipt of the Contracting Agency's determination by presenting its appeal to the Contracting Agency. The Contracting Agency will consider the appeal before issuing its final determination. If the final determination affirms that the Bidder is not responsible, the Contracting Agency will not execute a contract with any other Bidder until at least two business days after the Bidder determined to be not responsible has received the final determination.

1-02.15 Pre Award Information
(October 1, 2005 APWA GSP)
Revise this section to read:

Before awarding any contract, the Contracting Agency may require one or more of these items or actions of the apparent lowest responsible bidder:
1. A complete statement of the origin, composition, and manufacture of any or all materials to be used,
2. Samples of these materials for quality and fitness tests,

3. A progress schedule (in a form the Contracting Agency requires) showing the order of and time required for the various phases of the work,
4. A breakdown of costs assigned to any bid item,
5. Attendance at a conference with the Engineer or representatives of the Engineer,
6. Obtain, and furnish a copy of, a business license to do business in the city or county where the work is located.
7. A copy of State of Washington Contractor's Registration, or
8. Any other information or action taken that is deemed necessary to ensure that the bidder is the lowest responsible bidder.

END OF SECTION

1-03 AWARD AND EXECUTION OF CONTRACT

1-03.1 Consideration of Bids
(January 23, 2006 APWA GSP)

Revise the first paragraph to read:

After opening and reading proposals, the Contracting Agency will check them for correctness of extensions of the prices per unit and the total price. If a discrepancy exists between the price per unit and the extended amount of any bid item, the price per unit will control. If a minimum bid amount has been established for any item and the bidder's unit or lump sum price is less than the minimum specified amount, the Contracting Agency will unilaterally revise the unit or lump sum price, to the minimum specified amount and recalculate the extension. The total of extensions, corrected where necessary, including sales taxes where applicable and such additives and/or alternates as selected by the Contracting Agency, will be used by the Contracting Agency for award purposes and to fix the Awarded Contract Price amount and the amount of the contract bond.

1-03.2 Award of Contract
(March 27, 2003 Tacoma GSP)

All references to 45 calendar days shall be revised to read 60 calendar days.

1-03.3 Execution of Contract
(October 1, 2005 APWA GSP)

Revise this section to read:

Copies of the Contract Provisions, including the unsigned Form of Contract, will be available for signature by the successful bidder on the first business day following award. The number of copies to be executed by the Contractor will be determined by the Contracting Agency.

Within 10 calendar days after the award date, the successful bidder shall return the signed Contracting Agency-prepared contract, an insurance certification as required by Section 1-07.18, and a satisfactory bond as required by law and Section 1-03.4. Before execution of the contract by the Contracting Agency, the successful bidder shall provide any pre-award information the Contracting Agency may require under Section 1-02.15.

Until the Contracting Agency executes a contract, no proposal shall bind the Contracting Agency nor shall any work begin within the project limits or within Contracting Agency-furnished sites. The Contractor shall bear all risks for any work begun outside such areas and for any materials ordered before the contract is executed by the Contracting Agency.

If the bidder experiences circumstances beyond their control that prevents return of the contract documents within the calendar days after the award date stated above, the Contracting Agency may grant up to a maximum of 10 additional calendar days for return of the documents, provided the Contracting Agency deems the circumstances warrant it.

1-03.4 Contract Bond
(October 1, 2005 APWA GSP)

Revise the first paragraph to read:

The successful bidder shall provide an executed contract bond for the full contract amount. This contract bond shall:

1. Be on a Contracting Agency-furnished form;
2. Be signed by an approved surety (or sureties) that:
   a. Is registered with the Washington State Insurance Commissioner, and
   b. Appears on the current Authorized Insurance List in the State of Washington published by the Office of the Insurance Commissioner,
3. Be conditioned upon the faithful performance of the contract by the Contractor within the prescribed time;
4. Guarantee that the surety shall indemnify, defend, and protect the Contracting Agency against any claim of direct or indirect loss resulting from the failure:
   a. Of the Contractor (or any of the employees, subcontractors, or lower tier subcontractors of the Contractor) to faithfully perform the contract, or
   b. Of the Contractor (or the subcontractors or lower tier subcontractors of the Contractor) to pay all laborers, mechanics, subcontractors, lower tier subcontractors, material person, or any other person who provides supplies or provisions for carrying out the work;
5. Be accompanied by a power of attorney for the Surety's officer empowered to sign the bond; and
6. Be signed by an officer of the Contractor empowered to sign official statements (sole proprietor or partner). If the Contractor is a corporation, the bond must be signed by the president or vice-president, unless accompanied by written proof of the authority of the individual signing the bond to bind the corporation (i.e., corporate resolution, power of attorney or a letter to such effect by the president or vice-president).

Add the following new sub-section:

1-03.4(1) Retainage in Lieu of Contract Bond
(October 10, 2008 APWA GSP)

For contracts of $35,000 or less, the Contractor may, at the Contractor's option, authorize the Contracting Agency to retain fifty percent (50%) of the contract amount in lieu of furnishing a performance and/or payment bond. If the Contractor elects this option, the retainage shall be held for a period of thirty (30) days after the date of final acceptance, or until receipt of all necessary releases from the Departments of Revenue and of Labor and Industries and settlement of any liens filed under RCW 60.28, whichever is later. The Contractor must advise the Contracting Agency in writing of the Contractor's election to authorize retainage in lieu of a bond, at the time of execution of the Contract.

In choosing this option, the Contractor agrees that if the Contractor, its heirs, executors, administrators, successors, or assigns, shall in all things stand to and abide by, and well and truly keep and perform the covenants, conditions and agreements in the Contract, and shall faithfully perform all the provisions of such contract and shall also well and truly perform and fulfill all the undertakings, covenants, terms, conditions and agreements of any and all duly authorized

modifications of the Contract that may hereafter be made, at the time and in the manner therein specified, and shall pay all laborers, mechanics, subcontractors, and material suppliers, and all persons who shall supply such person or persons, or subcontractors, with provisions and supplies for the carrying on of such work, on his or her part, and shall indemnify and save harmless the Contracting Agency, its officers and agents from any claim for such payment, then the funds retained in lieu of a performance bond shall be released at the time provided above; otherwise, the funds shall be retained until the Contractor fulfills the said obligations.

1-03.5 Failure to Execute Contract
(March 27, 2003 Tacoma GSP)
The first sentence is revised to read:

Failure to return the insurance certification and bond with the signed contract as required in Section 1-03.3, or failure to provide Historically Under Utilized Business (HUB) information if required in the contract, or failure or refusal to sign the contract shall result in forfeiture of the bid bond or deposit of this bidder.

END OF SECTION

1-04 SCOPE OF THE WORK

1-04.2 Coordination of Contract Documents, Plans, Special Provisions, Specifications, and Addenda

(October 1, 2005 APWA GSP)

Revise the second paragraph to read:

Any inconsistency in the parts of the contract shall be resolved by following this order of precedence (e.g., 1 presiding over 2, 2 over 3, 3 over 4, and so forth):

1. Addenda,
2. Proposal Form,
3. Special Provisions, including APWA General Special Provisions, if they are included,
4. Contract Plans,
5. Amendments to the Standard Specifications,
6. WSDOT/APWA Standard Specifications for Road, Bridge and Municipal Construction,
7. Contracting Agency's Standard Plans (if any), and
8. WSDOT/APWA Standard Plans for Road, Bridge, and Municipal Construction.

END OF SECTION

1-05 CONTROL OF WORK

1-05.3 Plans and Working Drawings (******)

This section is deleted in its entirety and replaced with the following:

1-05.3 Submittals

The Contractor shall not install materials or equipment, which require submittals, until reviewed by the Contracting Agency.

The Contractor shall submit four (4) copies to the Engineer of all submittals required by the Contract Documents (or one (1) copy electronically), unless otherwise required in these Special Provisions. This includes, but is not limited to:

- Shop Drawings/Plans
- Product Data
- Samples
- Reports
- Material Submittals (Ref. 1-06)
- Progress Schedules (Ref. 1-08.3)
- Guarantees/Warranties (Ref. 1-05.10)

The Engineer will return one (1) copy to the Contractor.

1-05.3(1) Submittal Schedule

In conformance with section 1-08.3, the progress schedule shall be submitted and reviewed prior to commencing any work.

No claim will be allowed for damages or extension of time resulting from rejection of a submittal or the requirement of resubmittals as outlined by this section.

The Engineer's review will be completed as quickly as possible, but may require up to ten (10) working days from the date the submittals or resubmittals are received until they are sent to the Contractor. If more than ten (10) working days are required for the Engineer's review of any individual submittal or resubmittal, an extension of time will be considered in accordance with Section 1-08.8.

1-05.3(2) Submittal Procedures

Contractor submittals shall be in accordance with the following:

The Contractor shall thoroughly review each submittal for dimensions, quantities, and details of the material or item shown. The Contractor shall review each submittal and note any errors, omissions, or deviations with the Contract Documents. The Contractor shall accept full responsibility for the completeness of each submittal.

Each submittal shall have a unique number assigned to it, and the transmittals shall be sequentially numbered. The numbering of resubmittals shall meet the requirements of Section 1-05.3(4). On each page, indicate the page number, and total number of pages in each submittal.

Each submittal shall indicate the intended use of the item in the work. When catalog pages are submitted, applicable items shall be clearly identified. The current revision, issue number, and data shall be indicated on all drawings and other descriptive data.

Each submittal should be transmitted with the "Submittal Transmittal Form" found at the end of this section. Upon request, an electronic copy of the Submittal Transmittal Form will be made available to the Contractor.

In lieu of utilizing the Submittal Transmittal Form, the Contractor may display the following information on each submittal, in a clear space on the front of the submittal:

- Project Name: ADA Improvements Phase 2
- Project Specification Number: PW14-0699N
- Project No. CIP-00030-04
- Submittal Date
- Description of Submittal
- Sequential, unique submittal number.
- Related Specification Section and/or plan sheet
- The following statement: "This document has been detail-checked for accuracy of content and for compliance with the contract documents. The information contained herein has been fully coordinated with all involved Subcontractors."
- Printed or typed name and signature of Contractor.

When submitting product data, the Contractor shall modify drawings to delete any information not applicable to the project and add information that is applicable to the project. The Contractor shall mark copies of printed material to clearly identify the pertinent materials, products or models.

Samples submitted shall be of sufficient size and quantity to clearly illustrate functional characteristics of product or material and full range of colors available. Field samples and mock-ups, where required, shall be erected at the project site where directed by the Engineer.

The Contractor shall notify the Engineer, in writing at time of submission, of deviations in submittals from requirements of the contract documents.

The City shall not be responsible for delays in reviewing submittals not submitted in accordance with these specifications.

1-05.3(3) Engineer's Review of Submittals

The Engineer's review of drawings and data submitted by the Contractor will cover only general conformity with the contract drawings and specifications. The Engineer's review of submittals shall not relieve the Contractor from responsibility for errors, omissions, deviations, or responsibility for compliance with the contract documents. Review of a separate item does not constitute review of an assembly in which the item functions.

When the submittal or resubmittal is marked “REVIEWED”, or “REVIEWED WITH COMMENTS”, no additional copies need to be furnished. The Contractor shall comply with any comments on the return submittal.

1-05.3(4) Resubmittals

When a submittal is marked “AMEND AND RESUBMIT” or “REJECTED, SEE REMARKS,” the Contractor shall make the corrections as noted and instructed by the Engineer and resubmit four (4) copies (or one (1) copy electronically). The Contractor shall not install material or equipment that has received a review status of “AMEND AND RESUBMIT” or REJECTED, SEE REMARKS”.

When corrected copies are resubmitted, the Contractor shall in writing direct specific attention to all revisions and shall list separately any revision made other than those called for by the Engineer on previous submittals. Resubmittals shall bear the number of the original submittal followed by a letter (A, B, etc.) to indicate the sequence of the resubmittal.

The Contractor shall revise returned submittals as required and resubmit until final review is obtained.

The Contractor shall verify that all exceptions previously noted by the Engineer have been accounted for.

1-05.3(5) Submittal Requirements by Section

The following is a summary of submittal requirements. This summary is not inclusive of all submittal requirements. The Contractor shall review each individual section in the applicable provisions or specifications, as noted below, for specific requirements.

Section	Description
1-06.1	Proposed Material Sources
1-06.1(2)	Request for Approval of Material
1-06.3	Manufacturer’s Certificate of Compliance
1-07.15	Temporary Water Pollution/Erosion Control Plan
1-07.15(1)	Spill Prevention, Control and Countermeasures (SPCC) Plan
1-07.16(1)	Property Owner Notification
1-08.3(2)	Progress Schedule
1-09.6	Equipment Rental Rates and Equipment Watch Sheets
1-09.9	Schedule Of Values
1-10.2	Traffic Control Plan
2-07.3(1)	Hydrant Permit
4-04	Crushed Surfacing Top Course
5-04	Asphalt Mix Design Certification
5-05	Concrete Mix Design
7-05	Manholes
7-05	Castings
7-05	Kor-N-Seal Connector
7-08.3(1)A	Dewatering Plan

7-08.3(1)C	Pipe Bedding
7-08.3(3)	Trench Backfill
7-08.3(6)	CDF Mix Design
7-17	Pipe materials
8-01.3(1)A	Stormwater Pollution Prevention Plan (SWPPP)

1-05.4 Conformity With and Deviations from Plans and Stakes

Add the following two new sub-sections:

1-05.4(1) Roadway and Utility Surveys
(******)

Any surveying required for the Work shall be provided by the Contractor and shall be incidental to the contract.

1-05.4(2) Bridge and Structure Surveys
(October 1, 2005 APWA GSP)

For all structural work such as bridges and retaining walls, the Contractor shall retain as a part of Contractor's organization an experienced team of surveyors.

The Contractor shall provide all surveys required to complete the structure, except the following primary survey control which will be provided by the Engineer:

1. Centerline or offsets to centerline of the structure.
2. Stations of abutments and pier centerlines.
3. A sufficient number of bench marks for levels to enable the Contractor to set grades at reasonably short distances.
4. Monuments and control points as shown in the Plans.

The Contractor shall establish all secondary survey controls, both horizontal and vertical, as necessary to assure proper placement of all project elements based on the primary control points provided by the Engineer. Survey work shall be within the following tolerances:

Stationing	+.01 foot
Alignment	+.01 foot (between successive points)
Superstructure Elevations	+.01 foot (from plan elevations)
Substructure Elevations	+.05 foot (from plan elevations)

During the progress of the work, the Contractor shall make available to the Engineer all field books including survey information, footing elevations, cross sections and quantities.

The Contractor shall be fully responsible for the close coordination of field locations and measurements with appropriate dimensions of structural members being fabricated.

.

1-05.7 Removal of Defective and Unauthorized Work
(October 1, 2005 APWA GSP)

Supplement this section with the following:

If the Contractor fails to remedy defective or unauthorized work within the time specified in a written notice from the Engineer, or fails to perform any part of the work required by the Contract Documents, the Engineer may correct and remedy such work as may be identified in the written notice, with Contracting Agency forces or by such other means as the Contracting Agency may deem necessary.

If the Contractor fails to comply with a written order to remedy what the Engineer determines to be an emergency situation, the Engineer may have the defective and unauthorized work corrected immediately, have the rejected work removed and replaced, or have work the Contractor refuses to perform completed by using Contracting Agency or other forces. An emergency situation is any situation when, in the opinion of the Engineer, a delay in its remedy could be potentially unsafe, or might cause serious risk of loss or damage to the public.

Direct or indirect costs incurred by the Contracting Agency attributable to correcting and remedying defective or unauthorized work, or work the Contractor failed or refused to perform, shall be paid by the Contractor. Payment will be deducted by the Engineer from monies due, or to become due, the Contractor. Such direct and indirect costs shall include in particular, but without limitation, compensation for additional professional services required, and costs for repair and replacement of work of others destroyed or damaged by correction, removal, or replacement of the Contractor's unauthorized work.

No adjustment in contract time or compensation will be allowed because of the delay in the performance of the work attributable to the exercise of the Contracting Agency's rights provided by this Section.

The rights exercised under the provisions of this section shall not diminish the Contracting Agency's right to pursue any other avenue for additional remedy or damages with respect to the Contractor's failure to perform the work as required.

1-05.11 Final Inspection

Delete this section and replace it with the following:

1-05.11 Final Inspections and Operational Testing
(October 1, 2005 APWA GSP)

1-05.11(1) Substantial Completion Date

When the Contractor considers the work to be substantially complete, the Contractor shall so notify the Engineer and request the Engineer establish the Substantial Completion Date. The Contractor's request shall list the specific items of work that remain to be completed in order to reach physical completion. The Engineer will schedule an inspection of the work with the Contractor to determine the status of completion. The Engineer may also establish the Substantial Completion Date unilaterally.

If, after this inspection, the Engineer concurs with the Contractor that the work is substantially complete and ready for its intended use, the Engineer, by written notice to the Contractor, will set the Substantial Completion Date. If, after this inspection the Engineer does not consider the work substantially complete and ready for its intended use, the Engineer will, by written notice, so notify the Contractor giving the reasons therefore.

Upon receipt of written notice concurring in or denying substantial completion, whichever is applicable, the Contractor shall pursue vigorously, diligently and without unauthorized interruption, the work necessary to reach Substantial and Physical Completion. The Contractor shall provide the Engineer with a revised schedule indicating when the Contractor expects to reach substantial and physical completion of the work.

The above process shall be repeated until the Engineer establishes the Substantial Completion Date and the Contractor considers the work physically complete and ready for final inspection.

1-05.11(2) Final Inspection and Physical Completion Date

When the Contractor considers the work physically complete and ready for final inspection, the Contractor by written notice, shall request the Engineer to schedule a final inspection. The Engineer will set a date for final inspection. The Engineer and the Contractor will then make a final inspection and the Engineer will notify the Contractor in writing of all particulars in which the final inspection reveals the work incomplete or unacceptable. The Contractor shall immediately take such corrective measures as are necessary to remedy the listed deficiencies. Corrective work shall be pursued vigorously, diligently, and without interruption until physical completion of the listed deficiencies. This process will continue until the Engineer is satisfied the listed deficiencies have been corrected.

If action to correct the listed deficiencies is not initiated within 7 days after receipt of the written notice listing the deficiencies, the Engineer may, upon written notice to the Contractor, take whatever steps are necessary to correct those deficiencies pursuant to Section 1-05.7. The Contractor will not be allowed an extension of contract time because of a delay in the performance of the work attributable to the exercise of the Engineer's right hereunder.

Upon correction of all deficiencies, the Engineer will notify the Contractor and the Contracting Agency, in writing, of the date upon which the work was considered physically complete. That date shall constitute the Physical Completion Date of the contract, but shall not imply acceptance of the work or that all the obligations of the Contractor under the contract have been fulfilled.

1-05.11(3) Operational Testing

It is the intent of the Contracting Agency to have at the Physical Completion Date a complete and operable system. Therefore when the work involves the installation of machinery or other mechanical equipment; street lighting, electrical distribution or signal systems; irrigation systems; buildings; or other similar work it may be desirable for the Engineer to have the Contractor operate and test the work for a period of time after final inspection but prior to the physical completion date. Whenever items of work are listed in the Contract Provisions for operational testing they shall be fully

tested under operating conditions for the time period specified to ensure their acceptability prior to the Physical Completion Date. During and following the test period, the Contractor shall correct any items of workmanship, materials, or equipment which prove faulty, or that are not in first class operating condition. Equipment, electrical controls, meters, or other devices and equipment to be tested during this period shall be tested under the observation of the Engineer, so that the Engineer may determine their suitability for the purpose for which they were installed. The Physical Completion Date cannot be established until testing and corrections have been completed to the satisfaction of the Engineer.

The costs for power, gas, labor, material, supplies, and everything else needed to successfully complete operational testing, shall be included in the unit contract prices related to the system being tested, unless specifically set forth otherwise in the proposal.

Operational and test periods, when required by the Engineer, shall not affect a manufacturer's guaranties or warranties furnished under the terms of the contract.

1-05.13 Superintendents, Labor and Equipment of Contractor
(March 25, 2009 APWA GSP)

Revise the seventh paragraph to read:

Whenever the Contracting Agency evaluates the Contractor's qualifications pursuant to Section 1-02.14, it will take these performance reports into account.

1-05.15 Method of Serving Notices
(March 25, 2009 APWA GSP)

Revise the second paragraph to read:

All correspondence from the Contractor shall be directed to the Project Engineer. All correspondence from the Contractor constituting any notification, notice of protest, notice of dispute, or other correspondence constituting notification required to be furnished under the Contract, must be in paper format, hand delivered or sent via mail delivery service to the Project Engineer's office. Electronic copies such as e-mails or electronically delivered copies of correspondence will not constitute such notice and will not comply with the requirements of the Contract.

Add the following new section:

1-05.16 Water and Power
(October 1, 2005 APWA GSP)

The Contractor shall make necessary arrangements, and shall bear the costs for power and water necessary for the performance of the work, unless the contract includes power and water as a pay item.

Add the following new section:

1-05.17 Oral Agreements
(October 1, 2005 AWPA GSP)

No oral agreement or conversation with any officer, agent, or employee of the Contracting Agency, either before or after execution of the contract, shall affect or modify any of the terms or obligations contained in any of the documents comprising the contract. Such oral agreement or conversation shall be considered as unofficial information and in no way binding upon the Contracting Agency, unless subsequently put in writing and signed by the Contracting Agency.

END OF SECTION

SUBMITTAL TRANSMITTAL FORM

ADA Improvements Phase 2
Project Number CIP-00030-04
Specification No. PW14-0699N

ATTN: Engineering Division Date: _____

Submittal Number _____

Specification Number _____ Bid Item No. _____

Submittal Description _____

We are sending you:

Copies	Date	Page	Description

Transmitted: ☐ Submittals (Product Data) for information only.
☐ Submittals for review and comment.

Remarks: _____

Certify Either A or B:

☐ A. This document has been detail-checked for accuracy of content and for compliance with the contract documents **(no exceptions)**. The information contained herein has been fully coordinated with all involved Subcontractors.

☐ B. This document has been detail-checked for accuracy of content and for compliance with the contract documents **except for the attached deviations**. The information contained herein has been fully coordinated with all involved Subcontractors.

Certified By: _____
Signature

1-06 CONTROL OF MATERIAL

1-06.1 Approval of Materials Prior To Use
(September 15, 2010 Tacoma GSP)

The first sentence is revised to read:

All materials and equipment shall be submitted for review in accordance with section 1-05.3 of these special provisions.

For aggregates, the Contractor shall notify the Engineer of all proposed aggregates. The Contractor shall use the Aggregate Source Approval (ASA) Database.

All equipment, materials, and articles incorporated into the permanent Work:

1. Shall be new, unless the Special Provisions or Standard Specifications permit otherwise;

2. Shall meet the requirements of the Contract and be approved by the Engineer;

3. May be inspected or tested at any time during their preparation and use; and

4. Shall not be used in the Work if they become unfit after being previously approved.

1-06.1(1) Qualified Products List (QPL)

This section is revised in its entirety to read:

QPL's are not accepted by the City.

1-06.1(2) Request for Approval of Material (RAM)

This section is deleted in its entirety:

1-06.1(4) Fabrication Inspection Expense
(June 27, 2011 AWPA GSP)

Delete this section in its entirety:

END OF SECTION

1-07 LEGAL RELATIONS AND RESPONSIBILITIES TO THE PUBLIC

1-07.1 Laws to be Observed
(October 1, 2005 APWA GSP)

Supplement this section with the following:

In cases of conflict between different safety regulations, the more stringent regulation shall apply.

The Washington State Department of Labor and Industries shall be the sole and paramount administrative agency responsible for the administration of the provisions of the Washington Industrial Safety and Health Act of 1973 (WISHA).

The Contractor shall maintain at the project site office, or other well-known place at the project site, all articles necessary for providing first aid to the injured. The Contractor shall establish, publish, and make known to all employees, procedures for ensuring immediate removal to a hospital, or doctor's care, persons, including employees, who may have been injured on the project site. Employees should not be permitted to work on the project site before the Contractor has established and made known procedures for removal of injured persons to a hospital or a doctor's care.

The Contractor shall have sole responsibility for the safety, efficiency, and adequacy of the Contractor's plant, appliances, and methods, and for any damage or injury resulting from their failure, or improper maintenance, use, or operation. The Contractor shall be solely and completely responsible for the conditions of the project site, including safety for all persons and property in the performance of the work. This requirement shall apply continuously, and not be limited to normal working hours. The required or implied duty of the Engineer to conduct construction review of the Contractor's performance does not, and shall not, be intended to include review and adequacy of the Contractor's safety measures in, on, or near the project site.

1-07.2 State Taxes

Delete this section, including its sub-sections, in its entirety and replace it with the following:

1-07.2 State Tax
(June 27, 2011 APWA GSP)

The Washington State Department of Revenue has issued special rules on the State sales tax. Sections 1-07.2(1) through 1-07.2(3) are meant to clarify those rules. The Contractor should contact the Washington State Department of Revenue for answers to questions in this area. The Contracting Agency will not adjust its payment if the Contractor bases a bid on a misunderstood tax liability.

The Contractor shall include all Contractor-paid taxes in the unit bid prices or other contract amounts. In some cases, however, state retail sales tax will not be included. Section 1-07.2(2) describes this exception.

The Contracting Agency will pay the retained percentage (or release the Contract Bond if a FHWA-funded Project) only if the Contractor has obtained from the Washington State Department of Revenue a certificate showing that all contract-related taxes have been paid (RCW 60.28.051). The Contracting Agency may deduct from its payments to the Contractor any amount the Contractor may owe the Washington State Department of Revenue, whether the amount owed relates to this contract or not. Any amount so deducted will be paid into the proper State fund.

1-07.2(1) State Sales Tax — Rule 171

WAC 458-20-171, and its related rules, apply to building, repairing, or improving streets, roads, etc., which are owned by a municipal corporation, or political subdivision of the state, or by the United States, and which are used primarily for foot or vehicular traffic. This includes storm or combined sewer systems within and included as a part of the street or road drainage system and power lines when such are part of the roadway lighting system. For work performed in such cases, the Contractor shall include Washington State Retail Sales Taxes in the various unit bid item prices, or other contract amounts, including those that the Contractor pays on the purchase of the materials, equipment, or supplies used or consumed in doing the work.

1-07.2(2) State Sales Tax — Rule 170

WAC 458-20-170, and its related rules, apply to the constructing and repairing of new or existing buildings, or other structures, upon real property. This includes, but is not limited to, the construction of streets, roads, highways, etc., owned by the state of Washington; water mains and their appurtenances; sanitary sewers and sewage disposal systems unless such sewers and disposal systems are within, and a part of, a street or road drainage system; telephone, telegraph, electrical power distribution lines, or other conduits or lines in or above streets or roads, unless such power lines become a part of a street or road lighting system; and installing or attaching of any article of tangible personal property in or to real property, whether or not such personal property becomes a part of the realty by virtue of installation.

For work performed in such cases, the Contractor shall collect from the Contracting Agency, retail sales tax on the full contract price. The Contracting Agency will automatically add this sales tax to each payment to the Contractor. For this reason, the Contractor shall not include the retail sales tax in the unit bid item prices, or in any other contract amount subject to Rule 170, with the following exception.

Exception: The Contracting Agency will not add in sales tax for a payment the Contractor or a subcontractor makes on the purchase or rental of tools, machinery, equipment, or consumable supplies not integrated into the project. Such sales taxes shall be included in the unit bid item prices or in any other contract amount.

1-07.2(3) Services

The Contractor shall not collect retail sales tax from the Contracting Agency on any contract wholly for professional or other services (as defined in Washington State Department of Revenue Rules 138 and 244).

1-07.9 Wages

1-07.9(5) Required Documents
(March 1, 2004 Tacoma GSP)

The first sentence of the third paragraph is revised to read:

Weekly certified payrolls shall be submitted for the Contractor and all lower tier subcontractors or agents.

This section is supplemented with the following:

Where fringe benefits are paid in cash, certified payrolls shall include the fringe benefit dollar amount paid to each employee for each employee classification.

Where fringe benefits are paid into approved plans, funds, or programs, the amount of the fringe benefits shall be identified in the "Benefit Distribution" section of the Certified Payroll Affirmation form.

1-07.9(5) Required Documents
(January 24, 2011 APWA GSP)

Supplement this section with the following:

The Contractor or subcontractor directly contracting for "Off-Site, Prefabricated, Non-Standard, Project Specific Items" as defined below shall identify and report information required on the addendum to the "Affidavit of Wages Paid" form filed with the Department of Labor and Industries [form F700-164-000]. The Contractor shall include language in its subcontracts requiring subcontractors and lower-tier subcontractors to comply with the reporting requirements for "Off-Site, Prefabricated, Non-Standard, Project Specific Item" on the Affidavit of Wages Paid form addendum.

The reporting requirement for Items shall apply for all public works contracts estimated to cost over $1 million entered into by the Contracting Agency and Contractor between September 1, 2010 through December 31, 2013.

"Off-site, prefabricated, nonstandard, project specific items" means products or items that are:

1. Made primarily of architectural or structural precast concrete, fabricated steel, pipe and pipe systems, or sheet metal and sheet metal duct work; and
2. Produced specifically for this Project and not considered to be regularly available shelf items; and
3. Produced or manufactured by labor expended to assemble or modify standard items; and
4. Produced at an off-site location outside the State of Washington.

The Contractor or subcontractor shall comply with the reporting requirements and instructions on the Affidavit of Wages Paid form, and shall report the following information on the Affidavit of Wages Paid form submitted to the Department of Labor and Industries in order to comply with the reporting requirements for use of "Off-Site, Prefabricated, Non-Standard, Project Specific" items:

1. The estimated cost of the project;
2. The name of the Contracting Agency and the project title;

3. The contract value of the off-site, prefabricated, nonstandard, project specific items produced outside of Washington State, including labor and materials; and
4. The name, address, and federal employer identification number of the contractor that produced the off-site, prefabricated, nonstandard, project specific items.

The Contracting Agency may direct the Contractor, at no additional cost to the Contracting Agency, to remove and substitute any subcontractor(s) found to be out of compliance with the "Off-Site Prefabricated Non-Standard Project Specific Items" reporting requirements more than one time as determined by the Department of Labor and Industries.

1-07.15 Temporary Water Pollution/Erosion Control
(March 23, 2010 Tacoma GSP)

The third and fourth paragraphs are revised to read:

Stormwater or dewatering water that has come in contact with concrete rubble, concrete pours, or cement treated soils shall be maintained to pH 8.5 or less before it is allowed to enter waters of the State or the City stormwater system. If pH exceeds 8.5, the Contractor shall immediately discontinue work and initiate treatment according to the plan to lower the pH. Work may resume, with treatment, once the pH of the stormwater is 8.5 or less or it can be demonstrated that the runoff will not reach surface waters or the City stormwater system.

High pH process water shall not be discharged to waters of the State or the City stormwater system. Unless specific measures are identified in the Special Provisions, high pH water may be infiltrated, dispersed in vegetation or compost, or discharged to a sanitary sewer system. Disposal shall be in accordance with the City of Tacoma Surface Water Management Manual or to City wastewater system with proper approval. Water being infiltrated or dispersed shall have no chance of discharging directly to waters of the State or the City stormwater system, including wetlands or conveyances that indirectly lead to waters of the State. High pH process water shall be treated to within a range of 6.5 to 8.5 pH units prior to infiltration to ensure the discharge does not cause a violation of groundwater quality standards. If water is discharged to the sanitary sewer, the Contractor shall provide a copy of permits and requirements for placing the material into a sanitary sewer system prior to beginning the work. Process water may be collected and disposed of by the Contractor off the project site. The Contractor shall provide a copy of the permit for an approved waste site for the disposal of the process water prior to the start of work that generates the process water. A Special Approved Discharge permit shall be required for all discharges to the sanitary sewer system.

1-07.15(1) Spill Prevention, Control and Countermeasures Plan
(February 9, 2011 Tacoma GSP)

This section is revised to read:

The Contractor shall prepare a project-specific spill prevention, control, and countermeasures plan (SPCC Plan) that will be used for the duration of the project. The Contractor shall submit the plan to the Project Engineer no later than the date of

the preconstruction conference. No on-site construction activities may commence until the Contracting Agency accepts an SPCC Plan for the project.

The term “hazardous materials,” as used in this Specification, is defined in Chapter 447 of the WSDOT Environmental Procedures Manual (M 31-11). Occupational safety and health requirements that may pertain to SPCC Plan implementation are contained in, but not limited to, WAC 296-824 and WAC 296-843.

Implementation Requirements

The SPCC Plan shall be updated by the Contractor throughout project construction so that the written plan reflects actual site conditions and practices. The Contractor shall update the SPCC Plan at least annually and maintain a copy of the updated SPCC Plan on the project site. All project employees shall be trained in spill prevention and containment, and they shall know where the SPCC Plan and spill response kits are located and have immediate access to them.

If hazardous materials are encountered or spilled during construction, the Contractor shall do everything possible to control and contain the material until appropriate measures can be taken. The Contractor shall supply and maintain spill response kits of appropriate size within close proximity to hazardous materials and equipment.

The Contractor shall implement the spill prevention measures identified in the SPCC Plan before performing any of the following:

1. Placing materials or equipment in staging or storage areas.

2. Refueling, washing, or maintaining equipment.

3. Stockpiling contaminated materials.

SPCC Plan Element Requirements

The SPCC Plan shall set forth the following information in the following order:

1. Responsible Personnel
   Identify the name(s), title(s), and contact information, including a 24/7 emergency contact number, for the personnel responsible for implementing and updating the plan, including all spill responders.

2. Spill Reporting
   List the names and telephone numbers of the Federal, State, and local agencies the Contractor shall notify in the event of a spill. The City of Tacoma contact will be the Wastewater Treatment Plant Operations number at 253.591.5592.

3. Project and Site Information
   Describe the following items:
   A. The project Work.
   B. The site location and boundaries.
   C. The drainage pathways from the site, including both stormwater and sanitary conveyance pathways.
   D. Nearby waterways and sensitive areas and their distances from the site.

4. Potential Spill Sources
   Describe each of the following for all potentially hazardous materials brought or generated on-site (including materials used for equipment operation, refueling, maintenance, or cleaning):
   A. Name of material and its intended use.
   B. Estimated maximum amount on-site at any one time.
   C. Location(s) (including any equipment used below the ordinary high water line) where the material will be staged, used, and stored and the distance(s) from nearby waterways and sensitive areas.
   D. Decontamination location and procedure for equipment that comes into contact with the material.
   E. Disposal procedures.
   F. Include a Material Safety Data Sheet (MSDS) for each potentially hazardous material.

5. Pre-Existing Contamination
   Describe any pre-existing contamination and contaminant sources (such as buried pipes or tanks) in the project area that are described in the Contract documents. Identify equipment and work practices that will be used to prevent the release of contamination.

6. Spill Prevention and Response Training
   Describe how and when all personnel (including refueling Contractors and Subcontractors) will be trained in spill prevention, containment, and response in accordance with the Plan. Describe how and when all spill responders will be trained in accordance with WAC 296-824.

7. Spill Prevention
   Describe the following items:

   A. Spill response kit contents and location(s).
   B. Security measures for potential spill sources.
   C. Secondary containment practices and structures for all containers to handle the maximum volume of potential spill of hazardous materials.
   D. Methods used to prevent stormwater from contacting hazardous materials.
   E. Site inspection procedures and frequency.
   F. Equipment and structure maintenance practices.
   G. Daily inspection and cleanup procedures that ensure all equipment used below the ordinary high water line is free of all external petroleum-based products.
   H. Refueling procedures for equipment that cannot be moved from below the ordinary high water line.

8. Spill Response
   Outline the response procedures the Contractor will follow for each scenario listed below. Include a description of the actions the Contractor shall take and the specific on-site spill response equipment that shall be used to assess the spill, secure the area, contain and eliminate the spill source, and clean up and dispose of spilled and contaminated material.

Response procedures shall be outlined in the Spill Response section and shall include notification to the City of Tacoma Wastewater Treatment Plant Operations number at 253.591.5592.

A. A spill of each type of hazardous material at each location identified in 4, above.
B. Stormwater that has come into contact with hazardous materials.
C. Drainage pathways from the site, including both stormwater and sanitary conveyance pathways.
D. A release or spill of any unknown pre-existing contamination and contaminant sources (such as buried pipes or tanks) encountered during project Work.
E. A spill occurring during Work with equipment used below the ordinary high water line.

If the Contractor will use a Subcontractor for spill response, provide contact information for the Subcontractor under item 1 (above), identify when the Subcontractor will be used, and describe actions the Contractor shall take while waiting for the Subcontractor to respond.

9. Project Site Map
   Provide a map showing the following items:

   A. Site location and boundaries.
   B. Site access roads.
   C. Drainage pathways from the site.
   D. Nearby waterways and sensitive areas.
   E. Hazardous materials, equipment, and decontamination areas identified in 4, above.
   F. Pre-existing contamination or contaminant sources described in 5, above.
   G. Spill prevention and response equipment described in 7 and 8, above.

10. Spill Report Forms
    Provide a copy of the spill report form(s) that the Contractor will use in the event of a release or spill.

Payment

Payment will be made in accordance with Section 1-04.1 for the following Bid item when it is included in the Proposal:

"SPCC Plan," lump sum.

When the written SPCC Plan is accepted by the Contracting Agency, the Contractor shall receive 50-percent of the lump sum Contract price for the plan.

The remaining 50-percent of the lump sum price will be paid after the materials and equipment called for in the plan are mobilized to the project.

The lump sum payment for "SPCC Plan" shall be full pay for:

1. All costs associated with creating the accepted SPCC Plan.

2. All costs associated with providing and maintaining the on-site spill prevention equipment described in the accepted SPCC Plan.

3. All costs associated with providing and maintaining the on-site standby spill response equipment and materials described in the accepted SPCC Plan.

4. All costs associated with implementing the spill prevention measures identified in the accepted SPCC Plan.

5. All costs associated with updating the SPCC Plan as required by this Specification.

As to other costs associated with releases or spills, the Contractor may request payment as provided for in the Contract. No payment shall be made if the release or spill was caused by or resulted from the Contractor's operations, negligence, or omissions.

1-07.16 Protection and Restoration of Property

1-07.16(1) Private/Public Property
(January 13, 2011 Tacoma GSP)
This section is supplemented with the following:

Stockpiling in City of Tacoma right-of-way or on existing or new improvements shall not occur unless approved by the Engineer. All stockpile sites shall be restored to as good or better condition.

The Contractor shall contact all property owners and tenants in the vicinity of this project, via newsletter/mailing, a minimum of one (1) week prior to start of construction. The Contractor shall submit a draft of the property owner notification prior to posting/mailing.

The newsletter/mailing shall advise the owners and tenants of the construction schedule and indicate the Contractor's name, contact person, and telephone numbers.

1-07.17 Utilities and Similar Facilities
(June 1, 2010 Tacoma GSP)
The first paragraph is supplemented with the following:

Public and private utilities or their Contractors will furnish all work necessary to adjust, relocate, replace, or construct their facilities unless otherwise provided for in the Plans or these Special Provisions. Such adjustment, relocations, replacement, or construction will be done within the time for performance of this project. The Contractor shall coordinate their work with such adjustment, relocation, or replacement of utility work. This may require the Contractor to phase their work in a manner that will allow for the utility work.

The Contractor shall coordinate their work with all utilities and other organizations, which have to adjust or revise their facilities within the project area. These may include, but are not limited to:

- City of Tacoma Light Division, Contact: Daniel Pitsch, phone: (253) 502-8229
- City of Tacoma Water Division, Contact: John Sewell, phone: (253) 502-8742
- City of Tacoma Traffic Division, Signal/Streetlight Shop, phone: (253) 591-5287
- Puget Sound Energy, Contact: Suzanne Anders, phone: (253) 476-6037
- QWest., Contact: Judy Cissell, phone: (253) 597-5331
- AT&T Broadband Information Services, Contact: Sheikh Moiwo, phone: (253) 856-2996
- One-Number Locator Service "One Call System" telephone **1-800-424-5555**

If the Contractor plans to excavate or trench within ten (10) feet of any utility pole or other electric or water utility structure owned by the City of Tacoma, the Contractor shall contact the City of Tacoma, Department of Public Utilities, telephone number 593-8353, and arrange for an inspection before proceeding. The Contractor shall perform, at the Contractor's expense, such additional work as is required to protect the pole or structure from subsidence. The Contractor may be directed to suspend work at the site of any such excavation until such utility structures are adequately protected.

Garbage, recycling, and yard waste pick up within the project limits vary between project locations and can be found at:
http://www.govme.com/Common/govME/MyTacoma/CollectionCalendar.aspx

1-07.18 Public Liability and Property Damage Insurance
Delete this section in its entirety, and replace it with the following:

1-07.18 Insurance
(August 15, 2011 Tacoma GSP)

1-07.18(1) General Requirements

A. The Contractor shall obtain the insurance described in this section from insurers approved by the State Insurance Commissioner pursuant to RCW Title 48. The insurance must be provided by an insurer with a rating of A-: VII or higher in the A.M. Best's Key Rating Guide, which is licensed to do business in the state of Washington (or issued as a surplus line by a Washington Surplus lines broker). The Contracting Agency reserves the right to approve or reject the insurance provided, based on the insurer (including financial condition), terms and coverage, the Certificate of Insurance, and/or endorsements.

B. The Contractor shall keep this insurance in force during the term of the contract and for thirty (30) days after the Physical Completion date, unless otherwise indicated (see C. below).

C. If any insurance policy is written on a claims made form, its retroactive date, and that of all subsequent renewals, shall be no later than the effective date of this Contract. The policy shall state that coverage is claims made, and state the retroactive date. Claims-made form coverage shall be maintained by the Contractor for a minimum of 36 months following the Final Completion or earlier termination of this contract, and the Contractor shall annually

provide the Contracting Agency with proof of renewal. If renewal of the claims made form of coverage becomes unavailable, or economically prohibitive, the Contractor shall purchase an extended reporting period ("tail") or execute another form of guarantee acceptable to the Contracting Agency to assure financial responsibility for liability for services performed.

D. The insurance policies shall contain a "cross liability" provision.

E. The Contractor's and all subcontractors' insurance coverage shall be primary and non-contributory insurance as respects the Contracting Agency's insurance, self-insurance, or insurance pool coverage.

F. The Contractor shall provide the Contracting Agency and all Additional Insureds with written notice of any policy cancellation or material change to the policy, within two business days of their receipt of such notice.

G. Upon request, the Contractor shall forward to the Contracting Agency a full and certified copy of the insurance policy(s).

H. The Contractor shall not begin work under the contract until the required insurance has been obtained and approved by the Contracting Agency.

I. Failure on the part of the Contractor to maintain the insurance as required shall constitute a material breach of contract, upon which the Contracting Agency may, after giving five business days notice to the Contractor to correct the breach, immediately terminate the contract or, at its discretion, procure or renew such insurance and pay any and all premiums in connection therewith, with any sums so expended to be repaid to the Contracting Agency on demand, or at the sole discretion of the Contracting Agency, offset against funds due the Contractor from the Contracting Agency.

J. All costs for insurance shall be incidental to and included in the unit or lump sum prices of the contract and no additional payment will be made.

1-07.18(2) Additional Insured

All insurance policies, with the exception of Professional Liability and Workers Compensation, shall name the following listed entities as additional insured(s):

- the Contracting Agency and its officers, elected officials, employees, agents, and volunteers

The above-listed entities shall be additional insured(s) for the full available limits of liability maintained by the Contractor, whether primary, excess, contingent or otherwise, irrespective of whether such limits maintained by the Contractor are greater than those required by this Contract, and irrespective of whether the Certificate of Insurance provided by the Contractor pursuant to 1-07.18(3) describes limits lower than those maintained by the Contractor.

1-07.18(3) Subcontractors

Contractor shall ensure that each subcontractor of every tier obtains and maintains at a minimum the insurance coverages listed in 1-07.18(5)A and 1-07.18(5)B. Upon request of the Contracting Agency, the Contractor shall provide evidence of such insurance.

1-07.18(4) Evidence of Insurance

The Contractor shall deliver to the Contracting Agency a Certificate(s) of Insurance and endorsements for each policy of insurance meeting the requirements set forth herein when the Contractor delivers the signed Contract for the work. The certificate and endorsements must conform to the following requirements:

1. An ACORD certificate or a form determined by the Contracting Agency to be equivalent.
2. Copies of all endorsements naming Contracting Agency and all other entities listed in 1-07.18(2) as Additional Insured(s), showing the policy number. The Contractor may submit a copy of any blanket additional insured clause from its policies instead of a separate endorsement. A statement of additional insured status on an ACORD Certificate of Insurance shall not satisfy this requirement.
3. Any other amendatory endorsements to show the coverage required herein.

1-07.18(5) Coverages and Limits

The insurance shall provide the minimum coverages and limits set forth below. Providing coverage in these stated minimum limits shall not be construed to relieve the Contractor from liability in excess of such limits. All deductibles and self-insured retentions must be disclosed and are subject to approval by the Contracting Agency. The cost of any claim payments falling within the deductible or self-insured retention shall be the responsibility of the Contractor.

1-07.18(5)A Commercial General Liability

A policy of Commercial General Liability Insurance, including:

Per project aggregate
Premises/Operations Liability
Products/Completed Operations – for a period of one year following final acceptance of the work.
Personal/Advertising Injury
Contractual Liability
Independent Contractors Liability
Stop Gap / Employers' Liability
Explosion, Collapse, or Underground Property Damage (XCU)
Blasting (only required when the Contractor's work under this Contract includes exposures to which this specified coverage responds)

Such policy must provide the following minimum limits:

$1,000,000	Each Occurrence
$2,000,000	General Aggregate
$1,000,000	Products & Completed Operations Aggregate
$1,000,000	Personal & Advertising Injury, each offence

Stop Gap / Employers' Liability

$1,000,000	Each Accident
$1,000,000	Disease - Policy Limit
$1,000,000	Disease - Each Employee

1-07.18(5)B Automobile Liability

Automobile Liability for owned, non-owned, hired, and leased vehicles, with an MCS 90 endorsement and a CA 9948 endorsement attached if "pollutants" are to be transported. Such policy(ies) must provide the following minimum limit:

$1,000,000 combined single limit

1-07.18(5)C Workers' Compensation

The Contractor shall comply with Workers' Compensation coverage as required by the Industrial Insurance laws of the state of Washington.

1-07.23 Public Convenience and Safety

1-07.23(1) Construction under Traffic
(March 1, 2004 Tacoma GSP)

This section is supplemented with the following:

To minimize the disruption to access to adjacent properties, and to Pierce Transit operations, the lane closure area shall be limited to that area of active work and necessary for appropriate lane closure tapers. The Contractor shall stage work to maintain access to and egress from all properties at all times.

A safe pedestrian access shall be provided at all times through the project area. All lane closures shall be coordinated with the adjacent businesses, other contractors working within the project vicinity, local transit agencies and the City.

Where, in the opinion of the Engineer, parking is a hazard to through traffic or to the construction work, parking may be restricted either entirely or during the time when it creates a hazard. Signs for restricting parking shall be approved by the City and placed by the Contractor. The Contractor shall be responsible for and shall maintain all such signs. The replacement of signs restricting parking shall be as approved by the Engineer.

The Contractor shall notify all property owners and tenants of detours, street and alley closures, or other restrictions that may interfere with their access. Notification shall be at least twenty-four (24) hours in advance for residential property, and at least forty-eight (48) hours in advance for commercial property.

Emergency traffic, such as police, fire, and disaster units, shall be provided access at all times. In addition, the Contractor shall coordinate Contractor activities with all disposal firms and transit bus service that may be operating in the project area.

If street closures or lane restrictions, not provided for in the Specifications, are allowed subsequent to award of the contract, an equitable adjustment of the Contract amount shall be negotiated.

It is the intent of the Contract to effectively prevent the deposition of debris on streets in areas of public traffic or where such debris may be transported into a drainage system. When construction operations are such that debris from the work is deposited on the streets, the Contractor shall, at a minimum, remove on a daily basis any deposits or debris which may accumulate on the roadway surface. Should daily

removal be insufficient to keep the streets clean, the Contractor shall perform removal operations on a more frequent basis. If the Engineer determines that a more frequent cleaning is impractical or if the Contractor fails to keep the streets free from deposits and debris resulting from the work, the Contractor shall, upon order of the Engineer, provide facilities for and remove all deposits from the tires or between wheels before trucks or other equipment will be allowed to travel over paved streets. Should the Contractor fail or refuse to clean the streets in question, or the trucks or equipment in question, the Engineer may order the work suspended at the Contractor's risk until compliance with Contractor's obligations is assured, or the Engineer may order the streets in question cleaned by others and such costs incurred by the City in achieving compliance with these contract requirements, including cleaning of the streets, shall be deducted from moneys due or to become due the Contractor on monthly estimate. The Contractor shall have no claim for delay or additional costs should the Engineer choose to suspend the Contractor's work until compliance is achieved.

The sixth paragraph of this section is supplemented with the following:

Trenches backfilled with CDF shall be protected from traffic with steel plates. The plates shall remain in place for 24-hours after placement of the CDF or until CDF is compacted or hardened to prevent rutting by construction equipment or traffic.

1-07.23(2) Construction and Maintenance of Detours
(March 1, 2004 Tacoma GSP)

This section is supplemented with the following:

Detour signing during any allowed road closures shall be in accordance with Detour Plans, when included in the Contract Documents. When plans are not included in the Contract Documents, the Contractor shall submit plans for detours in accordance with the "Manual on Uniform Traffic Control Devices (MUTCD)". In addition, where the Contractor believes an alternate plan will safely and adequately maintain vehicular and pedestrian traffic, the Contractor may submit alternate plans to those for traffic control and detours required by MUTCD or contract documents. Such alternate plans must comply with the MUTCD and shall be in writing and submitted to the Engineer at least fifteen (15) days in advance of their intended use. In general, detouring of arterial traffic must be accomplished on streets designated as City Arterials. Detouring of arterial traffic on non-arterial streets will not be allowed. The acceptance of any alternate plan shall be entirely at the discretion of the Engineer and the Contractor shall have no claim by reason of a plan being rejected or modified, nor shall there be any additional payment by reason of using a substitute plan.

The Contractor shall notify the Engineer three (3) working days in advance of implementation of any street closures/detours allowed under the Contract. Advance notice signing shall be placed a minimum of three (3) working days prior to implementation of any street closure/detour.

A minimum of three (3) working days prior to any street closure, the Contractor shall notify all entities below:

Tacoma Fire Dept.	(253-591-5733)
Tacoma Police Dept.	(253-591-5950)
LESA Communications Center	(253-798-4721 - Opt.#1)
Tacoma Public Schools Transportation Office	(253-571-1853)
Pierce Transit	(253-581-8109)
Tacoma Environmental Services Solid Waste	(253-591-5544)
Tacoma Public Works Engineering Division	(253-591-5500)
Tacoma Public Works Streets and Grounds	(253-591-5495)

(*****)

Pedestrian Control and Protection

If no alternative is proposed within the contract plans, all existing pedestrian routes and access points within the project limits, including sidewalks and crosswalks, shall remain open and clear at all times. **The Contractor shall propose Traffic Control Plans (TCP's) that comply with the MUTCD, ADA requirements, and these Specifications for EACH facility.** The Contractor proposed TCP detailing alternative accessible pedestrian route(s) at each facility shall be approved by the Engineer prior to implementation. The plans will either be returned for correction, approved as noted, or approved for use by the end of a 10-day review period. Each time the plan is returned for correction, an additional 10-day review period may be necessary.

When the Engineer allows work areas to encroach upon a sidewalk or crosswalk area, and minimum clear width of 48-inches cannot be maintained for pedestrian use, an alternative accessible pedestrian route shall be provided. Separation of pedestrians from the work area and vehicular traffic is required.

Protective barricades, fencing, and bridges, together with warning and guidance devices and signs, shall be utilized so that the passageway for pedestrians is safe, well defined and accessible. Whenever pedestrian walkways are provided across excavations, they shall be provided with suitable handrails. Foot bridges shall be safe, strong, and free of bounce and sway, have a slip resistant coating, and be free of cracks, holes and irregularities that could cause tripping. Ramps, with a maximum slope of 8.3%, shall be provided at the entrance and exit of all raised footbridges. The maximum cross slope shall be 2.0%. When the existing facility is illuminated or TCP's requires illumination, illumination shall be provided during the hours of darkness. Retroreflective delineation shall be provided during hours of darkness.

Where accessible pedestrian routes are allowed to be closed by the Engineer during construction, an alternate accessible pedestrian route shall be provided that complies with the MUTCD, ADA requirements and these Specifications. The alternate accessible pedestrian route shall not have abrupt changes in grade or terrain. Barriers and channelizing devices shall be detectable to pedestrians who have visual disabilities. Where it is necessary to divert pedestrians into the roadway, barricading or channelizing devices shall be provided to separate the pedestrian route from the adjacent vehicular traffic lane. Barricading or channelizing devices used to separate pedestrian and vehicular traffic shall be crashworthy and, when struck by vehicles, present a minimum threat to pedestrians, workers, and occupants of impacting vehicles. At no time shall pedestrians be diverted into a portion of the street used concurrently by moving vehicular traffic.

In addition, the Traffic Control Plan for each facility shall address the following:

- All pedestrians, including persons with disabilities, shall be provided with a safe and accessible route.

- The width of the existing pedestrian facility shall be maintained if possible. When it is not possible to maintain a minimum width of 60-inches throughout the entire length of the pedestrian route, a minimum width of 48-inches shall be provided with 60-inch x 60-inch passing zones spaced at maximum intervals of 200-feet to allow individuals in wheelchairs to pass.

- Traffic control devices and other construction materials and features shall not intrude into the usable width of the sidewalk, alternate accessible pedestrian route, or other pedestrian facility.

- Signs and other devices mounted lower than 84-inches above the temporary accessible pedestrian route shall not project more than 4-inches into the accessible pedestrian route.

- A smooth, continuous hard surface shall be provided throughout the entire length and width of the pedestrian route throughout construction. There shall be no curbs or vertical elevation changes greater than ½-inch in grade or terrain that could cause tripping or be a barrier to wheelchair use. Vertical elevation differences between ¼-inch and ½-inch shall be beveled at a maximum 2:1 slope.

- When channelization is used to delineate a pedestrian pathway, a continuous detectable edging shall be provided throughout the length of the facility such that pedestrians using a cane can follow it. Edging shall protrude at least 6-inches above the surface of the sidewalk or pathway with the bottom of the edging a maximum of 2-1/2 inches above the surface.

- Temporary ramps shall be provided when an alternate accessible pedestrian route crosses a curb and no permanent curb ramps are in place. The width of the curb ramp shall be a minimum of 48-inches and the maximum slope of the ramp shall be 8.3%. The maximum cross slope shall be 2.0%. The bottom of the curb ramp shall be flush with the Roadway. Temporary detectable warning mats shall be installed at street crossings.

- When possible, an alternate accessible pedestrian route shall be provided on the same side of the street as the disrupted route. When it is not possible, the alternate route shall be clearly identified at the nearest intersection crossing prior to the closure area.

- Information regarding closed pedestrian routes, alternate crossings, and sign and signal information shall be communicated to pedestrians with visual

disabilities by providing devices such as audible information devices, accessible pedestrian signals, or barriers and channelizing devices that are detectable to the pedestrians traveling with the aid of a cane or who have low vision. At a minimum, all accessible routes, closures, detours, crossings, and parking areas shall be appropriately signed to meet all code requirements.

- It is desirable that pedestrians cross to the opposite side of the roadway at intersections rather than mid-block. Appropriate signing shall be placed at the intersections prior to any pedestrian route closure.

- If not otherwise stated in the contract provisions, access to transit stops shall be provided and maintained at all times. Transit stops may be temporarily relocated with approval of the transit agency and the Project Engineer.

- At locations where adjacent alternate walkways cannot be provided, appropriate signs shall be posted at the limits of construction and in advance of the closure at the nearest crosswalk or intersection, to divert pedestrians across the street. Physical barricades shall be installed to prevent visually impaired people from inadvertently entering a closed area.

- At each facility, temporary ADA parking shall be provided and maintained by the Contractor at a location chosen by the City in coordination with the facility representative. The parking shall be temporarily signed by the Contractor as accessible, and shall consist of three (3) adjacent parking stalls. Temporary parking signage shall meet all current codes. The center stall shall be coned off from vehicles and used as an access aisle for the adjacent two stalls. The Contractor may need to relocate this parking at each facility during the progress of the work based on construction operations, and City and facility needs. The parking shall generally be as close to the building entrance as possible.

- To the greatest extent practicable, the Contractor shall conduct construction operations to avoid, and/or minimally impact, each facility's programmed activities (classes, events, meals, etc.), pedestrian shuttle or pick-up/drop-off locations, parking needs, and deliveries. Contacts for each facility are listed below. These persons shall be contacted only **AFTER BID AWARD** for scheduling and facility operation matters:

    - **Peoples Community Center**
      Michael Bradley, MichaelB@tacomaparks.com, 253-591-5321, ext. 11

    - **Pantages and RialtoTheaters**
      Scott Painter, SPainte@broadwaycenter.org, 253-573-2341

- **Swasey Branch Library**
  Phillip Torgerson, 253-381-1347

Measurement

No specific unit of measurement will apply to the lump sum item for pedestrian control and protection.

Payment

Payment will be made in accordance with Section 1-04.1 for the following Bid item included in the Proposal:

"Pedestrian Control and Protection", lump sum.

The lump sum contract payment shall be full compensation for all costs incurred by the Contractor for coordinating construction with the each facility's business/event/work schedule, traffic requirements, and the construction, maintenance, and removal of all protective barricades, fencing, and bridges, together with warning and guidance devices detailed in the Plans or any alternative accessible pedestrian routes proposed by the Contractor.

1-07.24 Rights of Way
(October 1, 2005 APWA GSP)

Delete this section in its entirety, and replace it with the following:

Street right of way lines, limits of easements, and limits of construction permits are indicated in the Plans. The Contractor's construction activities shall be confined within these limits, unless arrangements for use of private property are made.

Generally, the Contracting Agency will have obtained, prior to bid opening, all rights of way and easements, both permanent and temporary, necessary for carrying out the work. Exceptions to this are noted in the Bid Documents or will be brought to the Contractor's attention by a duly issued Addendum.

Whenever any of the work is accomplished on or through property other than public right of way, the Contractor shall meet and fulfill all covenants and stipulations of any easement agreement obtained by the Contracting Agency from the owner of the private property. Copies of the easement agreements may be included in the Contract Provisions or made available to the Contractor as soon as practical after they have been obtained by the Engineer.

Whenever easements or rights of entry have not been acquired prior to advertising, these areas are so noted in the Plans. The Contractor shall not proceed with any portion of the work in areas where right of way, easements or rights of entry have not been acquired until the Engineer certifies to the Contractor that the right of way or easement is available or that the right of entry has been received. If the Contractor is delayed due to acts of omission on the part of the Contracting Agency in obtaining easements, rights of entry or right of way, the Contractor will be entitled to an extension of time. The Contractor agrees that such delay shall not be a breach of contract.

Each property owner shall be given 48 hours notice prior to entry by the Contractor. This includes entry onto easements and private property where private improvements must be adjusted.

The Contractor shall be responsible for providing, without expense or liability to the Contracting Agency, any additional land and access thereto that the Contractor may desire for temporary construction facilities, storage of materials, or other Contractor needs. However, before using any private property, whether adjoining the work or not, the Contractor shall file with the Engineer a written permission of the private property owner, and, upon vacating the premises, a written release from the property owner of each property disturbed or otherwise interfered with by reasons of construction pursued under this contract. The statement shall be signed by the private property owner, or proper authority acting for the owner of the private property affected, stating that permission has been granted to use the property and all necessary permits have been obtained or, in the case of a release, that the restoration of the property has been satisfactorily accomplished. The statement shall include the parcel number, address, and date of signature. Written releases must be filed with the Engineer before the Completion Date will be established.

END OF SECTION

1-08 PROSECUTION AND PROGRESS

Add the following new section:

1-08.0 Preliminary Matters
(May 25, 2006 APWA GSP)

1-08.0(1) Preconstruction Conference
(October 10, 2008 APWA GSP)

Prior to the Contractor beginning the work, a preconstruction conference will be held between the Contractor, the Engineer and such other interested parties as may be invited. The purpose of the preconstruction conference will be:

1. To review the initial progress schedule;
2. To establish a working understanding among the various parties associated or affected by the work;
3. To establish and review procedures for progress payment, notifications, approvals, submittals, etc.;
4. To establish normal working hours for the work;
5. To review safety standards and traffic control; and
6. To discuss such other related items as may be pertinent to the work.

The Contractor shall prepare and submit at the preconstruction conference the following:

1. A breakdown of all lump sum items;
2. A preliminary schedule of working drawing submittals; and
3. A list of material sources for approval if applicable.

Add the following new section:

1-08.0(2) Hours of Work
(March 3, 2008 Tacoma GSP)

Except in the case of emergency or unless otherwise approved by the Contracting Agency, the normal straight time working hours for the contract shall be any consecutive 8-hour period between 7:00 a.m. and 6:00 p.m. of a working day with a maximum 1-hour lunch break and a 5-day work week. The normal straight time 8-hour working period for the contract shall be established at the preconstruction conference or prior to the Contractor commencing the work.

If a Contractor desires to perform work on holidays, Saturdays, Sundays, or before 7:00 a.m. or after 6:00 p.m. on any day, the Contractor shall apply in writing to the Engineer for permission to work such times. Permission to work longer than an 8-hour period between 7:00 a.m. and 6:00 p.m. is not required. Such requests shall be submitted to the Engineer no later than noon on the working day prior to the day for which the Contractor is requesting permission to work.

Permission to work between the hours of 9:00 p.m. and 7:00 a.m. during weekdays and between the hours of 9:00 p.m. and 9:00 a.m. on weekends or holidays may also be subject to noise control requirements. Approval to continue work during these hours may be revoked at any time the Contractor exceeds the Contracting Agency's noise control regulations or complaints are received from the public or

adjoining property owners regarding the noise from the Contractor's operations. The Contractor shall have no claim for damages or delays should such permission be revoked for these reasons.

Permission to work Saturdays, Sundays, holidays or other than the agreed upon normal straight time working hours Monday through Friday may be given subject to certain other conditions set forth by the Contracting Agency or Engineer. These conditions may include but are not limited to: requiring the Engineer or such assistants as the Engineer may deem necessary to be present during the work; requiring the Contractor to reimburse the Contracting Agency for the costs in excess of straight-time costs for Contracting Agency employees who worked during such times, on non-Federal aid projects; considering the work performed on Saturdays and holidays as working days with regards to the contract time; and considering multiple work shifts as multiple working days with respect to contract time even though the multiple shifts occur in a single 24-hour period. Assistants may include, but are not limited to, survey crews; personnel from the Contracting Agency's material testing lab; inspectors; and other Contracting Agency employees when in the opinion of the Engineer, such work necessitates their presence.

Add the following new section:

1-08.0(3) Reimbursement for Overtime Work of Contracting Agency Employees (September 29, 2009 Tacoma GSP)

Where the Contractor elects to work on a Saturday, Sunday, or holiday, or longer than an 8-hour work shift on a regular working day, as defined in the Standard Specifications, such work shall be considered as overtime work. On all such overtime work, city staff may be required at the discretion of the Engineer. In such case, the Contracting Agency may deduct from amounts due or to become due to the Contractor for the costs in excess of the straight-time costs for employees of the Contracting Agency required to work overtime hours.

The Contractor by these specifications does hereby authorize the Engineer to deduct such costs from the amount due or to become due to the Contractor.

1-08.1 Subcontracting - D/M/WBE Reporting
(September 29, 2009 Tacoma GSP)

The eighth paragraph is revised to read:

On all projects funded with Contracting Agency funds only, the Contractor shall certify to the actual amounts paid Disadvantaged, Minority, or Women's Business Enterprise firms that were used as subcontractors, lower tier subcontractors, manufacturers, regular dealers, or service providers on the contract. <u>This certification shall be submitted to the Engineer, on the form provided by the Engineer, 20 calendar days after physical completion of the contract.</u>

1-08.4 Notice to Proceed and Prosecution of the Work
(June 27, 2011 APWA GSP)

Delete this section in its entirety, and replace it with the following:

Notice to Proceed will be given after the contract has been executed and the contract bond and evidence of insurance have been approved and filed by the Contracting Agency. The Contractor shall not commence with the work until the Notice to Proceed has been given by the Engineer. The Contractor shall commence construction activities on the project site within ten days of the Notice to Proceed Date, unless otherwise approved in writing. The Contractor shall diligently pursue the work to the physical completion date within the time specified in the contract. Voluntary shutdown or slowing of operations by the Contractor shall not relieve the Contractor of the responsibility to complete the work within the time(s) specified in the contract.

When shown in the Plans, the first order of work shall be the installation of high visibility fencing to delineate all areas for protection or restoration, as described in the Contract. Installation of high visibility fencing adjacent to the roadway shall occur after the placement of all necessary signs and traffic control devices in accordance with 1-10.1(2). Upon construction of the fencing, the Contractor shall request the Engineer to inspect the fence. No other work shall be performed on the site until the Contracting Agency has accepted the installation of high visibility fencing, as described in the Contract.

Revise the third and fourth paragraphs to read:

1-08.5 Time for Completion
(June 28, 2007 APWA GSP, Option A)

Contract time shall begin on the first working day following the Notice to Proceed Date.

Each working day shall be charged to the contract as it occurs, until the contract work is physically complete. If substantial completion has been granted and all the authorized working days have been used, charging of working days will cease. Each week the Engineer will provide the Contractor a statement that shows the number of working days: (1) charged to the contract the week before; (2) specified for the physical completion of the contract; and (3) remaining for the physical completion of the contract. The statement will also show the nonworking days and any partial or whole day the Engineer declares as unworkable. Within 10 calendar days after the date of each statement, the Contractor shall file a written protest of any alleged discrepancies in it. To be considered by the Engineer, the protest shall be in sufficient detail to enable the Engineer to ascertain the basis and amount of time disputed. By not filing such detailed protest in that period, the Contractor shall be deemed as having accepted the statement as correct. If the Contractor elects to work 10 hours a day and 4 days a week (a 4-10 schedule) and the fifth day of the week in which a 4-10 shift is worked would ordinarily be charged as a working day then the fifth day of that week will be charged as a working day whether or not the Contractor works on that day.

Revise the sixth paragraph to read:
(June 28, 2007 APWA GSP, Option A)

The Engineer will give the Contractor written notice of the completion date of the contract after all the Contractor's obligations under the contract have been performed by the Contractor. The following events must occur before the Completion Date can be established:

1. The physical work on the project must be complete; and
2. The Contractor must furnish all documentation required by the contract and required by law, to allow the Contracting Agency to process final acceptance of the contract. The following documents must be received by the Project Engineer prior to establishing a completion date:
   a. Certified Payrolls (Federal-aid Projects)
   b. Material Acceptance Certification Documents
   c. Annual Report of Amounts Paid as MBE/WBE Participants or Quarterly Report of Amounts Credited as DBE Participation, as required by the Contract Provisions.
   d. Final Contract Voucher Certification
   e. Property owner releases per Section 1-07.24

This section is supplemented with the following:
(******)

This project shall be physically completed within 30 working days.

****** Work shall be scheduled such that the Peoples Community Center site is the first site started and the first site completed.** Use of this parking lot by another City contractor is expected in April 2015. If the ADA improvements are not complete by this time, the ADA contractor shall coordinate access and activities with the other City contractor. All costs associated with this coordination shall be incidental to this project.

1-08.7 Maintenance During Suspension
(March 3, 2008 Tacoma GSP)
Revise the second paragraph to read:

At no expense to the Contracting Agency, the Contractor shall provide through the construction area a safe, smooth, and unobstructed roadway, sidewalk, and path for public use during suspension (as required in Section 1-07.23 or the Special Provisions). This may include a temporary road or detour.

1-08.9 Liquidated Damages
(March 3, 2008 Tacoma GSP)
Revise the first sentence of the fourth paragraph to read:

When the Contract Work has progressed to the extent that the Contracting Agency has full use and benefit of the facilities, both from the operational and safety standpoint, and only minor incidental Work, replacement of temporary substitute facilities, plant establishment periods, or correction or repair remains to physically complete the total Contract, the Engineer may determine the Contract Work is substantially complete.

END OF SECTION

1-09 MEASUREMENT AND PAYMENT

1-09.6 Force Account
(October 10, 2008 APWA GSP)
Supplement this section with the following:

The Contracting Agency has estimated and included in the Proposal, dollar amounts for all items to be paid per force account, only to provide a common proposal for Bidders. All such dollar amounts are to become a part of Contractor's total bid. However, the Contracting Agency does not warrant expressly or by implication, that the actual amount of work will correspond with those estimates. Payment will be made on the basis of the amount of work actually authorized by Engineer.

(January 13, 2011 Tacoma GSP)
Item #3 of this section is supplemented with the following:

The Contractor shall submit a comprehensive summary list of all equipment anticipated to be used on the project and their associated AGC/WSDOT Equipment Rental Rates. The list shall include the contractor's equipment number, make, model, year, operation rate, standby rate, applicable attachments and any other applicable information necessary to determine the applicable rates in accordance with this section. In addition, the contractor shall submit an Equipment Watch rate sheet (www.equipmentwatch.com) for each piece of equipment in the summary list. Access to the Equipment Watch web site is available at the City's Construction Management Office. Copies requested by the contractor will be charged at the current applicable rate.

1-09.7 Mobilization
(******)
Supplement this section with the following:

Unless specified elsewhere in the Plans or Special Provisions, the following items are included in the payment for "Mobilization":

1. Protection of all existing features.
2. Adjustment of all irrigation pipes and heads and testing of existing irrigation systems.
3. Relocation of site furnishings including existing bike racks, benches, flowerpots, baskets, planters, picnic tables, trashcans.
4. Replacement of any site furnishings damaged during construction.
5. Removal of wheel stops, pipes, signs, poles, railings, and small retaining walls.
6. Filling of holes in pavement areas and building faces with grout, epoxy, or other suitable sealants.

1-09.9 Payments
(June 27, 2011 APWA GSP, Option A)
Supplement this section with the following:

Lump sum item breakdowns are not required when the bid price for the lump sum item is less than $20,000.

(June 27, 2011 APWA GSP, Option B)
Delete the fourth paragraph and replace it with the following:

Progress payments for completed work and material on hand will be based upon progress estimates prepared by the Engineer. A progress estimate cutoff date will be established at the preconstruction conference.

The initial progress estimate will be made not later than 30 days after the Contractor commences the work, and successive progress estimates will be made every month thereafter until the Completion Date. Progress estimates made during progress of the work are tentative, and made only for the purpose of determining progress payment. The progress estimates are subject to change at any time prior to the calculation of the Final Payment.

The value of the progress estimate will be the sum of the following:

1. Unit Price Items in the Bid Form — the approximate quantity of acceptable units of work completed multiplied by the unit price.
2. Lump Sum Items in the Bid Form — based on the approved Contractor's lump sum breakdown for that item, or absent such a breakdown, based on the Engineer's determination.
3. Materials on Hand — 100 percent of invoiced cost of material delivered to Job site or other storage area approved by the Engineer.
4. Change Orders — entitlement for approved extra cost or completed extra work as determined by the Engineer.

Progress payments will be made in accordance with the progress estimate less:

1. Retainage per Section 1-09.9(1), on non FHWA-funded projects;
2. The amount of Progress Payments previously made; and
3. Funds withheld by the Contracting Agency for disbursement in accordance with the Contract Documents.

Progress payments for work performed shall not be evidence of acceptable performance or an admission by the Contracting Agency that any work has been satisfactorily completed. The determination of payments under the contract will be final in accordance with Section 1-05.1.

This section is supplemented with the following:
(March 27, 2003 Tacoma GSP)

Stockpiled Material - The point of acceptance of stockpiled material for payment and quality shall be at the time of incorporation into the contract.

1-09.9(1) Retainage
(May 10, 2006 Tacoma GSP)
The fourth paragraph is supplemented with the following:

6. A "General Release to the City of Tacoma" is on file with the Contracting Agency.
7. A release has been obtained from the City of Tacoma's City Clerk's Office.

1-09.13(3)A Administration of Arbitration
(October 1, 2005 APWA GSP)
Revise the third paragraph to read:

The Contracting Agency and the Contractor mutually agree to be bound by the decision of the arbitrator, and judgment upon the award rendered by the arbitrator may be entered in the Superior Court of the county in which the Contracting Agency's headquarters are located. The decision of the arbitrator and the specific basis for the decision shall be in writing. The arbitrator shall use the contract as a basis for decisions.

END OF SECTION

1-10 TEMPORARY TRAFFIC CONTROL

1-10.1(2) Description
(January 11, 2006 Tacoma GSP)
This section is supplemented by the following:

Only uniformed off-duty police officers shall be used to control traffic when it is necessary to override or provide traffic control at signalized intersections.

The City will make all necessary temporary adjustments to existing traffic signals and traffic signal activators.

Existing signs shall not be removed until the Contractor has provided for temporary measures sufficient to safeguard and direct traffic after existing signs have been removed. Preservation of temporary traffic control and street name signs shall be the sole responsibility of the Contractor.

As the work progresses and permits, temporarily relocated and/or removed traffic signs shall be reset in their permanent location. Permanent signs and other traffic control devices damaged or lost by the Contractor shall be replaced or repaired at the Contractor's expense.

1-10.2(1) General
(March 3, 2008 Tacoma GSP)
This section is supplemented with the following:

The primary and alternate Traffic Control Supervisor shall be certified by one of the following:

The Northwest Laborers-Employee Training Trust
27055 Ohio Ave.
Kingston, WA 98346
(360) 297-3035

Evergreen Safety Council
401 Pontius Ave. N.
Seattle, WA 98109
1-800-521-0778 or
(206) 382-4090

Section 1-10.3 is supplemented with the following:

1-10.3(2)F Signalized Intersections
(January 11, 2006 Tacoma GSP)

When construction operations are such that an existing traffic signal is required to be overridden to allow for traffic control measures, the signal shall be overridden only by a uniformed off-duty police officer.

All off-duty officers shall be commissioned within the State of Washington.

1-10.3(3)A Construction Signs
(January 11, 2006 Tacoma GSP)
The fifth paragraph is revised to read:

Signs, posts, or supports that are lost, stolen, damaged, destroyed, or which the Engineer deems to be unacceptable while their use is required on the project shall be replaced by the Contractor at their expense.

1-10.3(3)C Portable Changeable Message Sign
(August 4, 2010 Tacoma GSP)
This section is supplemented with the following:

Portable Changeable Message Signs shall be required on arterials streets where construction occurs for durations longer than seven (7) calendar days. Signs shall be solar charged and programmable. Signs shall be provided a minimum of seven (7) calendar days prior to construction and remain through the duration of the construction on the arterial street. Signs shall be provided on each end of the arterial street construction zone notifying oncoming traffic of the construction conditions. All costs associated with providing and maintain the signs for the required duration shall be included in the proposal item, “Project Temporary Traffic Control”, per lump sum

END OF SECTION

2-01 CLEARING, GRUBBING, AND ROADSIDE CLEANUP
(April 1, 2012 Tacoma GSP)

2-01.1 Description

The first sentence of the first paragraph is revised to read:

The Contractor shall clear, grub, and cleanup those areas contained within the "Clearing & Grubbing" limits indicated on the Plans.

This section is supplemented with the following:

Trees, stumps, shrubs, and brush located outside the Clearing & Grubbing limits shall be considered as part of "Clearing and Grubbing" when identified for removal on the Plans.

2-01.2 Disposal of Usable Material and Debris

The third paragraph is revised to read:

The Contractor shall dispose of all debris in accordance with Section 2-01.2(2).

2-01.3(1) Clearing

This section is revised to read:

1. Fell trees only within the area to be cleared.
2. Close-cut parallel to the slope of the ground all stumps to be left in the cleared area outside the slope stakes.
3. Close cut all stumps that will be buried by fills 5-feet or less in depth.
4. Follow these requirements for all stumps that will be buried by fills deeper than 5-feet:
    a. Close-cut stumps under 18-inches in diameter.
    b. Trim stumps that exceed 18-inches in diameter to no more than 12-inches above original ground level.
5. Leave standing any trees or native growth indicated by the Engineer.
6. Trim all trees to be left standing to the height specified by the Engineer, with a minimum height of eight (8) feet above sidewalk and fourteen (14) feet above the roadway surface. Neatly cut all limbs close to the tree trunk.
7. Thin clumps of native growth as the Engineer may direct.
8. Protect, by fencing if necessary, all trees or native growth from any damage caused by construction operations.

2-01.3(2) Grubbing

Revise item e to read:

Upon which embankments will be placed, except stumps may be close-cut or trimmed as allowed in Section 2-01.3(1) item 4.

END OF SECTION

2-03 ROADWAY EXCAVATION AND EMBANKMENT
(August 20, 2010 Tacoma GSP)

2-03.3(5) Slope Treatment

This section is deleted.

2-03.5 Payment

The pay item "Gravel Borrow, Incl. Haul" is revised to read:

"Gravel Borrow, Incl. Haul", per cubic yard.

The unit contract price per cubic yard for "Gravel Borrow, Incl. Haul" shall be full pay for all material, labor, and equipment to furnish, place, and compact the material.

END OF SECTION

2-07 WATERING
(August 3, 2009 Tacoma GSP)

2-07.3 Construction Requirements
The last sentence of the first paragraph is revised to read:

The Engineer may direct that the Contractor apply water during non-working hours such as evenings, weekends, or recognized holidays.

Section 2-07.3 is supplemented with the following:

2-07.3(1) Water Supplied from Hydrants
There is no guarantee that all fire hydrants will be available for use for cleaning, lining, or any other construction activities associated with this project. Prior to construction activities, it shall be the Contractor's responsibility to verify which hydrants will be available by contacting Tacoma Water. The Contractor shall use only those hydrants designated by Tacoma Water.

Water supplied from hydrants governed by Tacoma Water shall be used in strict compliance with the "Operating Procedures for the use of Water Division Hydrants" available at the Tacoma Water Permit Counter.

The Contractor shall obtain a Hydrant Permit prior to start of work by contacting the Water Permit Counter at (253) 502-8247, 2nd floor, Tacoma Public Utilities, Administrative Building, 3628 South 35th Street, Tacoma, WA 98409. A copy of the approved Hydrant Permit shall be submitted to the Engineer.

Contractor personnel shall be in possession of a valid Tacoma Public Utilities Hydrant Certification Card prior to obtaining a permit. If necessary, contractor personnel shall undergo training to receive the required certification. Contact the Water Permit Counter to set up training as necessary.

END OF SECTION

2-09 STRUCTURE EXCAVATION
(March 1, 2004 Tacoma GSP)

2-09.4 Measurement

This section is supplemented with the following:

Longitudinal Limits. For all storm and sanitary sewers the longitudinal measurement will be from center of manhole to center of manhole or to the inside face of catch basins and similar type structures.

The fourth paragraph is revised to read:

There will be no specific unit of measure for the excavation required for manholes, catch basins, grate inlets, and drop inlets.

The first sentence of the seventh paragraph is revised to read:

For pipelines the foundation level, as shown on Standard Plan SU-16, shall serve as the lower limit for measuring excavation.

2-09.5 Payment

The pay item for "Structure Excavation Class B", is revised to read:

"Structure Excavation Class B", per cubic yard.

The unit contract price for "Structure Excavation Class B" shall be full payment for all excavation, removal of water; storing, protecting and re-handling of suitable backfill material; backfilling of the trench, compaction of backfill, and all other work necessary for the construction of the sewer trench.

END OF SECTION

2-13 VEGETATION REMOVAL (******)

2-13.1 Description

This work shall consist of the removal and disposal of vegetation identified on the Plans.

2-13.2 Definition of Vegetation

A “tree” is defined as any self-supporting, woody perennial plant having a main stem (trunk) and which normally attains a height of at least ten (10) feet at maturity, usually with one (1) main stem or trunk and many branches.

A “shrub” is defined as any woody perennial plant which normally attains a height of less than ten (10) feet at maturity and which can be construed to have some landscape value.

“Brush” is defined as any perennial vegetation which normally attains a height of ten (10) feet or less at maturity, which is not maintained as part of a landscape feature, which is “volunteer” growth or which exists in a naturalized state. Examples include but are not limited to stands of blackberries and scotch broom.

2-13.3 Construction Requirements

All stumps not identified for removal shall be close-cut parallel to the slope of the ground.

All stumps identified for stump grinding shall be ground to eight inches below final grade.

Disposal of all debris shall be in accordance with Section 2-01.2(2).

2-13.4 Measurement

Trees shall be classified by the measured circumference at a point four and one-half (4-½) feet above average ground level. Trees that have several stems at the four and one-half (4-½) foot height will be considered a tree clump. The largest diameter single stem will be measured and will dictate the class rating. Only the largest, single stem in the clump will be utilized for measurement and payment.

Stumps shall be classified by the measured circumference at the highest point of the stump above the average ground level or a point four and one-half (4-1/2) feet above the average ground level, whichever is less.

Trees and stumps will be classified as follows:

Less than 12 inches	Class 0
12 inches up to but not including 36 inches	Class I
36 inches up to but not including 72 inches	Class II
72 inches up to but not including 127 inches	Class III
127 inches or more (Tree height greater than 30 feet)	Class IV
127 inches or more (Tree height of 30 feet or less)	Class V

Trees, stumps, and stump grinding will be measured per each for each class.

Shrubs will be measured per each.

Brush will be measured per square yard.

2-13.5 Payment

Payment will be made in accordance with Section 1-04.1.

“Remove Tree, Class__”, per each

“Remove Stump, Class __”, per each

“Stump Grinding, Class __”, per each

“Remove Shrub”, per each

“Remove Brush”, per square yard

The unit contract price shall be full pay to remove and dispose of the vegetative matter.

The unit contract price for “Remove Tree, Class 0” and “Remove Tree, Class I” shall include the removal and/or grinding of the stump as identified on the plans or as directed by the Engineer.

END OF SECTION

2-14 PAVEMENT REMOVAL
(March 17, 2003 Tacoma GSP)

2-14.1 Description

The work described in this section includes the removal and disposal of pavement surfaces identified on the Plans or as marked in the field.

2-14.2 Pavement Classification

Removal of pavement will be according to type and class based on composition and thickness, as defined below:

Type I Pavement removal where all or portions of the existing pavement is being removed in conjunction with street construction or any other removal not described below for Type II or Type III.

Type II Pavement removal required for the placing of utilities at greater and varying depths, such as sewers.

Type III Pavement removal required for narrow and shallow utility cuts in order to install light cables, conduits and similar shallow utilities.

Class A2 Class A2 pavement removal shall apply to the removal of asphalt concrete, bituminous road surfacing, multiple lift bituminous surface treatments or any combination of these components having an average thickness of two inches or less.

Class A4 Class A4 pavement removal shall apply to the removal of asphalt concrete, bituminous road surfacing, multiple lift bituminous surface treatments or any combination of these components having an average thickness between two inches and four inches.

Class A8 Class A8 pavement removal shall apply to the removal of asphalt concrete, bituminous road surfacing, multiple lift bituminous surface treatments or any combination of these components having an average thickness between four inches and eight inches.

Class C6 Class C6 pavement removal shall apply to all non-reinforced cement concrete pavements or slabs having an average thickness of six inches or less. After the curbs and pavement have been constructed, the Contractor may be required to remove additional sidewalk necessary to provide proper connections and grades, as determined by the Engineer.

Class C12 Class C12 pavement removal shall apply to all non-reinforced cement concrete pavements or slabs having an average thickness of between 6 inches and 12 inches.

Class CA Class CA pavement removal shall apply to all pavements that have a wearing surface of asphalt concrete upon a cement concrete pavement or, cement concrete base, and for which the total combined

thickness of the pavement averages between six inches and twelve inches.

Class H Class H pavement removal shall apply to early type pavement of a cement concrete base with a brick or cobblestone surface and potentially an additional layer of asphalt concrete pavement for which the total combined thickness of the pavement averages between ten inches and twenty inches.

2-14.3 Construction Requirements

All final meetlines shall be sawcut.

Where monolithic cement concrete pavement and curb are being removed, the curb removal shall be considered as pavement removal, and the measurement for payment will be to the back of the curb.

The removal of existing street improvements shall be conducted in such a manner as not to damage utilities and any portion of the improvement that is to remain in place. Any deviation in this matter will obligate the Contractor, at no expense to the Contracting Agency, to repair, replace, or otherwise make proper restoration to the satisfaction of the Engineer.

In the event a pavement averages more than the maximum thickness specified for its class, an additional payment will be made to cover the extra thickness removed by a proportional conversion into additional square yards.

2-14.4 Measurement

Pavement removal will be measured per square yard.

Type I pavement removal will be measured in its original position through the use of survey techniques.

2-14.5 Payment

Payment will be made in accordance with Section 1-04.1.

“Remove Existing Pavement, Type ___Class___”, per square yard

All costs associated with saw cutting meet lines shall be included in the unit contract price for pavement removal.

END OF SECTION

2-15 CURB AND CURB AND GUTTER REMOVAL
(March 17, 2003 Tacoma GSP)

2-15.1 Description

The work described in this section includes the complete removal and disposal of curbs and curb and gutter identified on the Plans or as marked in the field.

2-15.2 Curb Classification

Removal of curb and/or curb and gutter will be based on composition, as defined below:

Integral Curb - Integral curb shall consist of curb that is constructed monolithic with the adjacent cement concrete pavement.

Curb - Curb may consist of cement concrete curb, granite curb, or any other combination of rigid material that extends below the pavement surface elevation.

Extruded/Precast Curb - Extruded or precast curb may consist of asphalt or concrete extruded or precast curb that is installed on a pavement surface.

Curb and Gutter - Curb and gutter may be cement concrete, or a cement concrete curb with a brick gutter on a cement concrete base, or other combination of rigid material.

2-15.3 Construction Requirements

Integral curb removal shall consist of the removal of the curb and the integral base section under the curb. The removal shall be accomplished by sawcutting along the face of the curb.

The removal of the curb and/or curb and gutter shall be conducted in such a manner as not to damage utilities and any portion of the improvement that is to remain in place. Any deviation in this matter will obligate the Contractor, at no expense to the Contracting Agency, to repair, replace, or otherwise make proper restoration to the satisfaction of the Engineer.

2-15.4 Measurement

Curb and curb and gutter removal will be measured per linear foot.

2-15.5 Payment

Payment will be made in accordance with Section 1-04.1.

“Remove Integral Curb”, per linear foot

“Remove Curb”, per linear foot

“Remove Extruded/Precast Curb”, per linear foot

“Remove Curb and Gutter”, per linear foot

All costs associated with saw cutting necessary for the removal of curb and/or curb and gutter shall be included in the unit contract price for removal.

END OF SECTION

2-16 REMOVAL OF CATCH BASINS, MANHOLES, CURB INLETS, ETC. (March 17, 2003 Tacoma GSP)

2-16.1 Description

The work described in this section includes the complete removal and disposal of catch basins, manholes, and curb inlets as identified on the Plans.

2-16.2 Vacant

2-16.3 Construction Requirements

Where the structures are removed, the excavation shall be backfilled with native material if deemed suitable by the Engineer or imported backfill material.

Material determined by the Engineer to be unsuitable at the time of excavation shall be removed and replaced with imported backfill material. Payment will be made at the unit contract price of the item in the proposal, or as extra work under Section 1-04.4 if not included as an item in the proposal.

All pipe openings shall be plugged in accordance with 7-08.3(4).

The removal of the structures shall be conducted in such a manner as not to damage utilities and any portion of the improvement that is to remain in place. Any deviation in this matter will obligate the Contractor, at no expense to the Contracting Agency, to repair, replace, or otherwise make proper restoration to the satisfaction of the Engineer.

2-16.4 Measurement

The removal of catch basins, manholes, and curb inlets will be measured per each.

2-16.5 Payment

Payment will be made in accordance with Section 1-04.1.

"Remove Catch Basin", per each

"Remove Manhole", per each

"Remove Curb Inlet", per each

All costs associated with the placement and compaction of the backfill material shall be included in the unit contract price for removal.

END OF SECTION

3-04 ACCEPTANCE OF AGGREGATE
(April 1, 2012 Tacoma GSP)

3-04.1 Description

The first and third paragraphs are deleted.

The fourth paragraph is revised to read:

Nonstatistical evaluation will be used for the acceptance of aggregate materials.

3-04.3(1) General

The first sentence is revised to read:

For the purpose of acceptance sampling and testing, all test results obtained for a material type will be evaluated collectively.

3-04.3(4) Testing Results

This section is replaced with the following:

The results of all acceptance testing will be provided by the City's Project Engineer within 3 working day of testing.

3-04.3(6) Statistical Evaluation

This section is deleted:

3-04.5 Payment

In the second paragraph, the reference "Section 3-04.3(6)C " is revised to read "Section 3-04.3(8)".

END OF SECTION

4-04 BALLAST AND CRUSHED SURFACING (******)

4-04.2 Materials

This section is supplemented with the following:

Fine Aggregate Class 1	9-03.1(2)B

4-04.4 Measurement

This section is supplemented with the following:

Fine aggregate class 1 will be measured in the same manner prescribed for crushed surfacing materials.

4-04.5 Payment

This section is supplemented with the following:

"Fine Aggregate Class 1", per ton, or per cubic yard.

END OF SECTION

5-02 BITUMINOUS SURFACE TREATMENT (******)

5-02.5 Payment

This section is supplemented with the following:

Grinding existing pavement markings is included in the price for "Asphalt Emulsion (_____)." Grinding shall meet the requirements of Section 5-04.3(14).

END OF SECTION

5-04 HOT MIX ASPHALT
(April 1, 2012 Tacoma GSP)

5-04.2 Material

The second sentence of the third paragraph is revised to read:

If utilized, the amount of RAP shall not exceed 10-percent of the total weight of the HMA.

5-04.3 Construction Requirements

5-04.3(3) Hot Mix Asphalt Pavers

The second paragraph of this section is deleted:

5-04.3(3)A Material Transfer Device/Vehicle

This section is deleted:

5-04.3(5)E Pavement Repair

This section is revised to read:

Pavement repair shall be in accordance with the City of Tacoma Right-of-Way Restoration Policy found at www.govME.org.

Pavement repair consists of asphalt concrete sawcut, removing asphalt concrete pavement, crushed surfacing and subgrade, and installing Construction Geotextile for Separation, placing crushed surfacing top course over the Construction Geotextile, and HMA in accordance with the details shown in the Plans or as directed by the Engineer. Pavement repair excavation may also be performed by the use of a milling machine of a type that has operated successfully on work comparable with that to be done under the contract and shall be approved by the Engineer prior to use. If a milling machine is used for excavation, the excavation shall be as directed by the Engineer. In all types of excavation, after the removal of the asphalt, the base material will be evaluated by the inspector, to determine if it is suitable. If the base is determined not to be suitable, removal of the base material, per the typical details shown in the plans, shall be performed, and restoration will be per the typical detail, regardless of the method used for excavation.

The dimensions shown on the Plans for pavement repair are approximate and are provided for bidding purposes only. The actual dimensions to be used will be marked by the Engineer at the time of construction. Contrary to Section 1-04.6, no changes to the unit prices bid for the various items will be permitted due to any increase or decrease in the amount of pavement repair.

Payment for pavement repair shall be by the unit prices bid for Roadway Excavation, Incl. Haul, Remove existing pavement (for various pavement classes), Construction Geotextile, Crushed Surfacing Base Course, Crushed Surfacing Top Course, HMA Cl. ½ PG 64-22 and, specified herein.

5-04.3(7)A1 General

This section is supplemented with the following:

Verification of the mix design by the Contracting Agency is not required. The Contractor shall determine anti-strip requirements for HMA and provide data for anti-stripping.

The Contractor shall provide a mix design based upon 3 million ESAL's.

5-04.3(7)A2 Statistical or Nonstatistical Evaluation

This section is deleted:

5-04.3(8)A Acceptance Sampling and Testing – HMA Mixture

5-04.3(8)A1 General

The first paragraph of this section is revised to read:

Acceptance of HMA shall be as provided under nonstatistical or commercial evaluations.

The second and third paragraphs are deleted.

The fourth sentence of the fourth paragraph is deleted.

5-04.3(10) Compaction

5-04.3(10)B1 General

This section is revised to read:

HMA mixture accepted by statistical or nonstatistical evaluation that is used in traffic lanes, including lanes for ramps, truck climbing, weaving, and speed change, and having a specified compacted course thickness greater than 0.10-foot, shall be compacted to a specified level of relative density. The specified level of relative density shall be a Composite Pay Factor (CPF) of not less than 0.75 when evaluated in accordance with Section 1-06.2, using a minimum of 91.0-percent of the reference maximum density as determined by WSDOT FOP for AASHTO T 209. The specified level of density attained will be determined by the non-statistical evaluation of nuclear density tests taken on the day the mix is placed (after completion of the finish rolling).

Compaction tests will be performed at a minimum of 5 various locations, as determined by the Project Engineer, for each 400 tons placed. The locations will be determined by the stratified random sampling procedure conforming to WSDOT Test Method T 716. For an area in progress with a CPF less than 0.75, a new compaction sequence will begin at the Contractor's request after the Project Engineer is satisfied that material conforming to the Specifications can be produced. The Compaction Test Procedures will be with the Contractor by the Contracting Agency at the Pre-Construction Conference or a Pre-Paving Meeting, prior to the placement of HMA material on site.

HMA mixture accepted by commercial evaluation and HMA constructed under conditions other than those listed above shall be compacted on the basis of a test point evaluation of the compaction train. The test point evaluation shall be performed in accordance with instructions from the Project Engineer. The number of passes with an approved compaction train, required to attain the maximum test point density, shall be used on all subsequent paving.

HMA for preleveling shall be thoroughly compacted. HMA that is used for preleveling wheel rutting shall be compacted with a pneumatic tire roller unless otherwise approved by the Engineer.

Cores may be used as an alternate to the nuclear density gauge tests. When cores are taken by the Engineer at the request of the Contractor, the request shall be made by noon of the first working day following placement of the mix. The Engineer shall be reimbursed for the coring expenses.

At the start of paving, if requested by the Contractor, a compaction test section shall be constructed as directed by the Engineer to determine the compactibility of the mix design. Compactibility shall be based on the ability of the mix to attain the specified minimum density (91 percent of the maximum density determined by AASHTO T209). Following determination of compactibility, the Contractor is responsible for the control of the compaction effort. If the Contractor does not request a test section, the mix will be considered compactible.

HMA constructed under conditions other than listed above shall be compacted on the basis of a test point evaluation of the compaction train. The test point evaluation shall be performed in accordance with instructions from the Engineer. The number of passes with an approved compaction train, required to attain the maximum test point density, shall be used on all subsequent paving.

HMA for preleveling shall be compacted to the satisfaction of the Engineer.

5-04.3(10)B2 Cyclic Density

This section is deleted:

5-04.3(10)B4 Test Results

The first paragraph is revised to read:

The Project Engineer will inform the Contractor of field compaction test results as work is being performed. Formal Test Report(s) will be provided to the Contractor within 3 Working Days.

5-04.3(17) Paving Under Traffic

The second paragraph is supplemented with the following:

No traffic shall be allowed on any newly placed pavement without the approval of the Engineer.

5-04.5 Payment

Pay items for "Job Mix Compliance Price Adjustment" and "Compaction Price Adjustment" are deleted.

The section is supplemented with the following:

"HMA Cl. ½" PG 64-22 for Pavement Patch", per ton

The unit contract price for pavement patch shall be full pay for all labor, equipment, and materials required to complete the patching of the street, including joints, where required, and removal of temporary base.

"Cold Plant Mix for Temporary Pavement Patch", per ton

The unit contract price for "Cold Plant Mix for Temporary Pavement Patch" shall be full pay for all labor, equipment, and materials required to furnish and install; maintain; and remove and dispose of the temporary patch.

Temporary pavement patches placed between October 1st and March 31st shall be HMA Cl. ½" PG 64-22.

The pay item "HMA for Approach Cl. _PG " is revised to read:

"HMA for Approach Cl. ½" PG 64-22", per square yard

Excavation required for the construction of the approach shall be paid for under the unit contract price for "Roadway Excavation, Incl. Haul" when included in the proposal. Otherwise, the Contractor shall include all costs associated with excavating, including haul and disposal, regardless of the depth in the unit contract price per square yard for "HMA for Approach Cl. ½" PG 64-22".

The pay item "Anti-Stripping Additive" is revised to read:

This item will only be paid for when the addition of Anti-Stripping is directed by the Engineer.

5-04.5(1) Quality Assurance Price Adjustments

This section is deleted.

END OF SECTION

6-02 CONCRETE STRUCTURES

(******)

6-02.2 Materials

The section is supplemented with the following:

Coarse Aggregate AASHTO Grading No. 7 9-03.1(4)C

6-02.3 Construction Requirements

(February 16, 2011 Tacoma GSP)

6-02.3(2)B Commercial Concrete

This section is supplemented with the following:

Where concrete Class 3000 is specified for driveways, the Contractor may use commercial concrete.

(February 16, 2011 Tacoma GSP)

6-02.3(4) Ready-Mix Concrete

The first paragraph is revised to read.

All concrete shall be batched in a prequalified manual, semi-automatic, or automatic plant as described in Section 6-02.3(4)A.

(******)

6-02.4 Measurement

The section is supplemented with the following:

Coarse aggregate backfill, except when used as bedding for culvert, storm sewer, sanitary sewer, manholes, and catch basins, will be measured by the cubic yard in place determined by the neat lines required by the Plans.

(******)

6-02.5 Payment

The section is supplemented with the following:

“Coarse Aggregate Backfill for Wall”, per cubic yard.

END OF SECTION

7-02 CULVERTS
(April 1, 2012 Tacoma GSP)

7-02.2 Materials

This section is supplemented with the following:

All culvert pipe shall have a smooth interior wall.

END OF SECTION

7-04 STORM SEWERS
(March 17, 2003 Tacoma GSP)

This section is deleted. The requirements of Section 7-17 shall apply to storm sewers.

END OF SECTION

7-05 MANHOLES, INLETS, CATCH BASINS, AND DRYWELLS (March 23, 2010 Tacoma GSP)

7-05.1 Description

This section is supplemented with the following:

All references to sanitary sewers shall be construed to also mean storm sewers.

7-05.3 Construction Requirements

The first sentence of the eleventh paragraph is revised to read:

A flexible pipe-to-manhole connector shall be used in all connections of rigid and thermoplastic pipes to **new** precast concrete manholes to provide a watertight joint between the pipe and the manhole, unless otherwise directed by the Engineer. The connector shall be “Kor-N-Seal” with “Wedge Korband”(Type I or II as required for pipe diameter), manufactured by NPC, Inc., Milford, New Hampshire, or Engineer approved equal. The connectors shall be installed in accordance with the manufacturer’s recommendations.

7-05.3(1) Adjusting Manholes and Catch Basins to Grade

This section is revised to read:

7-05.3(1) Adjusting Utility Structures to Grade

Where shown in the Plans or where directed by the Engineer, utility structures shall be adjusted to grade as staked or as otherwise designated by the Engineer.

The materials and methods of construction shall conform to the requirements specified in Section 7-05.3 and Standard Plan No. SU-25. The finished structure shall conform to the requirements of the standard plan for the specific structure.

7-05.3(3) Connections to Existing Manholes

The first sentence is revised to read:

The Contractor shall inspect the existing manholes in the field to verify invert elevations and the scope of work necessary to make the connection(s) prior to construction.

7-05.4 Measurement

The sixth paragraph is revised to read:

Connections to existing structures will be measured per each.

This section is supplemented with the following:

Reconnecting existing sewer pipes to new manhole structures will be measured per each.

Manholes with Cast-in-Place Base will be measured per each.

Catch Basin Type 2 _____ in excess of 10 feet in height will be measured per linear foot for each additional foot of height over 10 feet. Measurement will be the distance from the flow line of the outlet pipe to the top of the manhole ring measured to the nearest foot.

7-05.5 Payment

The first paragraph is supplemented with the following:

The unit contract price for "Manhole_____" shall be full pay for all work required to furnish and install the new manhole to finished grade, including, but not limited to, excavating for, furnishing backfill, compaction of backfill, connection of new pipe(s), channeling, covers, frames, ladders, steps, and handholds, as applicable per Standard Plans.

The unit contract price for "Catch Basin____" shall be full pay for all work required to furnish and install the new catch basin to finished grade, including, but not limited to, excavating for, furnishing backfill, compaction of backfill, connection of new pipe(s), frame, cover, as applicable per Standard Plans.

The pay item for "Drop Manhole Connection" is revised to read:

"Drop Manhole Connection, ___-Inch Diam.", per each.

The pay item for "Connection to Drainage Structure" is revised to read:

"Connect New Sewer Pipe ___-In. Diam. to Existing Structure", per each

This section is supplemented with the following:

"Reconnect Existing Sewer Pipe, ___-In. Diam., to New Structure", per each.

The unit contract price per each shall be full pay for all labor, equipment and materials necessary to reconnect the existing sewer pipe to the new structure as specified in Section 7-05.3.

"Adjust Existing Catch Basin, Furnish New Frame and Grate", per each

The unit contract price per each for "Adjust Existing Catch Basin, Furnish New Frame and Grate" shall be full pay for all costs associated with adjusting the frame and grate to finished grade, including but not limited to, excavating, furnish and place backfill, furnishing and installing the new frame and grate, compacting, surfacing, and restoration.

"Adjust Existing Manhole, Furnish New Frame and Cover", per each

The unit contract price per each for "Adjust Existing Manhole, Furnish New Frame and Cover" shall be full pay for all costs associated with adjusting the frame and cover to finished grade, including but not limited to, excavating, furnish and place backfill, furnishing and installing the new frame and cover, compacting, surfacing, and restoration.

"Adjust Existing Valve Chamber to Grade", per each

The unit contract price per each for "Adjust Existing Valve Chamber to Grade" shall be full pay for all costs associated with the adjusting the valve chamber to finished grade, including but not limited to, excavating, furnish and place backfill, compacting, surfacing, and restoration.

"Adjust Vault", per each

The unit contract price per each for "Adjust Vault" shall be full pay for all costs associated with the adjusting the vault to finished grade, including but not limited to, excavating, furnish and place backfill, compacting, surfacing, and restoration.

"Manhole ___-In. Diam. Type ___, with Cast-in-Place Base", per each.

The unit contract price per each for "Manhole ___-In. Diam. Type ___, with Cast-in-Place Base" shall be full pay for all labor, equipment and materials required to furnish, excavate for, furnish and place backfill, compact, and install to finished grade the new manhole with a cast-in-place base, including, but not limited to, insuring proper support of existing main, channeling, connection of new pipe, covers, frames, ladders, steps, and handholds, as applicable per Standard Plans

"Catch Basin Type 2 Additional Height, __ In. Diam.", per linear foot.

END OF SECTION

7-07 CLEANING EXISTING DRAINAGE STRUCTURES
(March 23, 2010 Tacoma GSP)

7-07.3 Construction Requirements

Item three of paragraph two is revised to read:

3. If sediment and water from structures does not meet the conditions described in 1 or 2 above, the Contractor shall collect and dispose of all water used and all debris generated in cleaning operations. No cleaning water or debris shall be flushed downstream beyond the limits of the work.

END OF SECTION

7-08 GENERAL PIPE INSTALLATION REQUIREMENTS
(April 1, 2012 Tacoma GSP)

7-08.3 Construction Requirements

7-08.3(1)A Trenches

The tenth paragraph of this section is deleted. All dewatering requirements are found in section 8-01.3(1)C.

7-08.3(1)C Bedding the Pipe

This section is supplemented with the following:

Pipe bedding for sanitary and storm sewers shall be in accordance with City of Tacoma Standard Plan No. SU-16.

7-08.3(2)F Plugs and Connections

This section is supplemented with the following:

Rigid Couplings, manufactured by Romac Industries, Inc., or Engineer approved equal, shall be used at any pipe joint in which bell and spigot or fused joints are not used. Flexible couplings are not permitted, except for side sewer installation.

7-08.3(2)G Jointing of Dissimilar Pipe

This section is revised to read:

Dissimilar pipe shall be joined by use of rigid couplings manufactured by Romac Industries, Inc., or Engineer approved equal, except for side sewer installation.

7-08.3(3) Backfilling

The second paragraph is revised to read:

Pipe zone backfill material shall meet the requirements of Section 9-03.12(2). Recycled concrete shall not be used for pipe zone backfill.

The fourth paragraph is revised to read:

Backfill above the pipe zone shall be accomplished in such a manner that the pipe will not be shifted out of position nor damaged by impact or overloading. If pipe is being placed in a new embankment, backfill above the pipe zone shall be placed in accordance with Section 2-03.3(14)C. If pipe is being placed under existing paved areas, or roadways, backfill above the pipe zone shall be placed in horizontal layers no more than 12-inches thick and compacted to 95-percent maximum density. If pipe is being placed in non-traffic areas, backfill above the pipe zone shall be placed in horizontal layers no more than 12-inches thick and compacted to 85-percent maximum density. All compaction shall be in accordance with the Compaction Control Test of Section 2-03.3(14)D. Material excavated from the trench shall be used for backfill above the pipe zone, except that organic material, frozen lumps, wood, rocks, or pavement chunks larger than 6-inches in maximum dimension shall not be used. Material determined by the Engineer to be unsuitable for backfill at the time of excavation shall be removed and replaced with imported backfill material

meeting the requirements of Section 9-03.12(2). Material determined to be suitable for backfill at the time of excavation shall be stockpiled and used for backfill material. If the stockpiled material becomes unsuitable, the Contractor shall furnish suitable material in an amount equal to that, which became unsuitable, at no expense to the Contracting Agency.

7-08.5 Payment

The pay item for "Structure Excavation Class B" is revised to read:

"Structure Excavation Class B", per cubic yard.

The unit contract price for "Structure Excavation Class B" shall be full payment for all excavation, removal of water; storing, protecting and re-handling of suitable backfill material; backfilling of the trench, compaction of backfill, and all other work necessary for the construction of the sewer trench.

END OF SECTION

7-15 SERVICE CONNECTIONS

7-15.3 Construction Requirements

Section 7-15.3 is supplemented with the following:

(******)

7-15.3(2) Adjusting Meter Boxes to Grade

Where shown in the Plans or where directed by the Engineer, the existing meter boxes to remain on the project shall be adjusted to the grade of the surrounding paved or graded surface, as staked, or otherwise designated by the Engineer.

The existing Structure shall be raised or lowered to the required elevation. The materials and method of construction shall conform to the requirements specified above, and the finished Structure shall conform to the requirements of the Standard Plans except as approved by the Engineer.

(******)

7-15.4 Measurement

Section 7-15.4 is supplemented with the following:

Adjustment of meter boxes will be per each. No measurement will be made for adjusting new meter boxes installed as part of the Work.

(******)

7-15.5 Payment

Section 7-15.5 is supplemented with the following:

"Adjust Meter Box", per each.

The unit Contract price per each for "Adjust Meter Box" shall be full pay for all costs necessary to make the adjustment including restoration of adjacent areas in a manner acceptable to the Engineer.

END OF SECTION

7-17 SANITARY SEWERS

(April 7, 2010 Tacoma GSP)
7-17.1 Description
This section is supplemented with the following:

All references to sanitary sewer shall also mean storm sewers.

(April 7, 2010 Tacoma GSP)
7-17.2 Materials
The first paragraph is revised to read:

Pipe materials used for storm and sanitary sewers shall be as shown on plans. All references to PVC shall mean Solid Wall PVC Sewer Pipe. Profile Wall PVC will not be permitted.

(April 7, 2010 Tacoma GSP)
7-17.3(2)A General
The first paragraph is revised to read:

Sewers and appurtenances shall be cleaned and tested after backfilling by either exfiltration or low-pressure air method at the option of the Contractor, except where the ground water table is such that the Engineer may require the infiltration test.

(April 7, 2010 Tacoma GSP)
7-17.3(2)H Television Inspection
The first sentence is revised to read:

The Contracting Agency will video inspect all sanitary and storm sewers prior to paving where paving occurs over sewers, or prior to final acceptance.

(April 7, 2010 Tacoma GSP)
7-17.4 Measurement
This section is supplemented with the following:

Removal and replacement of unsuitable backfill material will be determined by the cubic yard in place, based on a neat line measurement.

Horizontal Limits: The horizontal limits shall be as defined in Section 2-09.4.

Longitudinal Limits: The longitudinal limits shall be as defined in Section 2-09.4.

Lower Limits: The lower limits shall be the top of the pipe zone as shown on Standard Plan No. SU-16.

Upper Limits: The upper limits shall be the subgrade elevation of the proposed roadway section or pavement patch section.

All costs associated with the disposal of material located above the upper limits shall be included in the unit contract price for other items of work, unless a proposal item is included for this specific item of work.

7-17.5 Payment

(April 7, 2010 Tacoma GSP)
The first paragraph is supplemented with the following:

"PVC Storm Sewer Pipe ___In. Diam.", per linear foot.

(******)
"Ductile Iron Storm Sewer Pipe ___In. Diam.", per linear foot.

(April 7, 2010 Tacoma GSP)
The second paragraph is revised to read:

The unit contract price per linear foot for sewer pipe of the kind and size specified shall be full pay for the furnishing, hauling, and assembling in place the complete installation, including but not limited to, disposal of material excavated within the pipe zone, furnishing and installing pipe bedding and backfill material within the pipe zone, and all wyes, tees, special fitting, joint materials, and other appurtenances necessary for the completion of the installation to the required line and grade, unless proposal items are included for these specific items of work.

(April 7, 2010 Tacoma GSP)
The pay item "Removal and Replacement of Unsuitable Material" is revised to read:

"Removal and Replacement of Unsuitable Material", per cubic yard.

The unit contract price per cubic yard for "Removal and Replacement of Unsuitable Material" shall be full pay for all work required to haul and dispose of the unsuitable material and the furnishing of suitable backfill material as specified in Section 7-08.3(3).

For the purpose of providing a common proposal for bidders, the proposal quantity for "Removal and Replacement of Unsuitable Material" is based on removal and replacement of all backfill material.

END OF SECTION

8-01 EROSION CONTROL AND WATER POLLUTION CONTROL (******)

8-01.1 Description

This section is supplemented with the following:

A copy of the City of Tacoma Stormwater Management Manual can be obtained by contacting Environmental Services at 253.591.5588.

8-01.3 Construction Requirements

8-01.3(1)A Submittals

This section is revised to read:

The Contractor shall prepare an implementation schedule for Stormwater Pollution Prevention Plan (SWPPP) in accordance with the City of Tacoma Surface Stormwater Manual (SWMM), Volume 2. The Contractor shall incorporate the SWPPP implementation schedule into the Contractor's progress schedule. The SWPPP and implementation schedule shall be submitted in accordance with 1-05.3 and 1-08.3.

The SWPPP is considered a "living" document that shall be revised to account for additional erosion control/pollution prevention BMPs as they become necessary and are implemented in the field during project construction. A copy of the most current SWPPP shall remain on-site at all times and an additional copy shall be forwarded to the Engineer. At the Contractor's preference, revisions to the SWPPP may be forwarded to the Engineer rather than submitting a complete document. Revisions to the SWPPP may be kept on-site in a file along with the original SWPPP document.

8-01.3(1)B Erosion and Sediment Control (ESC) Lead

This section is revised to read:

The Contractor shall identify the ESC Lead at the Preconstruction Meeting and the contact information for the ESC Lead shall be added to the Stormwater Pollution Prevention Plan (SWPPP) and the Temporary Erosion and Sediment Control (TESC) Plan. The ESC Lead shall have, for the life of the contract, a current Certified Erosion and Sediment Control Lead (CESCL) certificate or have a current Certified Professional in Erosion and Sediment Control (CPESC) certificate from a course approved by the Washington State Department of Ecology. The CESCL or CPESC shall be listed on the Emergency Contact List required under Section 1-05.13(1).

The CESCL or CPESC shall direct implementation of the measures identified in the SWPPP and as shown on the TESC plan. Implementation shall include, but is not limited to the following:

1. Installing and maintaining all temporary erosion and sediment control Best Management Practices (BMPs) included in the SWPPP and as shown on the TESC plan. Damaged or inadequate BMPs shall be corrected immediately.
2. Inspecting all on-site erosion and sediment control BMPs at least once every calendar week and within 24 hours of any discharge from the site. A SWPPP Inspection report or form shall be prepared for each inspection and shall be

included in the SWPPP file. A copy of each SWPPP Inspection report or form shall be submitted to the Engineer no later than the end of the next working day following the inspection. The report or form shall include, but not be limited to the following:

a. When, where, and how BMPs were installed, maintained, modified, and removed.
b. Observations of BMP effectiveness and proper placement.
c. Recommendations for improving future BMP performance with upgraded or replacement BMPs when inspections reveal SWPPP inadequacies.
d. Approximate amount of precipitation since last inspection and when last inspection was performed.

3. Updating and maintaining a SWPPP file on site that includes, but is not limited to the following:
   a. SWPPP Inspection Reports or Forms.
   b. SWPPP narrative.
   c. National Pollutant Discharge Elimination System Construction Stormwater General Permit (Notice of Intent).
   d. Other applicable permits.

Upon request, the file shall be provided to the Engineer for review.

8-01.3(1)C Water Management

This section is revised to read:

General. The Contractor is responsible for keeping excavations free from water during construction and disposing of the water in a manner that will not cause injury to public or private property, or to cause a nuisance to the public. The Contractor shall maintain dry working conditions at all times and under all conditions. Groundwater flowing toward or into excavations shall be controlled to prevent sloughing of excavation walls, boils, uplift, and heave in the excavation, and to eliminate interference with orderly progress of construction. While the excavation is open, the water level shall continuously be maintained at least two (2) feet below the working level. The control of groundwater shall be such that softening of the bottom of excavations, or formation of “quick” conditions or “boils” during excavation, shall not occur. The Contractor is responsible for all foundation material required due to lack of dewatering efforts.

Dewatering Requirements. The Contractor shall design, construct, and operate a properly functioning dewatering system to successfully construct this project. Dewatering shall be completed in accordance with the City of Tacoma’s Stormwater Management Manual (SWMM) and the Stormwater Pollution Prevention Plan (SWPPP) required in Section 8-01. The Contractor shall have on hand sufficient pumping equipment and machinery in good working condition for all emergencies, including power outage and flooding. The Contractor shall have on call at all times competent workers for the continuous and successful operation of the dewatering and monitoring systems.

Dewatering Plan. The Contractor shall submit a dewatering plan to the Engineer for review in accordance with Section 1-05.3 prior to the start of construction. Review of the dewatering plan submitted by the Contractor shall not relieve the Contractor from full responsibility for adequate design and performance of the system. The

Contractor shall be solely responsible for the proper design, installation, operation, maintenance, and failure of any component of the dewatering system for this Contract.

The dewatering plan shall include the following components:

1. System Components – Describe the method and equipment proposed for removing the groundwater from the excavation.
2. Treatment Method – Describe how any groundwater that is to be discharged to the City's sewer system will be treated to meet the applicable discharge limits included in this section.
3. Point of Discharge – Describe the point of discharge of the groundwater. The Contractor shall explore options of disposing groundwater to areas other than the sewer system, such as discharge to existing detention ponds, infiltration back into the trench, etc. Any discharges to private property will require written documentation from the property owner that this point of discharge is permitted. If the Contractor proposes to discharge to the City's sewer system, the Contractor shall provide all proposed points of discharge along the construction area.
4. Maintenance Plan – Describe how the designed system will be maintained over the course of the project.
5. Monitoring Plan – Describe how discharge will be monitored to ensure the groundwater meets all discharge requirements.
6. Special Approved Discharge (SAD) Permit Application – The Contractor shall apply for a SAD permit as part of the dewatering plan. No discharge of groundwater to the City's sewer systems will be permitted without obtaining this permit. The Contractor will not be responsible for any permit or discharge fees. The City Construction Manager will provide the SAD permit application to the Contractor after award of the contract.

Requirements for Groundwater Discharge to the Storm Sewer System.
Uncontaminated pumped groundwater is an allowable discharge to the stormwater system under TMC 12.08.080.

Requirements for Groundwater Discharge to the Sanitary Sewer System.
Prior to discharge of groundwater to the City's sanitary sewer system, at a minimum, sediment control BMPs must be employed. This may include pumping all water to baffled sedimentation tanks, and/or pumping the water through filtration devices for reduction of suspended solids. Groundwater discharges to the sanitary sewer system shall have 500 mg/L or less of Total Suspended Solids (TSS). TSS analysis may be completed by the City Laboratory. Expedited turnaround is available, if necessary.

In addition to the TSS Requirements, the water shall contain no visible oil sheen or chemical odors. The City will use the sedimentation tank(s) for visual inspection of oil sheens and/or odors. If the Contractor encounters any signs of oil within the soil or groundwater, including any sheen on the water, and/or any chemical odor in the water or soils, the Engineer shall be notified immediately and all discharges to the sanitary sewer system shall be stopped immediately.

In the presence of oil sheens and/or chemical odors, the Contractor shall test the groundwater prior to discharge for the following contaminants. All discharge to the City's sanitary sewer system shall not exceed the following maximum discharge limits:

Contaminant	Limit	Contaminant	Limit
arsenic	0.1 mg/l, total	lead	0.4 mg/l, total
cadmium	0.25 mg/l, total	mercury	0.05 mg/l, total
chromium	0.25 mg/l, hexavalent	nickel	1.0 mg/l, total
chromium	1.0 mg/l, total	silver	0.2 mg/l, total
copper	1.0 mg/l, total	zinc	2.0 mg/l, total
cyanide	0.2 mg/l free	BTEX	10 mg/l
cyanide	0.64 mg/l total	Benzene	0.5 mg/l
petroleum hydrocarbons (silica gel treated-hexane extractable material, SGT-HEM)	50 mg/l		

While discharging to the sanitary sewer system, the Contractor shall control the flow of water into the receiving line so that the capacity of the City's sanitary sewer system is not exceeded downstream of the discharge point as a result of the addition of the water. The Contractor may contact the Engineer to request pipe capacity information for the Contractor's proposed discharge points.

The Contractor shall also measure and record in cubic feet the total quantity of groundwater discharged to the sewer system. This can be done by metering the flow or calculating batch discharges based on the volume of sedimentation tanks. In accordance with the SAD permit, the Contractor shall report the discharge quantities with the associated TSS test results to the City.

8-01.3(6)B Quarry Spall Check Dam

This section is supplemented with the following:

The rock used to construct quarry spall check dams shall meet the requirements for quarry spalls, in accordance with Section 9-13.6.

8-01.3(6)D Wattle Check Dam

This section is supplemented with the following:

Wattles used to construct wattle check dams shall meet the requirements for wattles, in accordance with Section 9-14.5(5) and shall be installed in accordance with the Plans.

8-01.3(6)E Coir log

This section is supplemented with the following:

Coir logs and associated appurtenances shall meet the requirements for coir log, in accordance with Section 9-14.5(7) and shall be installed in accordance with the Plans.

8-01.3(7) Stabilized Construction Entrance

The third paragraph is revised to read:

When the contract requires a wheel wash in conjunction with the stabilized entrance, the details for the wheel wash and the method for containing and treating the sediment-laden runoff shall be included as part of the SWPPP and TESC Plan.

8-01.3(8) Street Cleaning

The second sentence is revised to read:

Street washing with water shall not be permitted.

8-01.3(9)C Straw Bale Barrier

The section is revised to read:

Straw bale barriers shall not be permitted.

8-01.3(9)D Inlet Protection

Replace the third paragraph of this section with the following:

When the depth of accumulated sediment and debris reaches approximately 1/3 the height of an internal device or 1/3 the height of the external device(or less when so specified by the manufacturer), or as designated by the Engineer, the sediment and debris shall be removed and disposed of per SWMM BMP C220 or as specified on the Plans or within the SWPPP.

8-01.3(10) Wattles

The fourth and fifth sentences are revised to read:

On gradually sloped or clay-type soils trenches shall be 3 to 5 inches deep. On loose soils, in high rainfall areas, or on steep slopes, trenches shall be 3 to 5 inches deep, or 1/2 to 2/3 the thickness of the wattle.

8-01.4 Measurement

The thirteenth paragraph is revised to read:

Seeding, fertilizing, liming, mulching, mowing, and soil binder or tacking agent will be measured in square yards by ground slope measurement or through the use of design data.

This section is supplemented with the following:

No specific unit of measurement shall apply to the lump sum item “Erosion Control”.

No specific unit of measurement shall apply to the lump sum item “Stormwater Pollution Prevention Plan (SWPPP)”.

No specific unit of measurement shall apply to the lump sum item “Dewatering Plan”.

8-01.5 Payment

This section is supplemented with the following:

"Erosion/Water Pollution Control", per lump sum

The lump sum contract price for "Erosion/Water Pollution Control" shall be full pay for all cost for labor, equipment, and materials to perform all work associated with erosion control/water pollution control. Work shall include, but not limited to, furnishing and delivery of required materials, installation and maintenance of temporary erosion and sediment control measures such as baffled sedimentation tanks, silt fence, wattles, coir logs, straw bale barrier, inlet protection, filtration systems, stabilized construction entrance, plastic covering, tire wash, street cleaning, and Special Approved Discharge (SAD) Permit and fees. It is the Contractor's responsibility to maintain, repair, and replace any and all erosion control measures and facilities as required to maintain compliance with the NPDES permit (if any) and Tacoma Municipal Code Section 12.08 for the entire duration of the Project.

"Stormwater Pollution Prevention Plan (SWPPP)", per lump sum

The lump sum contract price for "Stormwater Pollution Prevention Plan (SWPPP)" shall be full pay for all costs, including but not limited to, preparing, submitting, revising, and resubmitting revisions for the Stormwater Pollution Prevention Plan.

"Dewatering Plan", per lump sum

The lump sum contract price for "Dewatering Plan" shall be full pay for all costs, including but not limited to, preparing, submitting, revising, and resubmitting revisions for the Dewatering Plan.

"Dewatering," by force account as provided in Section 1-09.6.

All costs for labor, equipment, and materials required to perform any and all work associated with dewatering the trenches, including but not limited to installing, operating, maintaining, pumping, storing water, disposal, discharging, testing, and removing the dewatering system(s) to achieve completion of the work performed under this Contract shall be paid for under force account per section 1-09.6.

END OF SECTION

8-02 ROADSIDE RESTORATION

8-02.3 Construction Requirements

(******)

8-02.3(4) Topsoil

Revise first paragraph to read:

Topsoil shall be evenly spread over the lawn areas to a depth of 6-inches and over all plant bed areas to a depth of 1-foot. The soil shall be scarified to a depth of 1-foot prior to topsoil placement and all rocks in excess of 1-inches shall be removed prior to topsoil placement. After the topsoil has been spread, remove all large clods, hard lumps, and rocks 1-inches in diameter and larger, and litter shall be raked up, removed, and disposed of by the Contractor.

(******)

8-02.3(4)A Topsoil Type A

Revise to read:

ASTM D 5268, pH range of 5.5 to 7, a minimum of 4 percent organic material content; free of stones 1 inch or larger in any dimension and other extraneous materials harmful to plant growth.

Import Topsoil Source: Import topsoil or manufactured topsoil from off-site sources. Obtain topsoil displaced from naturally well-drained construction or mining sites where topsoil occurs at least 4 inches deep; do not obtain from agricultural land, bogs or marshes.

Topsoil Analysis: Furnish soil analysis by a qualified soil-testing laboratory stating percentages of organic matter; gradation of sand, silt, and clay content; cation exchange capacity; sodium absorption ratio; deleterious material; pH; and mineral and plant-nutrient content of topsoil.

Report suitability of topsoil for plant growth. State recommended quantities of nitrogen, phosphorus, and potash nutrients and soil amendments to be added to produce a satisfactory topsoil.

At a minimum, amend imported topsoil with 10 percent composted wood/clean green derivatives on a volumetric basis. Compost shall be screened through a ½-inch screen prior to incorporation with imported topsoil.

(******)

8-02.3(4)B Topsoil Type B

This section is deleted

(******)

8-02.3(4)C Topsoil Type C

This section is deleted

(April 13, 2006 Tacoma GSP)

8-02.3(5) Planting Area Preparation

This section is supplemented with the following:

All grades shall be maintained in the areas to be planted in a true and even condition. The contractor shall be careful not to disturb any of the existing or cut slopes. Where final grades have not been established, the areas shall be finish graded and all surfaces left in an even and compacted condition. The finished grade shall be such that after planting, the grade shall be flush with adjoining surfaces; positive drainage shall also be maintained.

(April 13, 2006 Tacoma GSP)

8-02.3(6) Soil Amendments

This section is supplemented with the following:

Recycled/compost material in accordance with Section 9-14.4(8) shall be blended with the specified topsoil at a ratio of 1/1 by volume.

(April 13, 2006 Tacoma GSP)

8-02.3(9) Pruning, Staking, Guying and Wrapping

This section is supplemented with the following:

Crossed or rubbing branches shall be removed providing the natural shape of the tree is preserved. Under no circumstances shall pruning be done prior to inspection and approval of plants by the Engineer. All cuts shall be made flush with the parent stem leaving no stubs. Pruning cuts shall be made in a manner to favor the earliest possible covering of the wound by callus growth. Cuts that produce large wounds and weaken the tree will not be acceptable.

Top growth removal to compensate for root loss shall not exceed one-third (1/3) of the top growth unless otherwise specified or directed by the Engineer. Cuts created 3/4 inch in diameter shall be treated with an approved tree wound dressing. All pruning shall produce a clean cut without bruising or tearing the bark and shall be in living wood where the wood can properly heal over.

Evergreens shall not be pruned, except to remove injured branches. The use of pole shears and/or hedge shears for pruning deciduous and evergreen trees will not be permitted. All trimmings and other debris left over from the planting operations shall be collected and disposed of off the site.

All evergreen trees and deciduous trees over 15 feet in height shall be guyed with three wires or cables.

All deciduous and evergreen trees shall be staked the same day of planting.

(April 13, 2006 Tacoma GSP)

8-02.3(10) Fertilizers

This section is supplemented with the following:

Fertilizer shall be supplied and applied in the form and rates indicated below:

Type of Fertilizer	Application Rate
Commercial-grade complete fertilizer of neutral character, consisting of fast- and slow-release nitrogen, 50 percent derived from natural organic sources of urea formaldehyde, phosphorous, and potassium.	1 lb./1,000 sq. ft. of actual nitrogen, 4 percent phosphorous, and 2 percent potassium, by weight at the rate recommended by the topsoil analysis.
Granular or pelleted slow-release fertilizer consisting of 50 percent water-insoluble nitrogen, phosphorus, and potassium	Slow-release fertilizer consisting of 50 percent water-insoluble nitrogen, phosphorus, and potassium at the rate recommended by the topsoil analysis.

(April 13, 2006 Tacoma GSP)
8-02.3(11) Bark or Wood Chip Mulch
The third sentence of the first paragraph is revised to read:

Mulch shall be feathered to plant material trunks, stems, canes, or root collars, and level with the top of junction and valve boxes, curbs and pavement edges.

This section is supplemented with the following:

Bark or wood chip mulch in accordance with Section 9-14.4(3) shall be applied to a depth of 4 inches at the location indicated on the Plans or as directed by the Engineer.

(April 13, 2006 Tacoma GSP)
8-02.3(13) Plant Establishment
This section is revised to read:

The Contractor shall maintain the planting areas and all plants planted within the project limits to ensure the resumption and continued growth of the planted material until physical completion of the contract.

Maintenance shall include, but not be limited to, labor and materials necessary for removal of foreign, dead, or rejected plant material, maintaining a weed-free condition, and the replacement of all unsatisfactory plant material planted under the contract.

Planting dates for replacement plant material will be approved by the Engineer.

The Contractor shall meet with the Engineer for the purpose of joint inspection of the project once installation has been completed and thereafter on a periodic “as needed” basis as determined by the Engineer, until the physical completion date of the contract.

All conditions unsatisfactory to the Engineer shall be corrected by the Contractor within a ten-day period immediately following the inspection. Failure to comply with corrective steps as outlined by the Engineer shall constitute justification of the Contracting Agency to take corrective steps and to deduct all costs thereof from any monies due the Contractor.

The Contractor shall replace all plants stolen or damaged by the acts of others until the physical completion date of the contract.

(April 13, 2006 Tacoma GSP)
8-02.3(14) Plant Replacement
This section is revised to read:

The Contractor shall provide the Contracting Agency a one (1) year non pro-rated, full labor and materials warranty for all planted material. The warranty shall cause the Contractor to remove and replace all rejected plant material during the warranty period. The warranty period shall begin at the date of physical completion of the contract and end one calendar year from that date.

The Contractor shall be responsible for growing or providing enough plants for replacement of all plant material rejected during the warranty period. All rejected plant material shall be replaced at dates approved by the Engineer.

All replacement plants shall be of the same species and quality as the plants they replace. Plants may vary in size reflecting one season of growth should the Contractor elect to hold plant material under nursery conditions for an additional year to serve as replacement plants.

Replacement plants will be subject to the original warranty provision as stated above.

8-02.3(16) Lawn Installation

(April 13, 2006 Tacoma GSP)
8-02.3(16)A Lawn Installation
The second paragraph is revised to read:

All seeding areas shall be seeded with the following mix:

Type of Seed	% by Weight
Perennial Rye Brightstar II	33%
Perennial Rye Catalina	33%
Perennial Rye Manhattan 3	33%

The rate of application shall be 12 lbs per 1,000 square feet.

The third paragraph is supplemented with the following:

Where no irrigation system is to be installed, the lawn shall be placed during the following period only:

March 1st – June 30th

September 1st - October 25

The fifth paragraph is supplemented with the following:

Topsoil shall be tilled to a depth of 6 to 8 inches.

The sixth paragraph is supplemented with the following:

On sloped areas, the sod strips shall be laid perpendicular to the flow of water.

(April 13, 2006 Tacoma GSP)
8-02.3(16)B Lawn Establishment
This section is supplemented with the following:

Lawn that is replaced shall be of the same mixture and grade as the surviving lawn.

(April 13, 2006 Tacoma GSP)
8-02.4 Measurement
This section is supplemented with the following:

Irrigation water used to establish vegetation will be considered included in the cost of plants.

(April 13, 2006 Tacoma GSP)
8-02.5 Payment
The pay item for "Plant Selection" is revised to read

"Plant Selection ___", per each.

Payment for "Plant Selection ___" shall be full pay for all materials, labor, tools, equipment and supplies necessary for weed control within planting areas, planting area preparation, fine grading, planting, cultivating, and clean-up for the particular items called for in the Plans until the physical completion date of the contract. A one (1) year plant warranty shall be included in the unit contract price.

The seventh, eighth, and ninth paragraph pertaining to partial payment are deleted.

The pay unit of square yards will be used in lieu of acres.

END OF SECTION

8-03 IRRIGATION SYSTEM
(March 1, 2004 Tacoma GSP)

8-03.3 Construction Requirements
The fourth paragraph is supplemented with the following:

All electrical work from the electrical source to the controller junction box must be completed by a licensed electrical contractor

8-03.3(5) Installation
The first sentence of the second paragraph is revised to read:

Final position of turf heads shall be level or ½ inch below finished grade measured from the top of the sprinkler.

The fourth paragraph is revised to read:

Final position of valve boxes, capped sleeves, and quick coupler valves shall be level with the finished grade or mulch.

This section is supplemented with the following:

The Contractor shall advise the Engineer at least 24 hours before pressure tests are to be conducted.

A zone diagram shall be posted in the controller to facilitate the selection of the valves to be operated.

END OF SECTION

8-04 CURBS, GUTTERS, AND SPILLWAYS

(******)

8-04.1 Description

This section is supplemented with the following:

This Work also includes the furnishing of precast concrete wheel stops at the locations shown in the Plans or where designated by the Engineer in accordance with these Specifications and in conformity to the lines and grades as staked.

(******)

8-04.2 Materials

This section is supplemented with the following:

Precast concrete wheel stops shall be 7-1/2" x 72" as manufactured by Granite Precasting & Concrete Inc., 4116 Bakerview Spur, Bellingham, WA 98226 or approved equal.

8-04.3 Construction Requirements

(March 1, 2004 Tacoma GSP)

8-04.3(1) Cement Concrete Curbs, Gutters, and Spillways

The first paragraph is revised to read:

Cement concrete curb, curb and gutters, gutters, and spillways shall be constructed with air entrained concrete Class 3000 conforming to the requirements of Section 6-02.

(March 1, 2004 Tacoma GSP)

Section 8-04.3 Construction Requirements is supplemented with the following:

8-04.3(1)B Integral Cement Concrete Curb

When integral curb is being constructed with the pavement, fresh concrete for the integral curb shall be placed at such time as will enable the top section of the curb to be consolidated, finished, and bonded to the pavement slab while the concrete is plastic.

Where curb is not being placed integral with the pavement slab, reinforcing steel dowels shall be placed in the base section for the curb in accordance with the standard drawing.

(March 1, 2004 Tacoma GSP)

8-04.3(6) Cold Weather Work

The following additional requirements for placing concrete shall be in effect from November 1 to April 1:

- The Engineer shall be notified at least 24 hours prior to placement of concrete.
- All concrete placement shall be completed no later that 2:00 p.m. each day.
- Where forms have been placed and the subgrade has been subjected to frost, no concrete shall be placed until the ground is completely thawed. At the time, the forms shall be adjusted and subgrade repaired as determined by the Engineer.

(******)
Section 8-04.3 is supplemented with the following:

8-04.3(7) Precast Concrete Wheel Stops

Precast concrete wheel stops shall be constructed with air entrained concrete Class 4000 conforming to the requirements of Section 6-02, and include reinforcing steel meeting ASTM A-615 Grade 60.

Precast concrete wheel stops shall have a minimum of two 5/8" diameter holes for fastening the wheel stops to the pavement. Wheel stops shall be fastened to the pavement using 1/2" deformed reinforcing steel or steel spikes. Void space shall be filled with non-shrink, epoxy grout.

8-04.4 Measurement

(******)
This section is supplemented with the following:

Precast concrete wheel stops will be measured per each.

8-04.5 Payment

(March 1, 2004 Tacoma GSP)
This section is supplemented with the following:

"Integral Cement Conc. Traffic Curb", per linear foot
"Extruded Curb Type _____", per linear foot.

(******)
This section is supplemented with the following:

"Precast Concrete Wheel Stop", per each.

END OF SECTION

8-12 CHAIN LINK FENCE AND WIRE FENCE (******)

8-12.3 Construction Requirements

8-12.3(1) Chain Link Fence and Gates

8-12.3(1)B Top Rail

The section's content including title is deleted and replaced with:

Top rails shall pass through the ornamental tops of the line posts, forming a continuous brace from end to end of each stretch of fence. Lengths of tubular top rail shall be joined by sleeve couplings. Top rails shall be securely fastened to terminal posts by pressed steel fittings or other appropriate means.

8-12.5 Payment

The second and third paragraphs are revised to read:

"Chain Link Fence Type A", per linear foot.

The unit Contract price per linear foot for "Chain Link Fence Type A" shall be full compensation for brace post installation and all other requirements of Section 8-12 for Chain Link Fence, unless covered in a separate Bid Item in this Section.

This section is supplemented with the following:

"Single 4 Ft. Chain Link Gate", per each.

END OF SECTION

8-14 CEMENT CONCRETE SIDEWALKS
(March 23, 2010 Tacoma GSP)

8-14.3 Construction Requirements

8-14.3(3) Placing and Finishing Concrete

The fourth paragraph is revised to read:

Curb ramps shall be of the type specified in the Plans. The detectable warning pattern shall have the truncated dome shape shown in the Standard Plans.

8-14.3(4) Curing

The second sentence is revised to read:

Curing shall be in accordance with Section 5-05.3(13).

Section 8-14 is supplemented with the following:

8-14.3(20) Cold Weather Work

The following additional requirements for placing concrete shall be in effect from November 1 to April 1:

- The Engineer shall be notified at least 24 hours prior to placement of concrete.
- All concrete placement shall be completed no later that 2:00 p.m. each day.
- Where forms have been placed and the subgrade has been subjected to frost, no concrete shall be placed until the ground is completely thawed. At the time, the forms shall be adjusted and subgrade repaired as determined by the Engineer.

8-14.3(21) Thickened Edge for Sidewalk

Thickened edge shall be constructed in accordance with the standard plan.

8-14.5 Payment

The pay item "Cement Conc. Sidewalk" is supplemented with the following:

All additional costs related to the construction of thickened edges, installation of backer rod, grinding heaved sidewalk panels, and adjustment of valve covers shall be included in the unit contract cost for "Cement Conc. Sidewalk".

The sixth paragraph is revised to read:

Excavation required for the construction of the sidewalk shall be paid for under the unit contract price for "Roadway Excavation, Incl. Haul" when included in the proposal. Otherwise, the Contractor shall include all costs associated with excavating, including haul and disposal, regardless of the depth in the unit contract price for "Cement Conc. Sidewalk" and/or "Cement Conc. Curb Ramp Type __".

END OF SECTION

8-20 ILLUMINATION, TRAFFIC SIGNAL SYSTEMS, AND ELECTRICAL (April 1, 2012 Tacoma GSP)

8-20.1 Description

8-20.2 Materials

This section is supplemented with the following:

The Contractor shall warranty all electrical and mechanical equipment and strain poles and streetlight standards for satisfactory in service operation for one year following project acceptance. Warranty shall include troubleshooting, labor, materials and all other costs to bring the equipment to a satisfactory level of service. Normal maintenance is not included in the warranty.

8-20.2(1) Equipment List and Drawings

The fourth paragraph is supplemented with the following:

The items submitted shall include, but not be limited to, the following:

- Streetlighting and traffic signal service panels
- Streetlighting and traffic signal cables
- Streetlight standards and anchor bolts
- Strain poles, including anchor bolts and strain clamps
- Mast arms
- Luminaires
- Photocells, lamps
- Compression connectors
- Vehicle and pedestrian signal heads and hardware
- Pedestrian push-button assembly
- Conduit and entrance fittings
- Junction boxes and lids
- Conductors, cable
- Span wire and dead ends

8-20.3 Construction Requirements

8-20.3(1) General

This section is supplemented with the following:

The Contractor shall call the day prior for inspection before covering any underground conduit or prior to installing any detection loops or pouring concrete for foundations. For inspections, notify Traffic Signal/Streetlighting at 591-5287.

Work shall be scheduled such that after the new signal is placed in operation, the Contractor shall remove any equipment not required for the operation of the new signal. Particular attention shall be given to immediately remove the old vehicle and pedestrian signal heads.

A uniformed police officer (may be off duty) shall be provided by the Contractor to direct traffic at any time the signal is not in normal operation. This work shall be included in the contract, and payment shall be included in the various unit prices.

The Contractor shall remove all existing and temporary signal heads and mounting hardware, poles, controllers, cabinets, flashing beacon, flasher control panel, and all other equipment as directed and delivered to the City of Tacoma Signal/Streetlight Shop located at 3401 South Orchard Street. Care shall be exercised in removing and salvaging electrical equipment. Any equipment damaged during removal, hauling, and stockpiling shall be repaired or replaced by the Contractor at no expense to the City. Any equipment not directed to be delivered to the City shall be removed and disposed of by the Contractor.

The Contractor shall schedule the work to minimize the outage between any existing lights and new lights. Where temporary lighting is required by the contract, the temporary lighting shall be installed and operational before the existing lighting is removed from service.

The Contractor shall notify the Engineer when the illumination system is ready for final inspection. The project will not be accepted until all the streetlights are working. The Contractor shall be responsible for maintenance of the system up until final acceptance by the City. This includes vandalism, defective lamps, ballasts, etc.

8-20.3(4) Foundations

This section is supplemented with the following:

Anchor bolts for streetlight standards and for strain poles shall extend a minimum of two threads and a maximum of six threads above the top heavy-hex-nut. A minimum of three threads shall remain between bottom of the leveling hex-nut and the top of the foundation.

Foundations shall be excavated using an auger and poured against undisturbed material unless otherwise approved by the Engineer. Vacuum excavation should be used where there is a possibility of conflict with utilities or other facilities. Forming the foundation with galvanized culvert pipe or similar forming methods will only be allowed when soil conditions or other factors make this method of construction necessary and is approved by the Engineer. In this case the following backfill requirements will apply. The area between the form and undisturbed material shall be filled with CDF. For lightly loaded installations, with approval of the Engineer, crushed surfacing top course may be used. Placement of this material must be compacted in the presence of the Engineer. Contractor will be responsible for all additional costs for forming foundations including any additional inspection time that may be necessary.

If backfilling is required, backfill material shall meet the requirements of Section 9-03.12(2) and Section 2-09.3(1)E of the Standard Specifications. Backfilling and compaction shall be accomplished in the presence of the Engineer.

8-20.3(5) Conduit

The third paragraph is deleted.

Subsection 1 of Paragraph nine is revised to read:

1. 18 inches below grade in the sidewalk area

The ninth paragraph is supplemented with the following:

Conduit under streets and commercial driveways shall be PVC Schedule 80 unless otherwise specified or directed by the engineer except when installed in a joint trench with power 36" deep, in which case PVC-40 will be acceptable.

Subsections 1, and 4 of Paragraph nine are deleted.

Subsection 4 of Paragraph thirty-one is revised to read:

4. The trench shall be of such width to allow the required conduit to be laid at the same elevation, parallel with one another, with a 3-inch separation between each conduit.

Subsection 5 of Paragraph thirty-one is revised to read:

5. Trenches located within the paved roadway shall be backfilled with 3 inches of sand over the conduit, followed by controlled density fill (CDF) meeting the requirements of Section 2-09.3(1)E. The controlled density fill shall be placed level to and at the bottom of the existing pavement. The pavement shall be replaced with paving material that matches the existing pavement.

The thirty-one paragraph is supplemented with the following subsection:

6. In all conduit trenches, utility warning tape shall be placed at twelve (12) inches below final grade.

CDF patching, mixing and placing may be started if weather conditions are favorable, when the temperature is at 34 degrees F and rising. At the time of placement, CDF must have a temperature of at least 40 degrees F. Mixing and placing shall stop when temperature is 38 degrees F and falling. Each filling stage shall be as continuous an operation as practicable. CDF shall not be placed on frozen ground.

Trench section to be filled with CDF shall be contained at either end of trench section by bulkhead of earth fill.

Contractor shall provide steel plates to span utility trenches and prevent traffic contact with CDF for at least 24 hours after placement or until CDF is compacted or hardened to prevent rutting by construction equipment or traffic.

The thirty-third paragraph is supplemented with the following:

Conduit terminating in pole foundations shall extend to 3 inches below the handhole.

Conduit terminating in controller foundations shall terminate 1 inch above the foundation.

The thirty-eighth paragraph is supplemented with the following:

Metallic marking tape shall be installed in all trenches.

The fourth and fifth sentences of the thirty-ninth paragraph are revised to read:

As soon as the mandrel has been pulled through, both ends of the conduit shall be sealed in an approved manner. A minimum size #14 AWG insulated solid copper wire pull line shall be installed in all empty conduits. At least three (3) feet of pull wire shall be double backed into the conduit at each termination and shall be tied off so that it cannot be inadvertently pulled out. All costs shall be included in the unit price bid for the conduit pay item.

8-20.3(6) Junction Boxes, Cable Vaults, and Pull boxes

The third paragraph is revised to read:

Adjustments involving raising or lowering the junction boxes shall require conduit modification if the resultant clearance between the top of the conduit and the junction box lid become less than 6-inches in accordance with Standard Plan TS-08.

This section is supplemented with the following:

Adjacent junction boxes shall be separated by a minimum of three-inches. Junction boxes shall be located a minimum of 12-inches from the edge of the sidewalk unless located adjacent to the back of curb.

8-20.3(7) Messenger Cable, Fittings

The second paragraph of this section is deleted.

This section is supplemented with the following:

Weather-resistant black PVC or black nylon cable ties shall be used to neatly secure the signal cable to the span wire at 10-inch centers and shall be tightened at top. Excess tie material shall be completely cut off. The conductors shall be below the span wire and shall be straight with no twisting or spiraling.

A minimum 5% sag shall be provided in the span wire when fully loaded with all vehicular signal heads, unless directed by the Engineer.

8-20.3(8) Wiring

The third paragraph is revised to read:

All splices in underground illumination circuits, induction loop circuits, and magnetometer circuits shall be installed at junction boxes. The only splice allowed in an induction loop circuit shall be the shielded cable to loop wire splice. The only splice allowed in a magnetometer circuit shall be the probe lead-in cable to magnetometer cable splice. Induction loop splices and magnetometer splices shall

be twisted, soldered, insulated with tape and properly sealed. Underground illumination circuit splices shall employ copper crimped connectors, approved by the Engineer, installed with an approved tool designed for the purpose, taped and properly sealed.

Splices and taps shall be made with solderless crimp connectors on underground and overhead circuits to securely join the wires both mechanically and electrically.

The fourth, eighth and ninth paragraphs are deleted.

The tenth paragraph is revised to read:

Fifteen (15) feet of slack cable shall be provided at the controller end of all cables terminating in the controller cabinet. A minimum of three (3) feet of slack cable shall be left at all strain poles and junction boxes.

The second and third sentences of the eleventh paragraph are deleted.

The twelfth paragraph is deleted.

The thirteenth paragraph is revised to read:

All loop lead-in wiring shall be tagged at the splice point and at the controller. All signal conductors shall be tagged at the controller cabinet, as directed by the Engineer, with a small permanent band bearing the circuit designation. A legend shall be furnished to the Engineer.

The fourteenth paragraph is supplemented with the following:

Drip loops shall have a minimum of 18 inches and a maximum of 24 inches, from the top of the loop to the bottom of the loop, of cable at the pole entrance and at the signal entrance fitting.

8-20.3(10) Service, Transformer, and Intelligent Transportation System (ITS) Cabinets

The second, third, and fifth paragraphs are deleted.

8-20.3(13) Illumination Systems

8-20.3(13)A Light Standards

The sixth and seventh paragraphs are deleted.

This section is supplemented with the following:

CONVENTIONAL BASE installation shall conform to the following:

The light standards shall be assembled and mounted complete on foundations perfectly straight and in good alignment. Proper leveling of the standards shall be accomplished by means of four leveling nuts that are to be employed with the anchor bolts. Standards shall be plumb within 1/50-inch per foot.

Luminaires shall be securely attached to the mast arm in a straight and level position. The luminaires shall be installed at a specified number of degrees from level if directed by the Engineer. After the poles are plumbed, grout shall be neatly placed between the pole base and the concrete. The Contractor shall form a 1/2-inch diameter weep hole in the grout. The nuts and bolts required for this foundation shall be furnished by the Contractor.

Streetlight standards including any illumination or traffic signal pole, or structure which extends more than 4 inches above finish grade, shall not be installed closer than three (3) feet from face of curb to the nearest part of the pole or structure and five (5) feet from fire hydrants and utility poles.

The metal ID tag is not required.

The painted light standard identification numbers shall be installed ten (10) feet above the base facing the traveled way. Numbers shall be 2 inch Series C.

Strength -- Each pole and mast arm shall have adequate strength for the designated luminaire with 1.8 safety factor for maximum combined stresses using 90 mph isotach (117 mph gusts) per AASHTO specifications for structure supports for highway luminaires. Design shall be based on total loading of 50 pounds and EPA of 2.0 square feet.

City of Tacoma Standard Bolt Spacing
30 Foot poles -- Baseplate shall accommodate 1 inch anchor bolts. The bolt circle shall be between 11 inches and 13 inches.
40 Foot Poles -- Baseplate shall accommodate 1 inch anchor bolts. The bolt circle shall be between 12.5 inches and 14.5 inches.

8-20.3(14) Signal Systems

8-20.3(14)A Signal Controllers

This section is revised to read:

All control cabinets and control equipment shall be furnished by the City unless otherwise specified. The Contractor's work will be limited to placing cabinets and equipment.

The Contractor shall be responsible for transporting the controller cabinet from the Signal/Streetlight Shop site to the jobsite, when notified by the Engineer, and for installation of the controller at the jobsite, as directed by the Engineer. The City of Tacoma will supply all necessary hardware to secure the controller cabinet to the foundation. City of Tacoma Public Works Department personnel will make all field wiring connections.

All costs for this work shall be included in the various pay items of the contract.

8-20.3(14)B Signal Heads

This section is supplemented with the following:

The red indications shall be leveled to within 1 inch for each direction as approved by the City. Height to bottom of lowest three section head shall be 17 feet plus or minus 3 inches. Height to the bottom of the lowest five-section head shall be a minimum of 16 feet and maximum of 16 feet 5 inches.

For span wire installation, the signal stem (drop pipe) shall normally be 1 to 3 feet long unless otherwise approved by the Engineer.

The pedestrian heads shall be mounted, as shown in the detail drawing.

8-20.3(14)C Induction Loop Vehicle Detectors

Subsections 2, 4, 9, and 10 are deleted.

8-20.3(17)B "As Built" Plans

This section is supplemented with the following:

These drawings shall show the routing of all underground conduits. The locations of the conduit shall be dimensioned with a precision and accuracy of 1 foot.

8-20.4 Measurement

This section is revised to read:

Measurement will be for the total of all bid items included in the proposal for a complete illumination and traffic signal system to be furnished and installed. Where no lump sum items are included in the proposal, the unit price items for the illumination and traffic signal systems will be the measurement for determining the total payment for these systems.

(******)

This section is supplemented with the following:

Measurement of Replace/Adjust Junction Box will be per each.

8-20.5 Payment

This section is supplemented with the following:

"Adjust Light Pole", per each.

The unit Contract price per each for "Adjust Light Pole" shall be full payment for all costs for removal and salvage of the existing pole, removal and disposal of the existing foundation, installing a new foundation, installation of the salvaged light pole, and reconnection of power for complete operation.

(******)

"Replace/Adjust Junction Box", per each.

The unit Contract price per each for "Replace/Adjust Junction Box" shall be full pay for removal of any damaged junction box, furnishing, installation, placement, and adjustment of junction box, and any necessary junction box accessories, excavation, backfill, and all other work necessary for the construction of junction box.

END OF SECTION

8-22 PAVEMENT MARKING

8-22.1 Description

(******)

The first paragraph of Section 8-22.1 is revised to read:

This Work consists of furnishing, installing, and removing pavement markings upon the Roadway surface and Curb and Gutter in accordance with the Plans, Standard Plans, the FHWA publication Standard Alphabet for Highway Signs and Pavement Markings and these Specifications, at locations shown in the Contract or as ordered by the Engineer in accordance with Section 1-04.4.

(March 3, 2008 Tacoma GSP)

The last sentence of the second paragraph is revised to read:

> Traffic letters used in word messages shall be 6-feet high with the exception of the "R" in the railroad crossing symbol which shall be as shown on the standard plans.

8-22.3 Construction Requirements

8-22.3(3) Marking Application

(******)

8-22.3(3)A Marking Colors

Section 8-22.3(3)A is supplemented with the following:

Curb painting shall be yellow, red, and white in color.

(March 3, 2008 Tacoma GSP)

8-22.3(4) Tolerances for Lines

The allowable tolerance for "Length of Line" is revised to read:

> **Length of Line:** The longitudinal accumulative error within a 32-foot length of skip stripe shall not exceed plus or minus 1 inch.

8-22.4 Measurement

(******)

The first paragraph of Section 8-22.4 is revised to read:

Center line, center line with no pass line, double center line, double lane line, edge line, solid lane line, dotted extension line, lane line, reversible lane line, curb paint, and two-way left-turn center line will be measured by the completed linear foot as "Paint Line", "Plastic Line", "Embossed Plastic Line", "Profiled Plastic Line", "Profiled Embossed Plastic Line", "Painting Curb", or "Grooved Plastic Line".

(March 3, 2008 Tacoma GSP)
The last sentence of the sixth paragraph is revised to read:

Crosswalk lines will be measured by the linear foot of marking installed.

8-22.5 Payment

(******)
This section is supplemented with the following:

"Painting Curb", per linear foot.

(March 3, 2008 Tacoma GSP)
This section is supplemented with the following:

"Painted Crosswalk Line", per linear foot.

"Plastic Crosswalk Line", per linear foot.

END OF SECTION

8-30 CEMENT CONCRETE STAIRWAY AND HAND RAILING
(March 17, 2003 Tacoma GSP)

8-30.1 Description

This work shall consist of constructing cement concrete stairways, and hand railings in accordance with details shown in the Standard Plans and these Specifications and in conformity to lines and grades shown in the Plans or as established by the Engineer.

8-30.2 Materials

Materials shall meet the requirements of the following sections:

Portland Cement	9-01
Aggregates	9-03
Premolded Joint Filler	9-04.1
Concrete Curing Materials and Admixtures	9-23
Reinforcing Bars	9-07
Paint	9-08

The concrete shall be air-entrained concrete Class 3000 in accordance with the requirements of Section 6-02.

Steel pipe hand railing shall be fabricated from standard weight steel pipe conforming to ASTM Designation A 120.

Wrought iron hand railing shall be fabricated from material conforming to ASTM A207-63T.

8-30.3 Construction Requirements

8-30.3(1) Excavation

Excavation shall be made to the required depth and to a width that will permit the installation and bracing of the forms. The foundation shall be shaped and compacted to a firm even surface conforming to the section shown in the Standard Plan. All soft and yielding material shall be removed and replaced with acceptable material.

8-30.3(2) Forms

Forms shall be of wood or metal and shall extend for the full depth of the concrete. All forms shall be straight, free from warp, and of sufficient strength to resist the pressure of the concrete without warping. Bracing and staking of forms shall be such that the forms remain in both horizontal and vertical alignment until their removal. After the forms have been set to line and grade, the foundation shall be brought to the required grade and thoroughly wetted approximately 12 hours before placing the concrete.

8-30.3(3) Placing and Finishing of Concrete

Front and side edging of stair treads shall be to a radius of 1/2 inch.

Landings for stairways shall be marked as specified for concrete sidewalks except that transverse and longitudinal markings shall be modified as necessary to result in uniform size of squares in each landing. Where gutters are along the side of stairways, the gutter portion of stairway landings shall be smooth finished without markings to conform with the stairway gutter.

8-30.3(4) Cold Weather Work

The following additional requirements for placing concrete shall be in effect from November 1 to April 1:

- The Engineer shall be notified at least 24 hours prior to placement of concrete.
- All concrete placement shall be completed no later that 2:00 p.m. each day.
- Where forms have been placed and the subgrade has been subjected to frost, no concrete shall be placed until the ground is completely thawed. At the time, the forms shall be adjusted and subgrade repaired as determined by the Engineer.

8-30.3(5) Curing

Cement concrete stairways shall be cured for a minimum of 72 hours in accordance with Section 5-05.3(13).

8-30.3(6) Hand Rail

Hand rails for cement concrete stairways shall be constructed at the locations shown on the Plans. The railing may be placed either completely assembled at the time when stairway concrete is placed, or recesses may be provided in the concrete for grouting in the railing posts after the concrete has been placed, finished and cured.

The installed railing shall be in true alignment, proper grade, and all posts plumb.

Welds shall be made by experienced welders and each weld shall be ground and buffed to a smooth surface.

8-30.3(6)A Hand Rail Painting

Painting shall meet the requirements of Section 6-07 of the Standard Specifications.

Paint shall be as follows:

- Primer shall meet requirements outlined in Section 9.08, “Formula A-6-68- Zinc Dust Zinc Oxide Primer,” of the Standard Specifications.
- Finish coat shall meet requirements outlined in Section 9.08, “Formula D-4-57 - Black Enamel,” of the Standard Specifications.

8-30.4 Measurement

Measurement of cement concrete stairway, and hand rail will be in accordance with City of Tacoma Standard Plan SU-10.

8-30.5 Payment

“Cement Conc. Stairway”, per linear foot.

The unit contract price per linear foot for “Cement Conc. Stairway” shall be full pay for all labor, equipment, and materials required for clearing and grubbing; excavation; subgrade preparation; construction of forms; furnishing and placing reinforcing steel; furnishing and placing of concrete in accordance with the plans and specifications.

“____ Hand Rail”, per linear foot.

The unit contract price per linear foot for “____ Hand Rail” shall be full pay for all labor, equipment, and materials, required to construct and complete the railing in accordance with the plan and specification.

END OF SECTION

9-03 AGGREGATES
(April 1, 2012 Tacoma GSP)

9-03.1 Aggregates for Portland Cement Concrete

9-03.1(1) General Requirements
The seventh paragraph is deleted

9-03.12 Gravel Backfill

9-03.12(3) Gravel Backfill for Pipe Zone Bedding
The grading requirements included in this section are revised to read:

Sieve Size	**Percent Passing**
3/4" Square	100
3/8" Square	95-100
U.S. No. 8	0-10
U.S. No. 200	0-3
Sand Equivalent	35 Minimum

9-03.21 Recycled Material

9-03.21(1) General Requirements
This section is supplemented with the following:

Recycled materials will only be permitted upon approval of the Engineer.

END OF SECTION

9-07 REINFORCING STEEL
(March 23, 2010 Tacoma GSP)

9-07.5(2) Corrosion Resistant Dowel Bars (For Cement Concrete Pavement)

This section is supplemented with the following:

Dowel bars for all streets shall be corrosion resistant.

END OF SECTION

9-08 PAINTS AND RELATED MATERIALS
(March 23, 2010 Tacoma GSP)

The following section is added:

9-08-20 Painting Surfaces Systems

The surfaces shall be painted in accordance with the type materials and exposures as identified in this section. The contractor shall provide the Engineer with a paint mil.

9-08-20(1) Steel

A. Exposed/outside exposure(non-galvanized)

1. Primer Coat	Section 9-08.1(2)C	(2.5-mils)
2. Intermediate Coat	Section 9-08.1(2)G	(3.5-mils)
3. Top Coat:	Section 9-08.1(2)H	(1.0-mils)

B. Exposed/Interior exposure(non-galvanized)

1. Primer Coat:	Section 9-08.1(2)C	(2.5-mils)
2. Intermediate Coat:	Section 9-08.1(2)G	(3.5-mils)
3. Top Coat:	Section 9-08.1(2)H	(1.0-mils)

C. Unexposed/interior & exterior (non-galvanized)

1. Primer Coat:	Section 9-08.1(2)C	(2.5-mils)

D. Exposed/interior & outside exposure(galvanized)

1. Primer Coat:	Section 9-08.1(2)E	(2.5-mils)
2. Top Coat:	Section 9-08.1(2)H	(1.0-mils)

E. Powder Coating and Galvanize Coating shall be applied where indicated in the contract documents. All other surfaces to be coated per 6-07.3.

F. Painting shall be applied in accordance with Section 6-07.3

9-08-20(2) Concrete

A. Exposed/outside exposure

1. 1st Cost:	Section 9-08.3	(3.0-mils)

B. Exposed/Interior exposure

1. 1st Cost:	Section 9-08.1(3)	(2.0-mils)
2. 2nd Cost:	Section 9-08.1(3)	(1.0-mils)

C. Surface to be painted where indicated on contract plans

D. Colors to be selected by the Project Engineer

9-08-20(3) Wood

All surfaces to be coated where and in accordance with contract documents as indicated.

END OF SECTION

9-28 SIGNING MATERIALS AND FABRICATION
(April 1, 2012 Tacoma GSP)

9-28.1 General
The second sentence of the first paragraph is hereby revised to read.

Permanent signs which measure 36 inches or less on a side and are mounted to be on a single post shall be constructed of single 0.080 inch aluminum panels.

The third sentence of the first paragraph is hereby revised to read.

Sign overlay panels shall be .050-inch aluminum.

9-28.9 Fiberglass Reinforced Plastic Signs
This section is deleted in its entirety.

END OF SECTION

9-29 ILLUMINATION, SIGNALS, ELECTRICAL
(April 1, 2012 Tacoma GSP)

9-29.1(6) Detectable Underground Warning Tape

This section is supplemented with the following:

For electrical circuits detectable underground warning tape shall be high visibility red, with continuous legend of “Caution Electric Line Buried Below” or words to that effect.

The warning tape shall be polyethylene with a metallic backing. The polyethylene shall be a minimum 3 inches wide, 4 mils thick

9-29.2 Junction Boxes, Cable Vaults and Pull Boxes

This section is supplemented with the following:

Regular Duty Junction Boxes

Regular Duty junction boxes are defined as Type B-9 (Standard Size-nominal 9 inch by 15 inch) and Type B-10 (Large Size nominal 12 inch by 22 inch). These junction boxes shall be rated for H10 traffic loading. Covers shall be dimensionally compatible with City of Tacoma junction boxes. Covers shall be steel or epoxy concrete. Legend shall be “Lighting” or “Streetlighting” or “Streetlight” or “Illumination” for boxes containing illumination circuits. Legend shall be “Traffic Signal” for boxes containing Traffic Signal Circuits. Lids shall be secured with penta head bolts. Hardware shall be brass, stainless steel, hot dipped galvanized, or equal.

9-29.3 Conductors, Cable

This section is supplemented with the following:

Where provisions of this section differ from the WSDOT standard specifications the following section will override the WSDOT standard specification. Where items are specified in the WSDOT standard specifications and are not overridden in this section than the provisions of the WSDOT Standard Specification will apply.

All cable shall be stranded copper unless otherwise noted in the Plans or in these Special Provisions.

The wire for service connection shall be as shown on the wiring detail. #6 USE-RHW shall be used for all service connections unless otherwise directed by the Engineer. Black conductor insulation shall be used for service. Neutral conductor shall be white. A minimum #8 AWG stranded copper conductor with a green insulation color shall be used on equipment ground. Color tape marking shall not be acceptable for equipment ground circuits or neutral conductor.

The cable for vehicle heads, pedestrian heads, and pedestrian push buttons shall be IMSA 20-1 #14 AWG 5 conductor stranded copper cable.

The cable for interconnect for underground installation shall be IMSA 39-2 #19 AWG 6 twisted pair, shielded, PVC outer jacket or IMSA 39-4 #19 AWG 6 twisted pair, figure 8, shielded, PVC outer jacket for overhead installation.

All illumination cable shall be stranded copper. Illumination cable in underground conduit shall be type RHW/USE. Illumination cable in light standards shall be #10 AWG USE or “pole and bracket” cable, as specified in Section 9-29.3 2Dof the Standard Specifications.

Bonding/equipment grounding conductors may be bare or insulated, and stranded. When pulled through a raceway it shall be insulated with Type XHHW or Type THWN and shall have continuous green color or green color with one or more yellow stripes. Insulated equipment grounding conductors shall be stranded copper.

Video detection conductor shall be a combination coaxial and power cable. The cable shall be ISOTEC X436755-00 (Kar-Gor Inc. Part # KG-9915) or approved equal.

9-29.3(2)F Detector Loop Wire

This section is revised to read:

The loop wire shall be IMSA 51-7, #14 AWG, encased in an orange colored HDPE jacket. Shielded loop lead-in wire shall be #18 stranded tinned-copper, twisted pair, 2 conductor cable with polyethylene insulation, conductors cabled, and shall have aluminum-polyester foil-shield furnished in 100% coverage, stranded tinned-copper drain wire and an overall chrome-vinyl jacket.

9-29.4 Messenger Cable, Fittings

This section is supplemented with the following:

Messenger cable shall be 5/16-inch, seven-wire strand messenger cables conforming to ASTM A 475, extra-high strength grade, 11,200 lbs. min. breaking strength, Class B galvanized.

All guy eye anchor rods shall be double-hub type.

This section is supplemented with the following:

Weatherheads shall be clamp-on type PVC. Where used for signal or flashing beacon conductors, the center of the wire entrance shall be cut or machined out to a large diameter to accommodate entry of multi-conductors. All edges shall be smoothed to avoid chaffing.

All miscellaneous nuts, bolts, washers and fittings shall be stainless steel or brass unless otherwise noted.

All metal line hardware shall be hot-dipped galvanized in conformance with the requirements of ASTM Designation A-153. All eyebolts shall be thimble eye design cast or welded to form a solid eye.

5-strand, class B galvanized steel, pretwisted guy strand dead ends, high strength cable conforming to ASTM Designation A-475, shall be utilized at all span wire terminations. 1/2" rope wire thimbles shall be required where span wire connects to

all poles or bull rings, except where thimble eye bolts are used. Span wire shall normally be installed directly pole to pole, unless otherwise directed or specified.

Strain insulators shall be installed where connecting to wood poles. Where span wire is connected to a steel or concrete pole, insulators shall not be installed. Strain insulators shall be wet process, porcelain, conforming to EEI-NEMA Class 54-2 standards for 12,000-pound ultimate strength and shall be installed 9 feet from the pole.

9-29.6 Light and Signal Standards

9-29.6(3) Timber Light Standards, Timber Strain Poles, Timber Service Supports
This section is supplemented with the following:

All timber poles shall be Class II unless otherwise specified.

Mast arms for wood poles shall be "tapered elliptical" or "tapered truss" style, of a size sufficient to be used with a luminaire weight of 48 pounds with an EPA of 1.1 square feet. Arms shall have 2-3/8 inches O.D. x 8-inch long slip fitter for mounting luminaire.

9-29.10 Luminaires

9-29.10(1) Conventional Roadway Luminaires
This section is supplemented with the following:

Photometrics
Unless otherwise specified, the light distribution shall be IES Type III, medium, cutoff.

Photometric Performance:

- **Flat lens** luminaires shall have a total downward **utilization greater than 65%.**
- **Drop lens** luminaires shall have a total downward **utilization greater than 70%.**

Photometric performance shall be verified with photometric report from an independent testing laboratory. Report should be submitted with the bid when requested. Failure to supply report within ten (10) working days of bid opening may be cause, at the City of Tacoma's discretion, for the bid to be considered non-responsive.

Ballasts
Ballasts shall be suitable for operation on 240 volt circuits unless otherwise stated.

150 watt luminaires shall be 55 volt design.

Each **luminaire shall have fuses** and fuseholders for each power conductor above ground potential. Fuses shall be 1.0 cm X1.8 cm (13/32" X 1.5"). Fuses shall be slow blow type (carry 110%, open at 135% within 1 hour, carry 200% for minimum of 10 seconds). Luminaires 250 Watts and below shall have 5 amp fuses. Luminaires above 250 watts shall have 10 amp fuses BUSS FNM series or equal.

Luminaires shall have receptacle for ANSI standard twistlock **photoelectric controls**. For 240 volt luminaires the photocell shall be wired for 240 volts.

9-29.11 Control Equipment

9-29.11(2) Photoelectric Controls

This section is revised to read:

The photoelectric control shall be the twistlock type and the light sensitive element shall be a solid state photo diode. The control shall be designed to turn on at 2.6 foot-candles (+/- 20%) and turn off at 2.6 foot-candles (+/- 20%). The lighting control shall not drift by more than 1 per cent over a 10-year period.

The output control relay shall be electro-mechanical. The time delay for both turn on and turn off shall be a minimum of one second and maximum of 5 seconds. The output relay shall be rated 1000 watts incandescent or 15 amps inductive load. The contacts shall be normally closed.

The lighting control shall have a built in metal oxide varistor (MOV) rated a minimum of 160 joules for lightning and transient protection. The control shall also have secondary zener diode and transient filter. The relay shall be suitable for operation on 240 volt, 60 hertz electrical circuits.

Dimensions shall conform to ANSI specifications for twistlock photocells

9-29.12 Electrical Splice Materials

9-29.12(1) Illumination Circuit Splices

This section is revised to read:

Splices and taps shall be made with solderless crimp connectors on underground and overhead circuits to securely join the wires both mechanically and electrically. Splices in above grade handholes shall be taped and varnished followed by a second layer of tape and electrical varnish. Spices below grade and at-grate handholes shall be double taped and varnished or insulated with epoxy resin as detailed in this section.

9-29.12(2) Traffic Signal Splice Materials

This section is revised to read:

Lead-in cable to loop wire or magnetometer sensing probe splices shall be as specified in Section 8-20.3(8).

9-29.13 Traffic Signal Controllers

This section is deleted.

The vacant Section 9-29.14 is replaced with the following:

9-29.14 Traffic Signal Strain Poles, Mast Arms and Pedestals

Steel Strain Poles

1. Each pole shall be engineered to conform with the latest AASHTO Standard Specifications for Structural Supports for Highway Signs, Luminaires and Traffic Signals.

2. Material and workmanship shall conform to the best commercial standards of the industry.

3. Construction Requirements

   a. Material Specifications:

Plates and Shapes	ASTM A572 Gr. 50
Shafts	ASTM A572 Gr. 50 (with a maximum silicon content of 0.04%)
Pipes	ASTM A53 Gr. B
Connection Bolts	ASTM A325
Anchor Bolts	ASTM A449
Galvanizing	ASTM A123 and A153

   b. Design

   1) Each pole shall be of tapered round or octagonal construction.
      - CLASS 1 POLE: Design for dead load tensions up to 1500 pounds
      - CLASS 2 POLE: Design for dead load tensions up to 2600 pounds

      Refer to project plans and specifications for required pole class(es).

   2) Class 1 poles shall have a minimum base diameter of 12-inches for octagonal poles and 12-1/4-inches for round poles. Poles shall have a minimum wall thickness of 0.3125-inches. Anchor bolts shall be 1-1/2-inch by 60-inches and shall have a spacing of 11-5/16-inches on center, on the square. It is the responsibility of the pole manufacturer to maintain proper clearance between the pole shaft and nuts for the anchor bolts.

   3) Class 2 poles shall have a minimum base diameter of 13-1/2-inches for octagonal poles and 14-inches for round poles. Poles shall have a minimum wall thickness of 0.375-inches. Anchor bolts shall be 2-inch by 66-inches and shall have a spacing of 12-3/4-inches on center, on the square. It is the responsibility of the pole manufacturer to maintain proper clearance between the pole shaft and nuts for the anchor bolts

   4) Poles shall be of single-ply construction. Multiple-ply poles shall not be allowed.

   5) Each pole shall be of tapered round or octagonal construction. Pole taper shall be in the range of 0.13 to 0.14 in/ft.

   6) A base plate and top casting shall be securely attached to each pole. The attachment of the base plate to the pole shall be a welded connection

sufficient to develop the full strength of the pole. The base plate shall have four (4) holes which will sufficiently accommodate the specified anchor bolts for the pole class.

Each pole shall include the following:

(a) One (1) rain-tight pole cap.

(b) One (1) 4-inch by 6-1/2-inch handhole at base end with cover plate opposite to mast arm.

(c) Anchor bolts shall be hot dipped galvanized steel with two (2) galvanized nuts and two (2) washers for each bolt. Only 12-inches of threaded end of the bolts must be galvanized. 1-1/2-inch diameter bolts shall have 8-inches of top thread and 2-inch diameter bolts shall have 10-inches of top thread.

Anchor bolts shall have threaded bottom ends to receive an anchor plate and nut. The nut shall be tack-welded to the anchor plate. Anchor plates for 1-1/2-inch diameter anchor bolts shall be 4-inch square by 1-inch thick. Anchor plates for 2-inch diameter anchor bolts shall be 6-inch square by 1-inch thick

(d) One (1) adjustable strain clamp to be mountable between 26 to 28 feet above the base. Clamp shall provide facility to attach span wire at four-quarter points.

(e) Provisions for mounting a mast arm of specified length.

All poles shall be supplied with one mast arm mounting flange. The centerline of the flange shall be approximately 6 inches below the top of 38-foot poles and 24 inches below the top of 30-foot poles. The flanges shall conform with the detail drawing included in the Special Provisions.

Poles ordered without mast arms but with provisions for a later addition of a mast arm shall be provided with a metal cover and gasket to protect the opening being provided. The cover shall be bolted to the pole using the holes provided for fastening the mast arm.

(f) One (1) two-inch coupling to receive clamp-on type aluminum weatherhead positioned at 27 feet, and no more than 45° from the location of the mast arm, unless otherwise specified.

(g) One (1) 1-1/4-inch coupling for wire inlet located directly opposite the mast arm.

(h) One (1) grounding lug-hole in lip of handhole for 1/2-NC brass bolt.

4. Strength and Deflection Requirements

Span wire shall be installed to sag an amount equal to 5% of the span length.

The maximum acceptable deflection, at 30 feet above the base, is 5 inches. The specified deflection shall be at a loading condition of 1,500 pounds horizontal pull at 30 feet above the base for Class 1 Poles. For Class 2 Poles, the loading condition shall be 2,600 pounds horizontal pull at 30 feet above the base.

5. Mechanical Requirements

a. Galvanizing

Structural material shall be zinc-coated by a “hot-dip” process in accordance with ASTM A123 and the final coating shall measure 0.0039 inch or more in thickness as determined by a magnetic thickness gauge. All tapped holes shall be chased after galvanizing. Hardware shall be coated in accordance with ASTM A307.

b. Defects

The finished pole shall be reasonably straight and free from injurious defects. If galvanizing is damaged, the maximum area to be repaired is defined in accordance with ASTM A123 Section 4.6. The maximum area to be repaired in the field shall be determined in advance by the Engineer. Repair areas damaged during construction, handling, transport or installation by one of the approved methods in accordance with ASTM A780 whenever damage exceeds 3/16 inches in width. Minimum thickness for repair shall measure 0.0039 inches.

6. Instruction and Guarantee

The company shall furnish the purchaser with template prints showing spacing and size of holes in base for the anchor rods.

The material shall carry the manufacturer’s standard guarantee against any defect in material or workmanship for a minimum period of one year following the date of installation. The Contractor shall submit mil test reports for all steel used in the manufacturing of strain poles and pedestals.

The Contractor shall submit a Certificate of Compliance with ASTM Standards and Specifications for galvanizing. The certificate, signed by the galvanizer, shall detail galvanizing process and testing procedure to determine that galvanizing meets minimum thickness specified.

The contractor shall submit welder certification. Welders must be certified to AWS standards.

Mast Arms

1. Each mast arm shall have sufficient strength with a 1.8 safety factor to support a 70-pound luminaire on an 18-foot mast arm per the latest AASHTO Specifications for Structural Supports for Highway Signs, Luminaires and Traffic Signals.

2. Material and workmanship shall conform to the best commercial standards of the industry.

Mast Arms for Concrete, Steel and Aluminum Poles

1. Material: The mast arm and its fastening shall be constructed of steel conforming to Section 9-29.14.A3.

2. Design

    a. Purpose

        The purpose of this specification is to describe the minimum acceptable standards of design and construction of galvanized steel mast arms intended for mounting on galvanized steel strain poles.

    b. General

        1) Each mast arm shall support a ballast-in-head luminaire and shall provide a luminaire mounting height of approximately two (2) feet above the strain pole mounting flange.

        2) The mast arm shall provide a horizontal extension from the center of the pole to the center of the luminaire as shown in the Plans.

    c. Construction

        1) The mast arm shall be of tapered construction. The luminaire end of the mast arm shall not exceed 2.375 inches O.D. for a minimum distance of 8 inches. The outside arm diameter at the pole flange shall not exceed 5.88 inches.

        2) The mast arm shall be capable of being fastened to the mast arm mounting flange dimensioned in the detail drawing. All mounting bolt heads shall clear the weld.

Traffic Signal Pedestals

The traffic signal pedestal design shall conform to the WSDOT Standard Plan J-7A, Type I with pole cap.

9-29.15 Flashing Beacon Control

This section is deleted:

9-29.16 Vehicular Signal Heads, Displays, and Housing

9-29.16(2)B Signal Housing

The second paragraph is supplemented with the following:

The door shall open a minimum of 160 degrees.

The third paragraph is supplemented with the following:

The sections shall be held firmly together by corrosion-resistant hardware in such a manner that additional sections may be added easily.

The fourth paragraph is supplemented with the following:

The terminal strip for a standard three-section head shall be a minimum five-position, ten-terminal, barrier-type strip with No. 8 screw-type fasteners. To one side of each terminal shall be attached the white, red, yellow and green signal section leads, leaving the opposite terminal for field wires. Multi-section heads shall be provided with a terminal strip located in the yellow (center) section. lead shall be No. 18 AWG type with 1/32-inch wall, 105-1/4 centigrade thermoplastic insulation.

9-29.16(3) Polycarbonate Traffic Signal Heads

This section is deleted.

9-29.17 Signal Head Mounting Brackets and Fittings

This section is revised to read:

Vehicle and pedestrian signal heads shall be as detailed in the standard plans.

Span wire vehicle signal hanger hardware shall consist of span wire clamp, balance adjuster, wire entrance fitting and vehicle head locking device.

A. Construction

1. Bronze hangers are required.
2. The minimum size of pins shall be 5/8-inch diameter. Pins shall be stainless steel.
3. The minimum size of the 'J' or 'U' cable clamps is 1/2-inch diameter. Cable clamp bolts shall be stainless steel. Clamping insert shall be used.
4. The cable saddle shall be at least 9 inches long.
5. All cotter pins shall be brass and washers shall be stainless steel.
6. All hardware shall be of stainless steel, bronze or brass materials.
7. Signal stem shall be locked with a square headed set screw 1/4-inch minimum in diameter.
8. Wire entrance shall be a minimum of 1-1/4-inch diameter and shall have a female threaded base for nipple.
9. The balance adjuster directional lock shall be of the clamping type with 1/2-inch through bolt for locking. No set screw or lock nut acceptable.
10. All stems shall be secured to signal head with proper lock fitting.

Vehicle signal heads attached to a mast arm shall use a type M mounting bracket as detailed in the standard plans and in accordance with Section 8-20.3(14)B and Section 9-29.17.

9-29.18 Vehicle Detector

This section is deleted.

9-29.19 Pedestrian Push Buttons

This section is deleted.

[Note to Engineer: Engineer shall develop specifications for review by the Engineering Division/Transportation Section.]

9-29.20 Pedestrian Signals

The first paragraph is revised to read:

Pedestrian signals shall be LED, modular type with "Z-crate" style visors. The pedestrian indications shall be international symbol type conforming to the requirements of the Federal Highway Administration.

Subsection B. (3) of the second paragraph is revised to read:

Housing shall be green die-cast aluminum unless otherwise specified and the aluminum housing shall be painted with two coats of factory applied traffic signal green enamel (Federal Standard 595). All hinges and latches and interior hardware shall be stainless steel.

Section 9-29 is supplemented with the following:

9-29.24 Service Cabinets

9-29.24(2) Electrical Circuit Breakers and Contactors

The third sentence of the third paragraph is hereby deleted.

END OF SECTION

END OF SPECIAL PROVISIONS

APPENDIX A

CITY OF TACOMA

AND

WSDOT STANDARD PLANS

NOTES:

THE CONTRACTOR WILL PROVIDE NECESSARY CONTROL POINTS REQUIRED DURING PRELIMINARY SPOTTING FOR PAINT STRIPE, STOP BARS, LEGENDS, CROSSWALKS, TRAFFIC ARROWS, AND SIGNS. CROSSWALK BARS TYPICALLY ALIGN WITH LANE LINES AND MID–LANE, PLACED TO AVOID WHEEL PATH. CROSSWALK BARS SHALL BE PARALLEL TO THE LANES' DIRECTION OF TRAVEL. DISTANCE MEASURED FROM THE CENTER OF A PAIR OF BARS TO THE NEXT PAIR OF BARS SHALL BE 5' TO MAX OF 5'–6" DEPENDENT ON LANE WIDTH.

TYPICAL STOP BAR WIDTH IS 12".

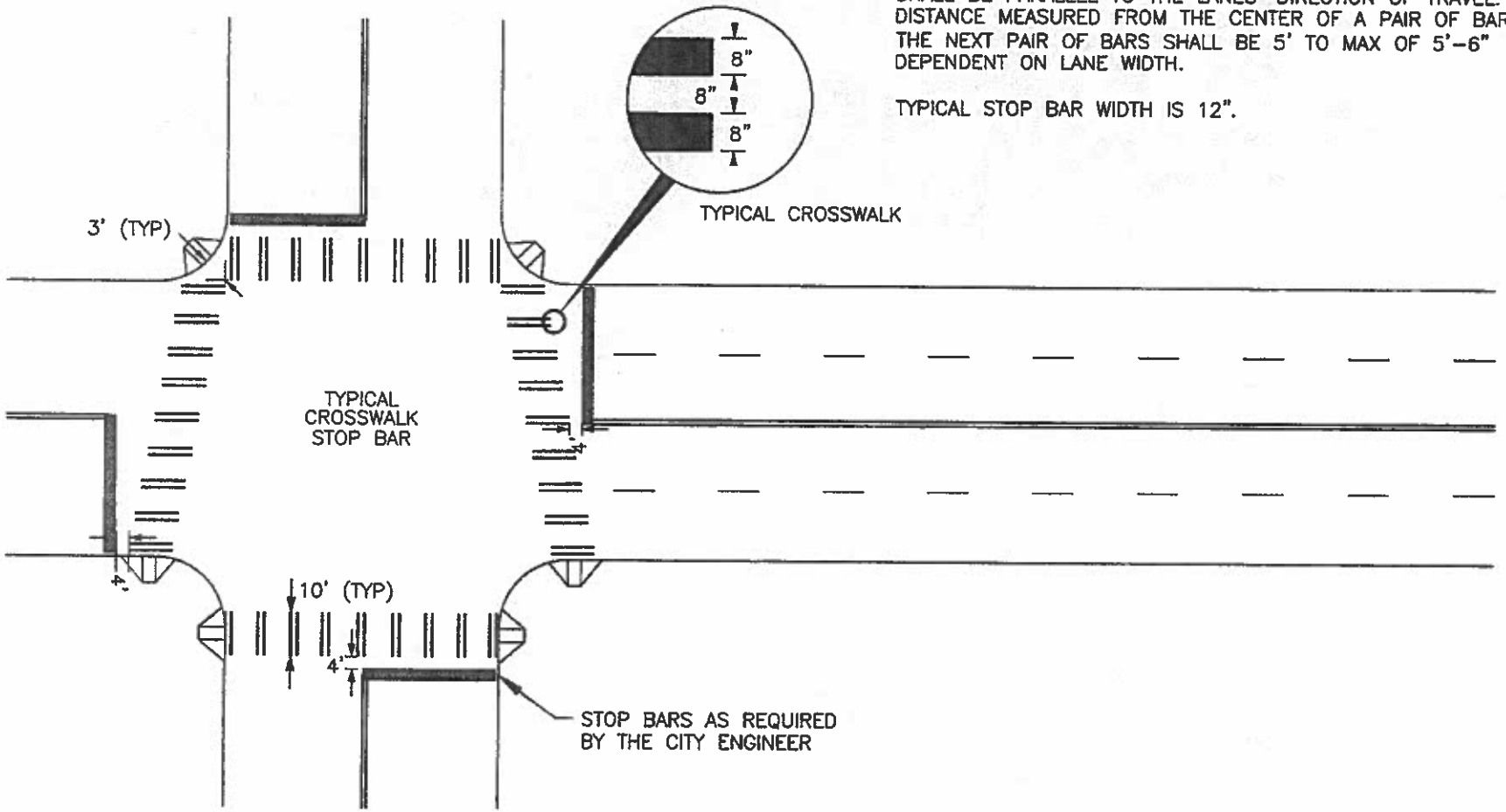

CITY OF TACOMA **DEPARTMENT OF PUBLIC WORKS**	**APPROVED FOR PUBLICATION** CITY ENGINEER DATE	**CROSSWALK AND STOP BAR LAYOUT FOR 90° CURB RAMPS** **STANDARD PLAN NO. PM-02**

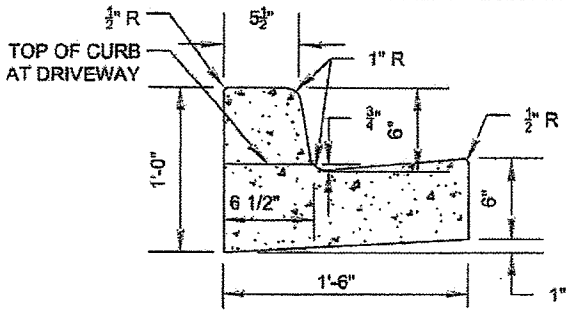

CEMENT CONCRETE TRAFFIC CURB & GUTTER

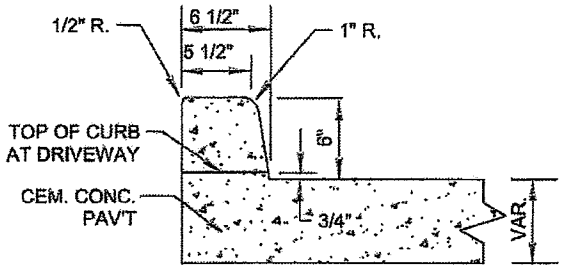

INTEGRAL CEMENT CONCRETE TRAFFIC CURB

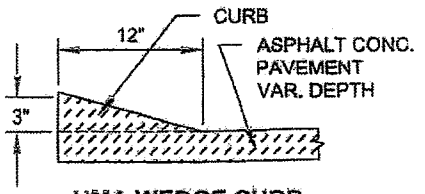

HMA WEDGE CURB STANDARD

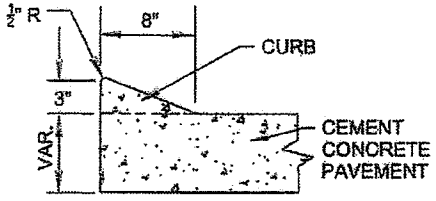

TYPE "C" MOUNTABLE INTEGRAL CEMENT CONCRETE CURB

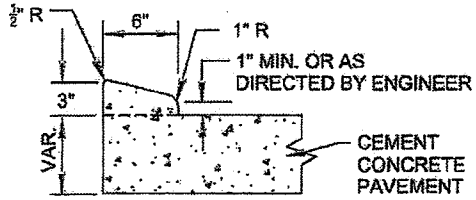

TYPE "D" MOUNTABLE INTEGRAL CEMENT CONCRETE CURB

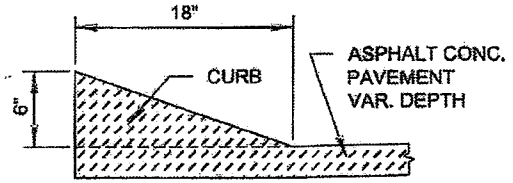

HMA WEDGE CURB DOWNHILL SIDE OF FULL STREET WARP

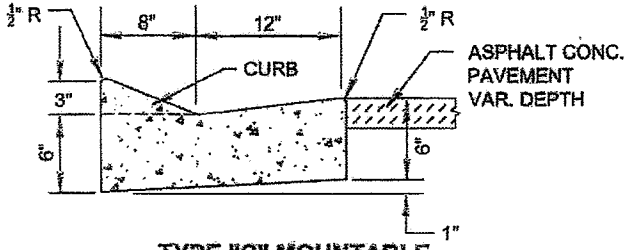

TYPE "C" MOUNTABLE CEMENT CONCRETE CURB & GUTTER

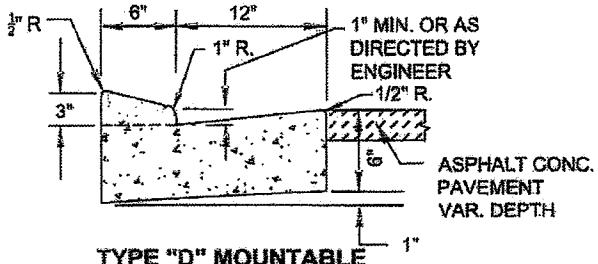

TYPE "D" MOUNTABLE CEMENT CONCRETE CURB & GUTTER

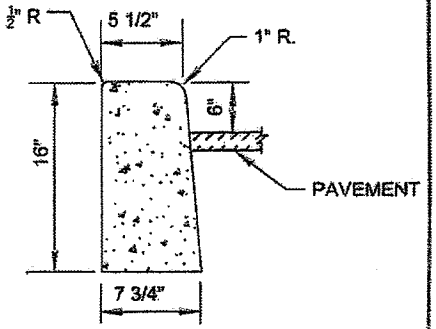

CEMENT CONCRETE TRAFFIC CURB

NOTE:

For trench crossings, curb and gutter shall be removed to a minimum 2' cut back over undisturbed soil. In all projects, any remaining sections of curb and gutter less than 5' in length between the project area and the nearest control joint shall also be removed and replaced. All joints shall be saw cut full depth prior to restoration and 3/8" expansion joint installed. Concrete finish shall match existing. Cutting wheel run-out beyond the limits of the opening shall be filled in accordance with WSDOT Standard Specification 5-05.3(8)B for cement concrete surfaces and 5-04.3(5)C for asphalt concrete surfaces.

CITY OF TACOMA DEPARTMENT OF PUBLIC WORKS	APPROVED FOR PUBLICATION James Parvey 09 JUN 2009 CITY ENGINEER DATE	CEMENT CONCRETE CURB AND GUTTER AND ASPHALT WEDGE CURB STANDARD PLAN NO. SU-03

NOTES:

1. Sidewalks shall be designed and constructed in accordance with ADA Standards for Accessible Design, 28 CFR, Part 35 and as supplemented by the Public Right of Way Accessibility Guidelines (PROWAG).
2. When placing walk adjacent to existing curb and gutter, curb and gutter will be repaired as necessary before placing concrete forms for walk.
3. Staking is required where no curb is present.
4. Thickened edge shall be constructed using cement concrete on all radii. All other locations shall be backfilled and compacted.
5. Combination walk shall be 7' on all commercial sites and arterial streets. Combination walk shall be a minimum of 5'-6" on non arterial streets. Dimensions are from face of curb to back of walk.
6. All expansion joints shall be full depth with 3/8" premolded joint filler.
7. All joints shall be cleaned and edged. External edges shall be 1/2" radius. Internal joints shall be 1/4" radius.
8. All soft and yielding foundation material shall be removed and replaced with crushed surfacing top course (CSTC) per Section 9-03.9(3) of the WSDOT Standard Specifications.
9. All sidewalk shall be replaced to the nearest expansion or contraction joint. All joints shall be saw cut full depth prior to restoration and 3/8" expansion joint installed. Cutting wheel run-out beyond the limits of the opening shall be filled in accordance with WSDOT Standard Specification 5-05.3(8)B for cement concrete surfaces and 5-04.3(5)C for asphalt concrete surfaces.
10. For sidewalks within the North Slope Historical District area per Standard Plan ND-NS01, see Standard Plan HD-NS03.

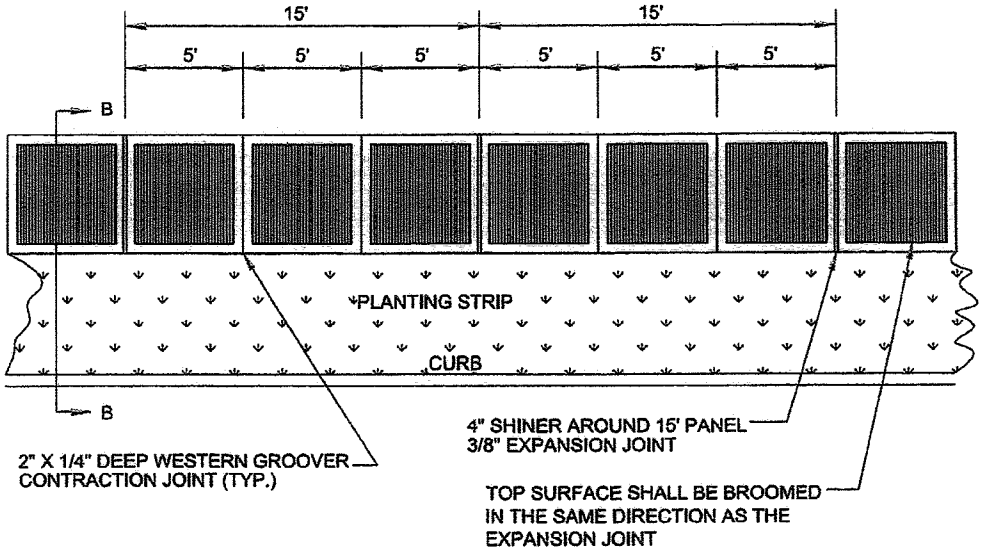

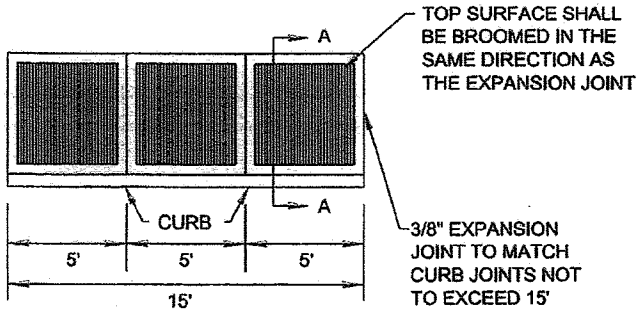

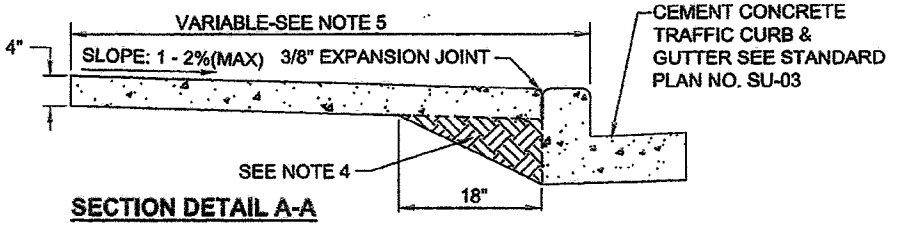

SECTION DETAIL A-A

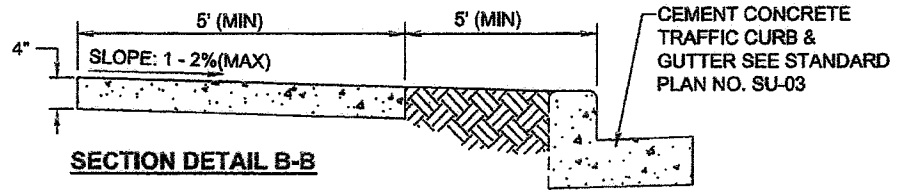

SECTION DETAIL B-B

CITY OF TACOMA DEPARTMENT OF PUBLIC WORKS	APPROVED FOR PUBLICATION CITY ENGINEER 12/6/14 DATE	CEMENT CONCRETE SIDEWALK STANDARD PLAN NO. SU-04

GENERAL NOTES:

1. Provide a separate directional curb ramp for each marked or unmarked crosswalk. (Directional ramps are preferred over 45 degree ramps.) Curb ramp location shall be placed within the width of the associated crosswalk, or as shown on the Contract Plans. The ramp centerline shall be parallel to the direction of the crossing. Forty-five (45) degree ramps shall be installed only after approval by the City's ADA Coordinator and/or the Construction Division Manager.
2. Where "GRADE BREAK" is called out, the entire length of the grade break between the two adjacent surface planes shall be flush and perpendicular to the direction of travel. There shall be no vertical discontinuity between the base of ramp and gutter line.
3. Do not place gratings, junction boxes, access covers, or other appurtenances in front of the curb ramp or on any part of the curb ramp or landing. Placement on/in front of ramp flares is allowed.
4. See Contract Plans for the curb design specified. See **Standard Plan SU-03** for Curb, and Curb and Gutter Details.
5. See **Standard Plan SU-04** for Cement Concrete Sidewalk Details. See Contract Plans for width and placement of sidewalk. A thickened edge shall be constructed to full depth of adjacent curb along entire curb radius.
6. For sidewalk ramps within the North Slope Historical District area, per **Standard Plan HD-NS01**, apply Lamp Black 1lb. per cubic yard of cement concrete or as required for discoloration in accordance with ASTM D209-81 Standard Specifications for Lamp Black pigment.
7. The curb ramp maximum running slope shall not require the ramp length to exceed 15 feet to avoid chasing the slope indefinitely when connecting to steep grades. When applying the 15 foot max. length, the running slope of the curb ramp shall be as flat as possible.
8. Curb ramp, landing and flares shall receive a broom finish, see **Standard Specifications 8-14**.
9. All curb ramp designs shall be stamped by a licensed Professional Engineer. If meeting the current design standards is not possible, ramps shall be constructed to the maximum extent feasible as indicated by an Engineer's note on the stamped drawings. Rationale supporting the design variance shall be provided by the Engineer and shall include a description of the scope of work, the site-specific factors affecting compliance, and the measures implemented to improve compliance
10. Pedestrian traffic should be aligned to the receiving ramp. The receiving ramp shall be upgraded or replaced as required in the City's Curb Ramp Installation Matrix.
11. Consult the City's Curb Ramp Installation Matrix and the Street Restoration Policy for additional requirements.
12. Conduit for APS equipment shall be installed during curb ramp construction at all signalized intersections and at intersections where signalization is anticipated within the next 6 years. Coordinate with Public Works - Engineering, Traffic Section.
13. A Pedestrian Accessibility Control Plan shall be developed in conjunction with the project-specific Temporary Traffic Control Plan for all work in the ROW.
14. Pedestrian traffic shall NOT be directed behind the stop bar.
15. Ramp alignment should be consistent with crosswalk alignment
16. Catch basins shall be located upstream of curb ramps for new construction or when performing storm sewer upgrades.
17. For constructability purposes, the City recommends designing to **less than** the maximum allowable slopes.

CITY OF TACOMA DEPARTMENT OF PUBLIC WORKS	APPROVED FOR PUBLICATION James Parvey 01 Apr 2011 CITY ENGINEER DATE	CURB RAMP DETAILS GENERAL INFORMATION STANDARD PLAN NO. SU-05

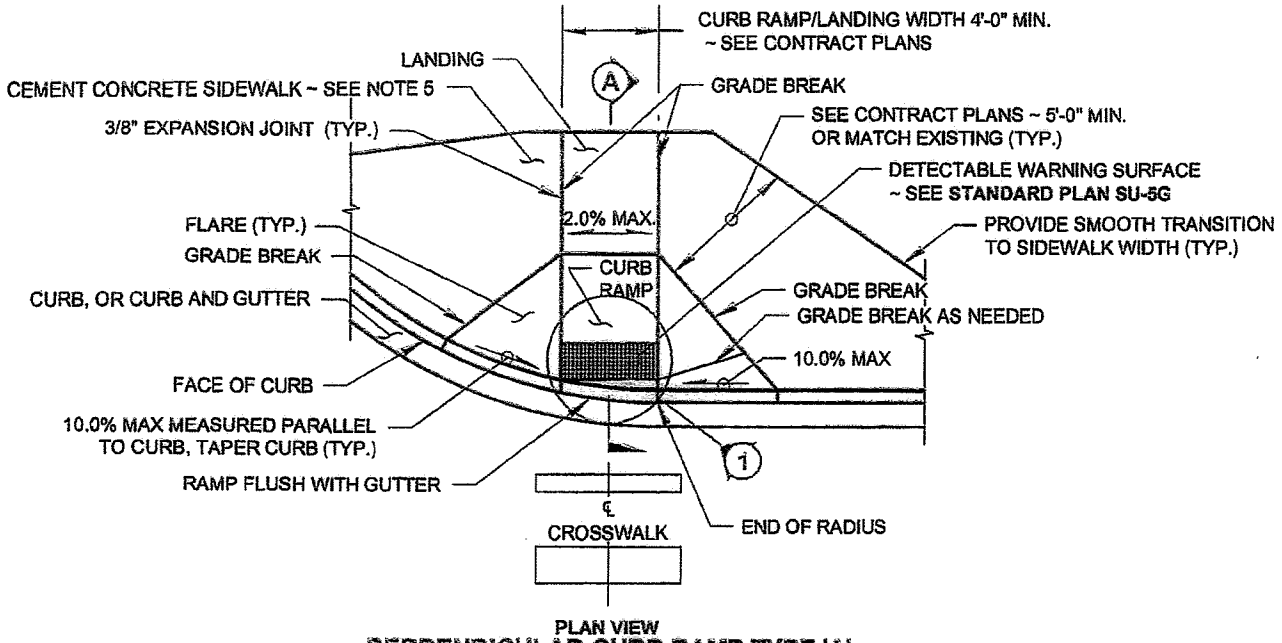

PLAN VIEW

PERPENDICULAR CURB RAMP TYPE 'A'

NOTES:

SEE STANDARD PLAN SU-05 FOR REFERENCED NOTES

LEGEND:

SLOPE IN EITHER DIRECTION

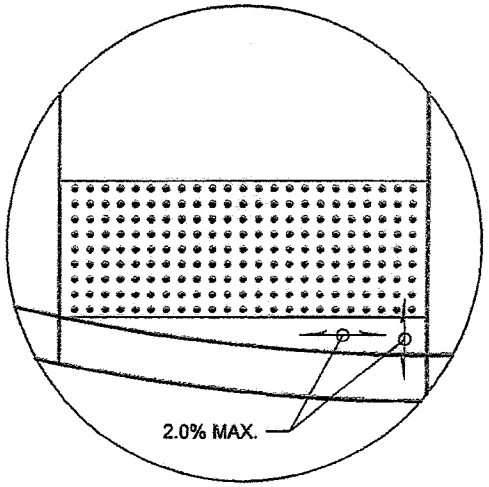

DETAIL (1)

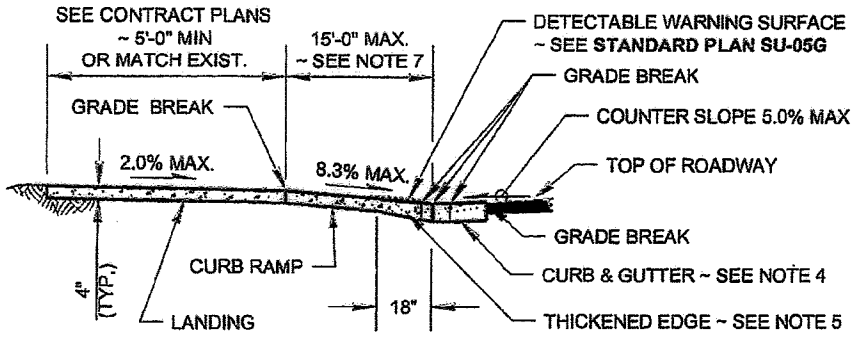

SECTION (A)

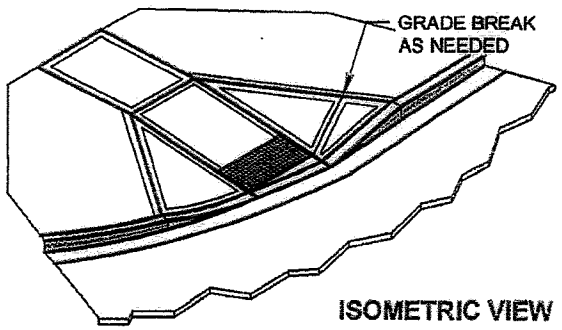

ISOMETRIC VIEW

CITY OF TACOMA
DEPARTMENT OF PUBLIC WORKS

APPROVED FOR PUBLICATION

James Parvey — 01 Apr. 2011

CITY ENGINEER — DATE

PERPENDICULAR CURB RAMP
TYPE 'A'

STANDARD PLAN NO. SU-05A

NOTES:

SEE **STANDARD PLAN SU-05** FOR REFERENCED NOTES

LEGEND:

SLOPE IN EITHER DIRECTION

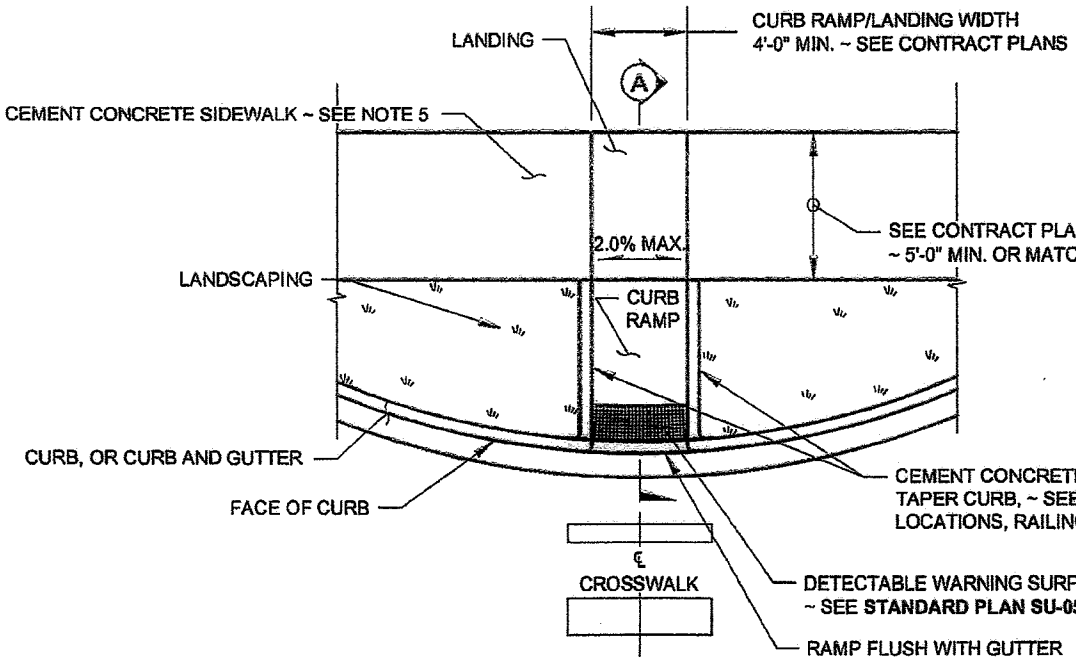

PLAN VIEW

PERPENDICULAR CURB RAMP TYPE 'B'

(SHOWN WITH LANDSCAPED BUFFER)

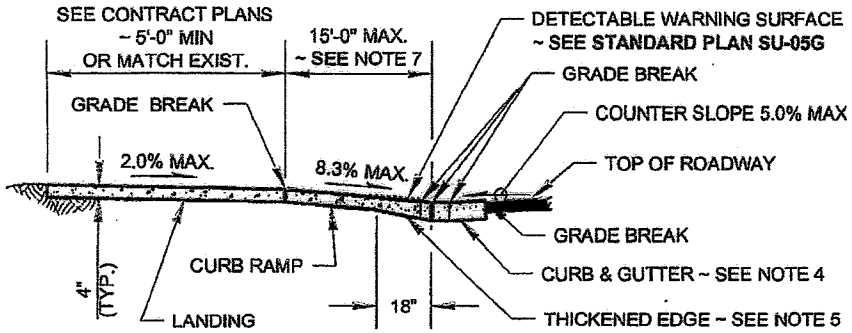

SECTION (A)

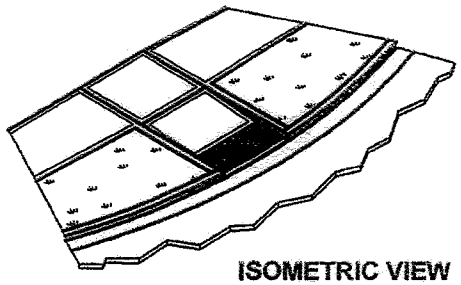

ISOMETRIC VIEW

(SHOWN WITH LANDSCAPED BUFFER)

CITY OF TACOMA
DEPARTMENT OF PUBLIC WORKS

APPROVED FOR PUBLICATION

James Parvey — CITY ENGINEER

01 Apr 2011 — DATE

PERPENDICULAR CURB RAMP TYPE 'B'

STANDARD PLAN NO. SU-05B

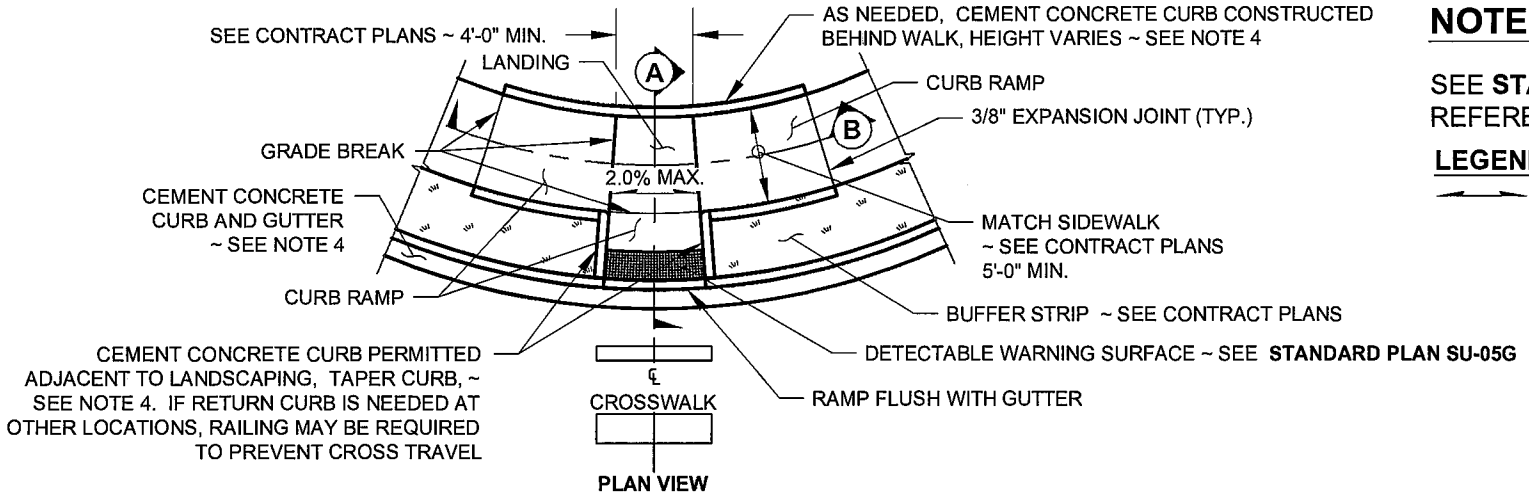

PLAN VIEW

COMBINATION CURB RAMP
(WITH BUFFER)

NOTES:

SEE **STANDARD PLAN SU-05** FOR REFERENCED NOTES

LEGEND:

SLOPE IN EITHER DIRECTION

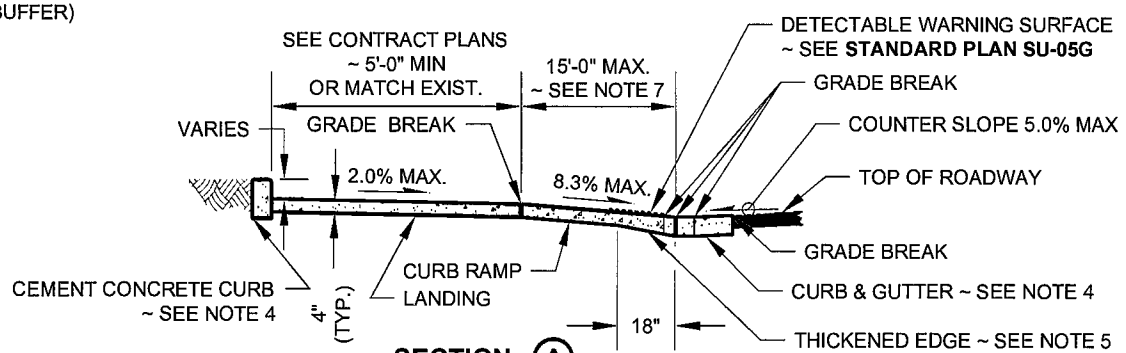

SECTION (A)

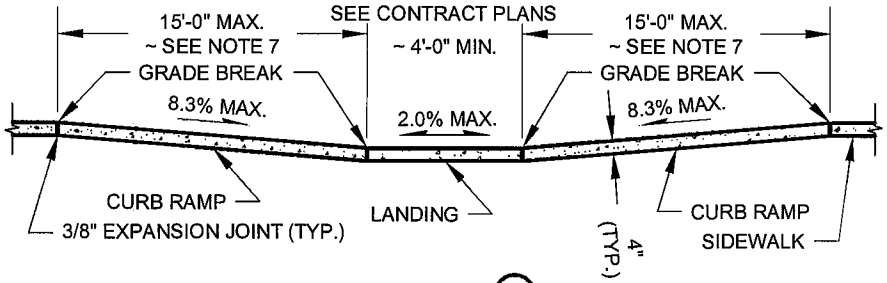

SECTION (B)

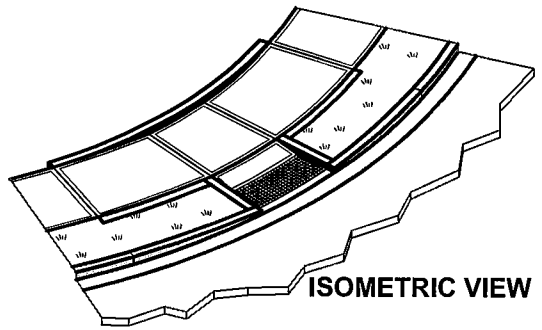

ISOMETRIC VIEW

CITY OF TACOMA
DEPARTMENT OF PUBLIC WORKS

APPROVED FOR PUBLICATION

James Parvey — CITY ENGINEER

01 Apr. 2011 — DATE

COMBINATION CURB RAMP

STANDARD PLAN NO. SU-05C

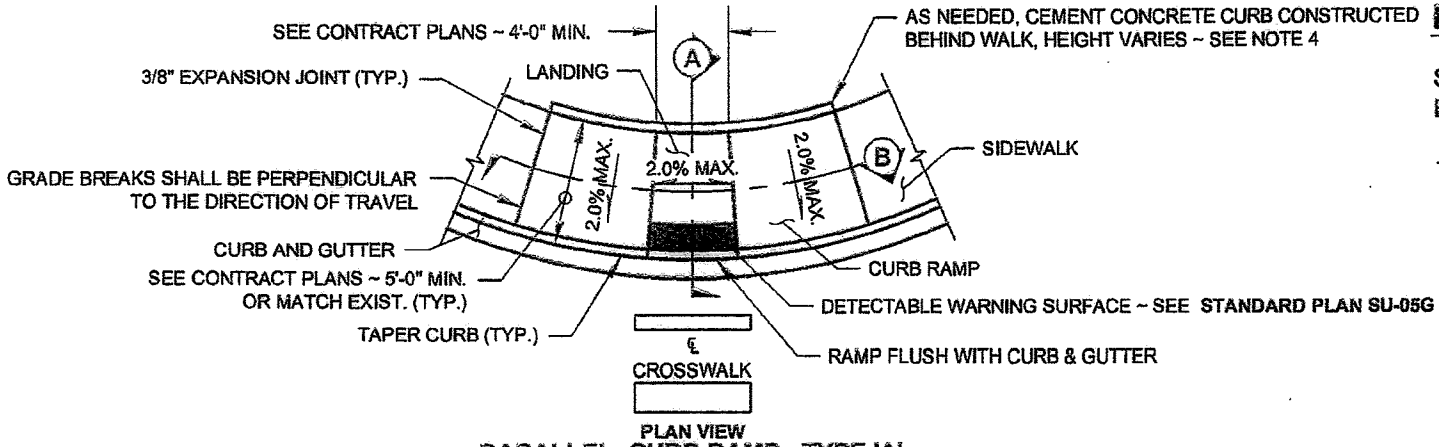

PARALLEL CURB RAMP - TYPE 'A'

NOTES:

SEE STANDARD PLAN SU-05 FOR REFERENCED NOTES.

LEGEND:

⟷ SLOPE IN EITHER DIRECTION

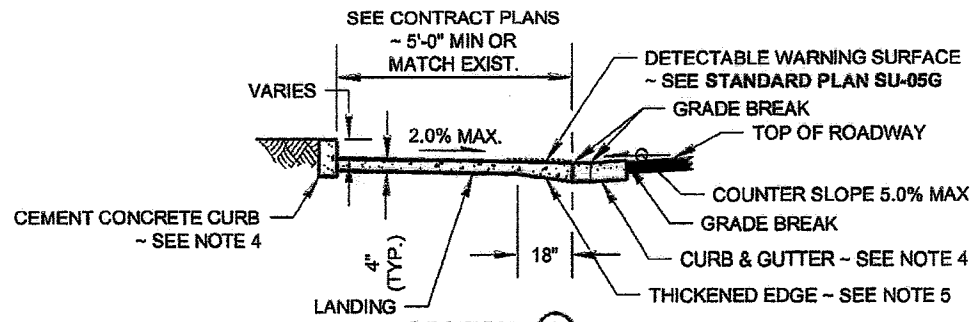

SECTION (A)

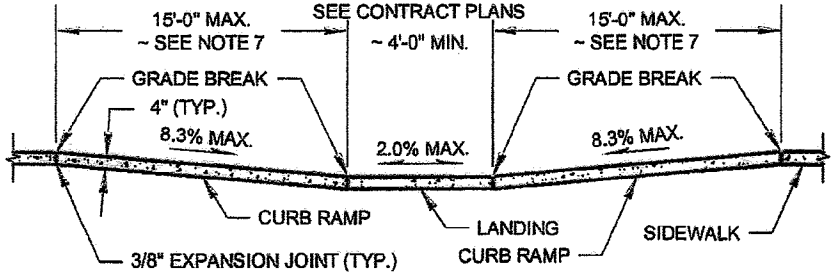

SECTION (B)

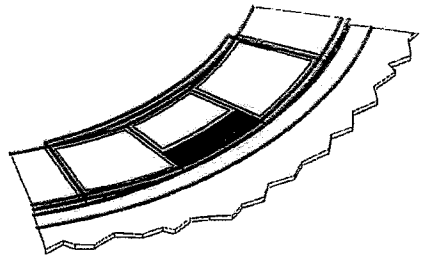

ISOMETRIC VIEW

CITY OF TACOMA DEPARTMENT OF PUBLIC WORKS	APPROVED FOR PUBLICATION James Powey 01 Apr. 2011 CITY ENGINEER DATE	PARALLEL CURB RAMP TYPE 'A' STANDARD PLAN NO. SU-05D

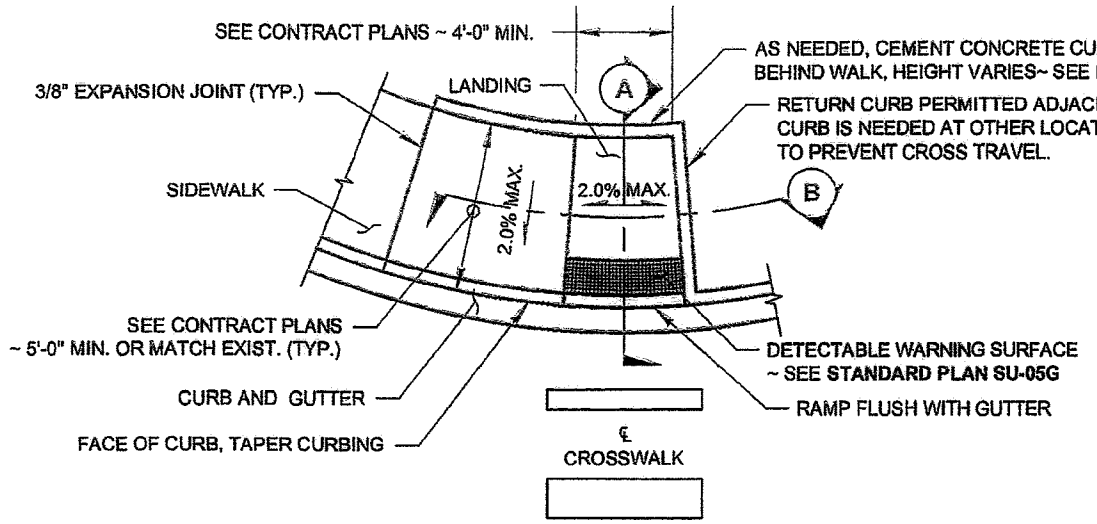

PLAN VIEW
PARALLEL CURB RAMP TYPE 'B'

NOTES:

SEE **STANDARD PLAN SU-05** FOR REFERENCED NOTES.

LEGEND:

SLOPE IN EITHER DIRECTION

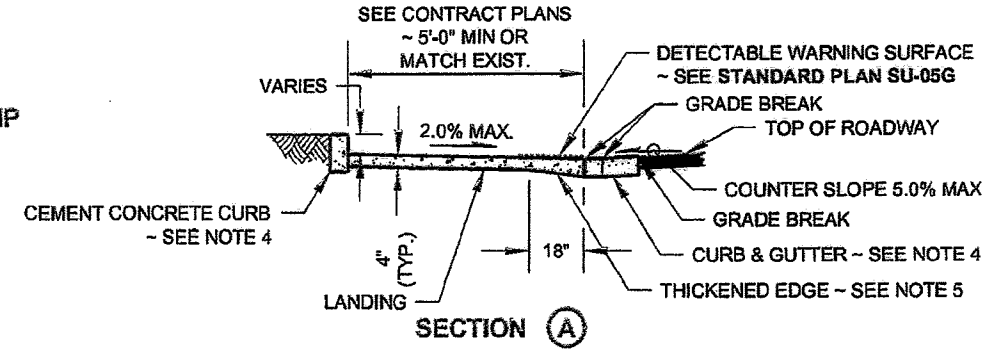

SECTION (A)

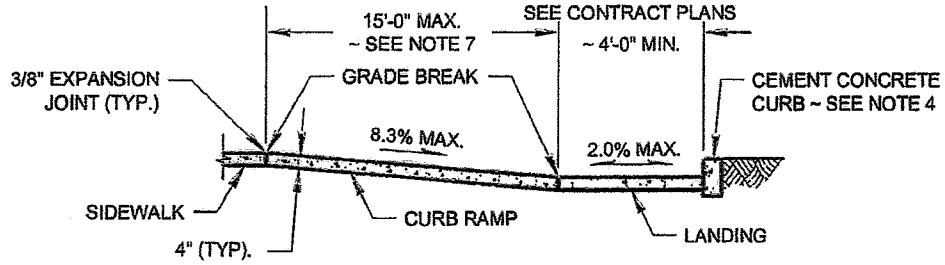

SECTION (B)

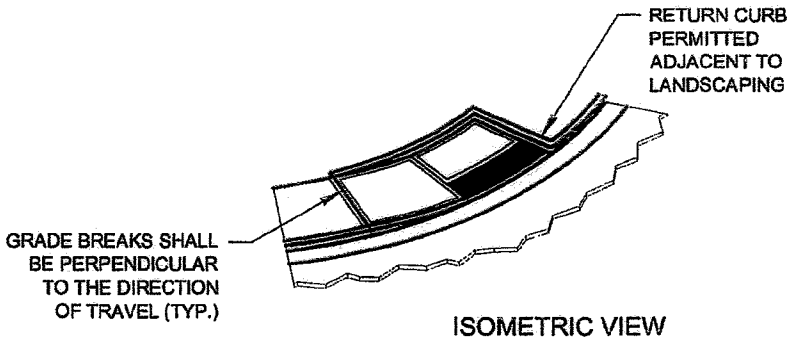

ISOMETRIC VIEW

CITY OF TACOMA
DEPARTMENT OF PUBLIC WORKS

APPROVED FOR PUBLICATION

James Parvey 01 Apr. 2011

CITY ENGINEER — DATE

PARALLEL CURB RAMP TYPE 'B'

STANDARD PLAN NO. SU-05E

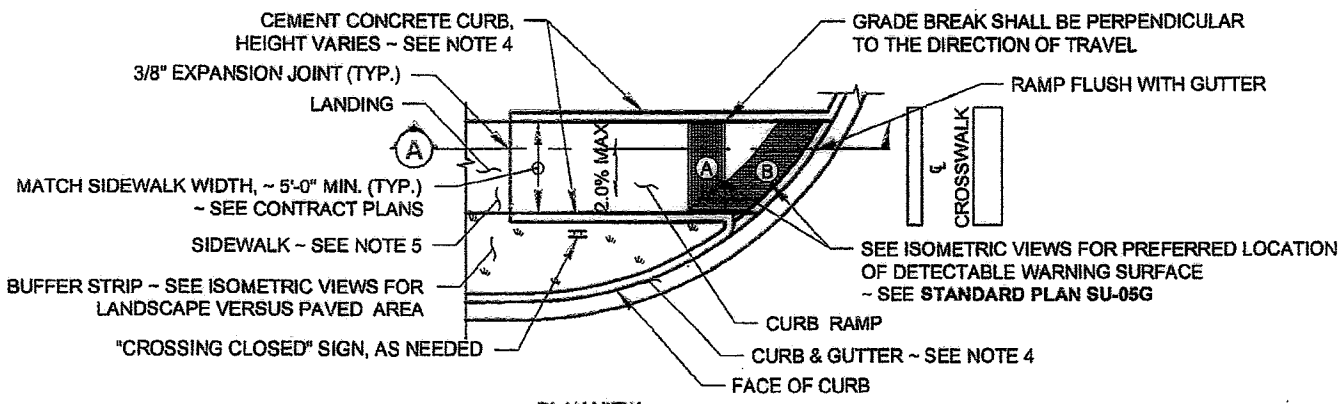

PLAN VIEW

SINGLE DIRECTION CURB RAMP

NOTES:

SEE **STANDARD PLAN SU-05** FOR REFERENCED NOTES.

THIS PLAN IS TO BE USED WHERE PEDESTRIAN CROSSING IN ONLY ONE DIRECTION IS PERMITTED.

LEGEND:

SLOPE IN EITHER DIRECTION

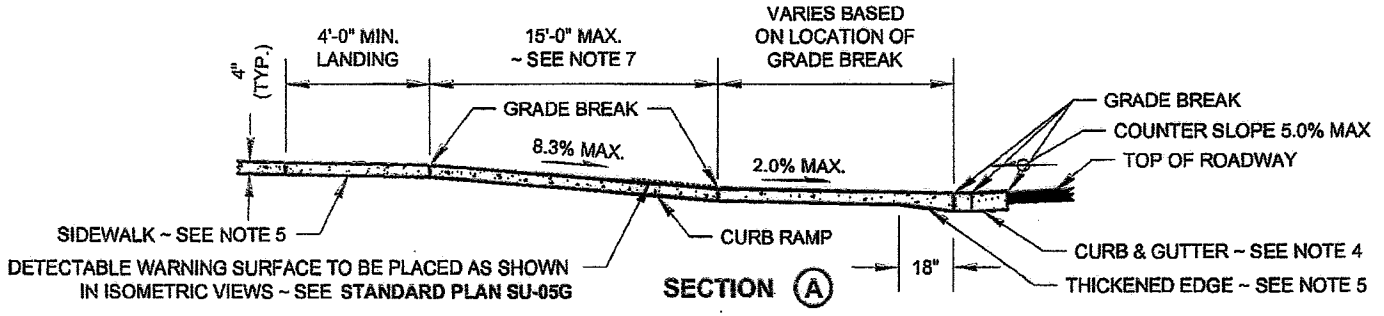

SECTION (A)

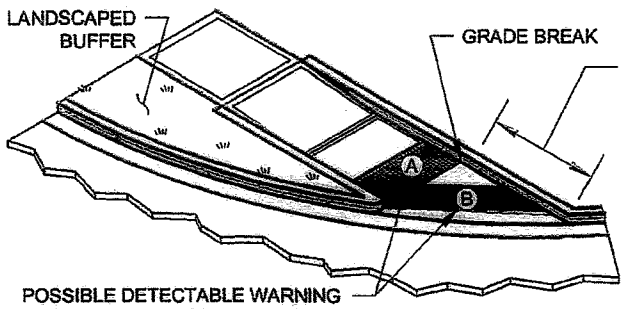

ISOMETRIC VIEW

(SHOWN WITH LANDSCAPED BUFFER)

IF LESS THAN 5', PLACE DETECTABLE WARNING AT LOCATION (A)

IF GREATER THAN 5', PLACE DETECTABLE WARNING AT LOCATION (B)

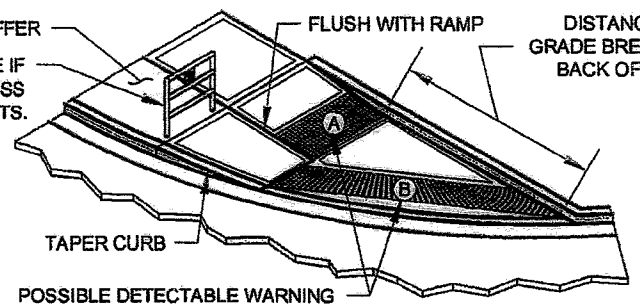

ISOMETRIC VIEW

(SHOWN WITH PAVED BUFFER)

CITY OF TACOMA

DEPARTMENT OF PUBLIC WORKS

APPROVED FOR PUBLICATION

James Parvey — CITY ENGINEER

01 Apr 2011 — DATE

SINGLE DIRECTION CURB RAMP

STANDARD PLAN NO. SU-05F

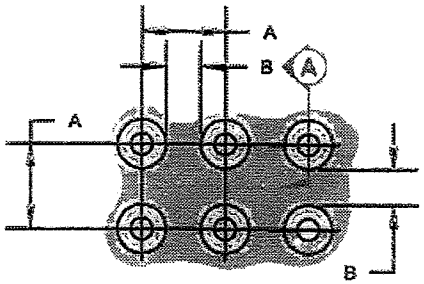

TRUNCATED DOME SPACING

TRUNCATED DOME DETAILS

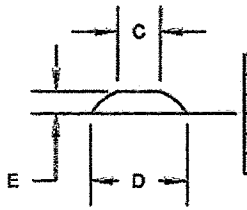

TRUNCATED DOME

	MIN.	MAX.
A	1.60"	2.40"
B	0.65"	-
C	0.45"	0.90"
D	0.90"	1.40"
E	0.20"	0.20"

SECTION A

NOTES:

1. The Detectable Warning Surface shall extend the full width of the curb ramp (exclusive of flares) or the landing.
2. The rows of truncated domes in a detectable Warning Surface shall be parallel with the direction of wheel chair travel.
3. See **Standard Plans** for sidewalk and curb ramp details
4. If a curb is not present, place the Detectable Warning Surface at the edge of the pavement.
5. The Detectable Warning Pattern shall be installed using Vanguard ADA Systems, ADA Solutions, Armor-Tile, or approved equal. All detectable warning surface tiles shall be cast in place and shall not use anchors or bolts which make them removable. Concrete shall be blocked out as required for the installation of the Detectable Warning Pattern material.
6. The Detectable Warning Pattern area shall be yellow and shall match the color of Federal Standard 595a, color number 33538
7. See **Standard Plan SU-05H** for Detectable Warning Surface placement guidelines.

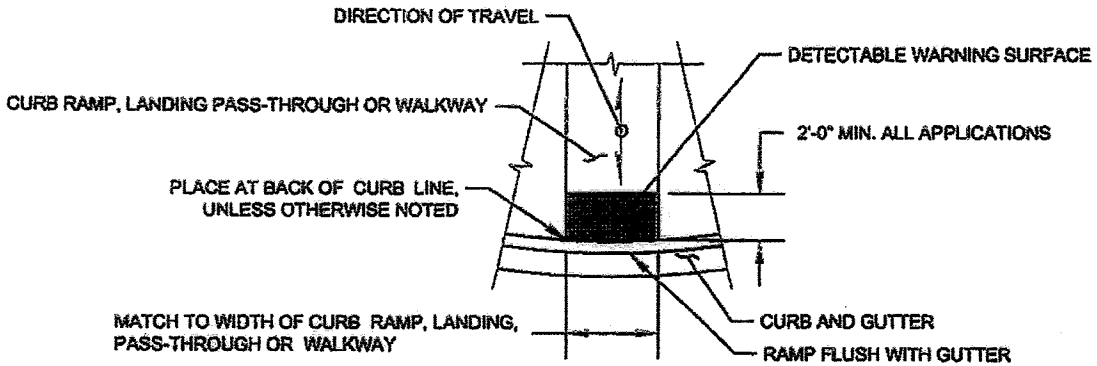

DETECTABLE WARNING SURFACE DETAIL

CITY OF TACOMA DEPARTMENT OF PUBLIC WORKS	APPROVED FOR PUBLICATION CITY ENGINEER 1/17/13 DATE	DETECTABLE WARNING SURFACE DETAILS STANDARD PLAN NO. SU-05G

C:\Documents and Settings\respuza\Local Settings\Temporary Internet Files\Content.Outlook\IG051QSK\DRAFT SU-05G.dwg, 1/16/2013 1:59:18 PM, respuza

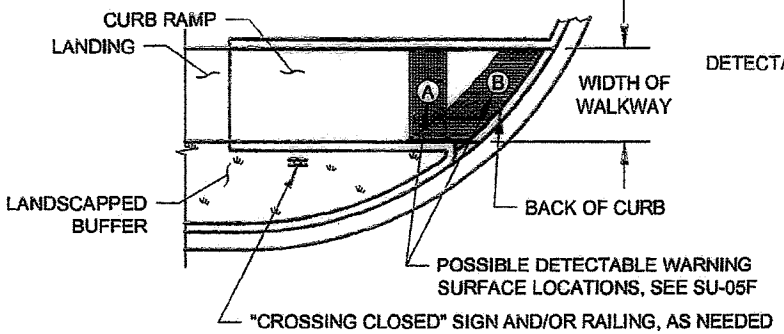

SINGLE DIRECTION CURB RAMP

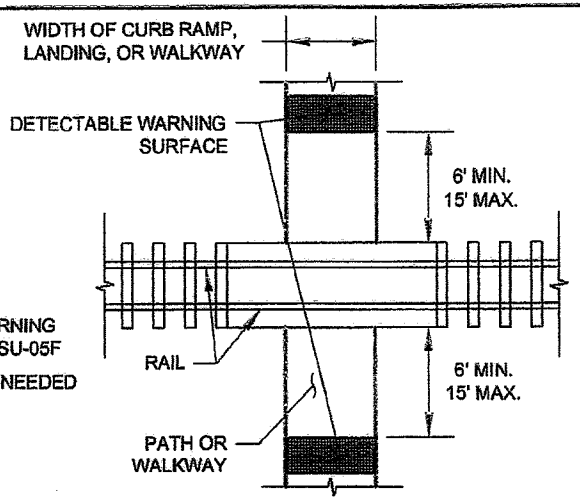

PEDESTRIAN RAILROAD CROSSING

NOTES:

1. The Detectable Warning Surface shall extend the full width of the curb ramp (exclusive of flares) or the landing.
2. The edge of the Detectable Warning Surface shall be placed along the back of the curb line unless otherwise noted.
3. The rows of truncated domes in the Detectable Warning Surface shall be parallel with the direction of travel.
4. See **Standard Plans** for sidewalk and curb ramp details
5. If a curb is not present, place the Detectable Warning Surface at the edge of the pavement.
6. The Detectable Warning Pattern shall be installed using Vanguard ADA Systems, or Armor-Tile "Cast in Place Systems" as manufactured by Engineering Plastics Inc., or approved equal. Concrete shall be blocked out as required for the installation of the Detectable Warning Pattern material. See **Standard Plan SU-05G** for additional information.
7. The Detectable Warning Pattern area shall be yellow and shall match the color of Federal Standard 595a, Color Number 33538 unless otherwise noted.

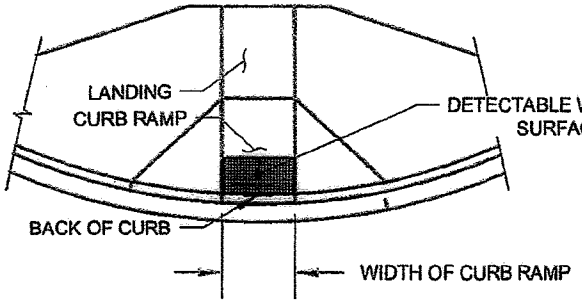

PERPENDICULAR CURB RAMP
(SEE SU-05A AND SU-05B)

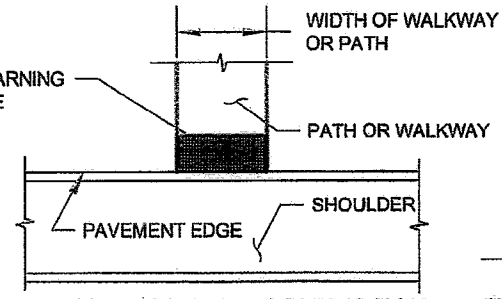

SHARED-USE PATH CONNECTION

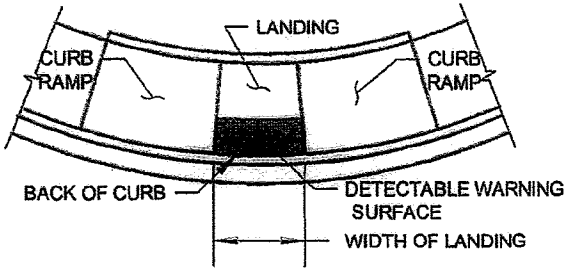

PARALLEL CURB RAMP
(SEE SU-05C, SU-05D AND SU-05E)

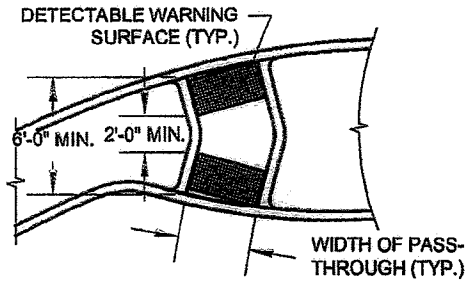

ROUNDABOUT SPLITTER ISLAND

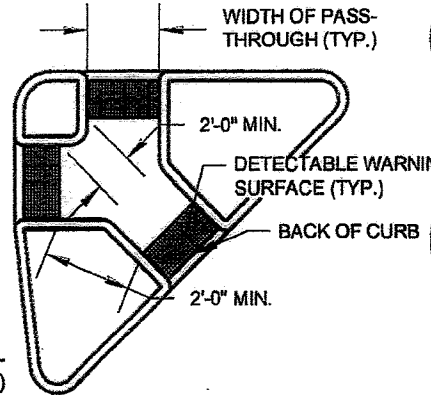

ISLAND PASS-THROUGH

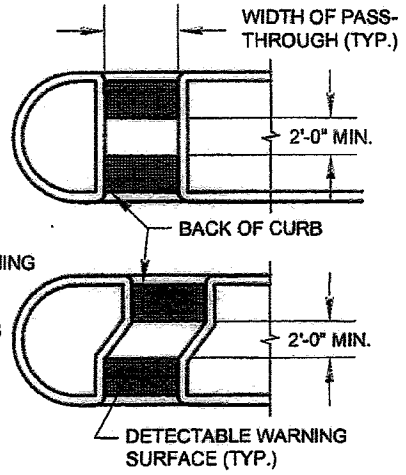

MEDIAN PASS-THROUGH

CITY OF TACOMA
DEPARTMENT OF PUBLIC WORKS

APPROVED FOR PUBLICATION

James Parvey 01 Apr 2011

CITY ENGINEER DATE

DETECTABLE WARNING SURFACE PLACEMENT GUIDELINES

STANDARD PLAN NO. SU-05H

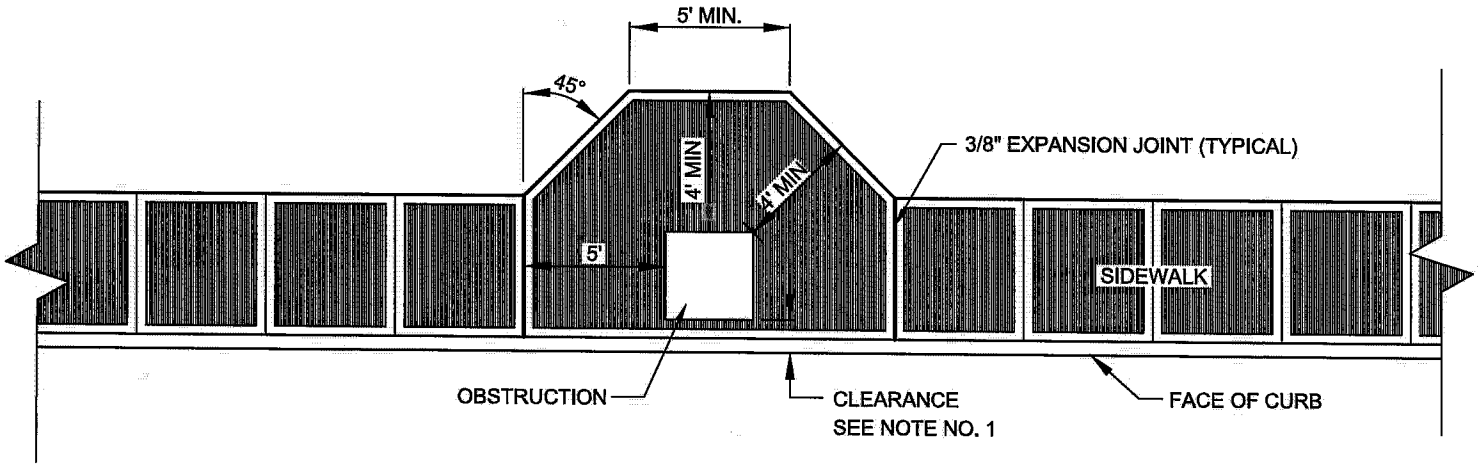

NOTES:

1. The clearance between the face of curb and any obstruction, except mail boxes, shall be a minimum of 1'-6". The front of a mail box shall be 6" to 8" from the face of curb.

2. A minimum clear width of 4' shall be provided for continous passage around the obstruction.

CITY OF TACOMA **DEPARTMENT OF PUBLIC WORKS**	**APPROVED FOR PUBLICATION** James Parvey 24 Aug 2009 CITY ENGINEER DATE	**MINIMUM SIDEWALK WIDTH AT OBSTRUCTIONS** **STANDARD PLAN NO. SU-06**

NOTES:

1. Type 1 driveway shall be used where the planting strip width is 5' or greater.
2. Concrete shall be a minimum compressive strength of 3,000 PSI.
3. All joints shall be cleaned & edged. External joints to the driveway shall be 1/2" radius. Internal joints to the driveway shall be 1/4" radius.
4. Driveways wider or narrower than shown on this plan require approval of the Director of Public Works.
5. Driveway section shall be a brushed finish in a transverse direction to the center line of driveway.
6. Driveways wider than 20' require a center line expansion joint.
7. All expansion joints shall be full depth.
8. When trenching through a driveway, replacements for driveways greater than 20' in width shall include a minimum 2' wide cut back over undisturbed soil and extend to the nearest control joint. Replacements for driveways 20' or less in width will require a full driveway replacement.
9. All joints shall be saw cut full depth prior to restoration and 3/8" expansion joint installed. Cutting wheel run-out beyond the limits of the opening shall be filled in accordance with WSDOT Standard Specification 5-05.3(8)B for cement concrete surfaces and 5-04.3(5)C for asphalt concrete surfaces.
10. Minimum 5' between adjacent sidewalk transitions.
11. For driveway entrances within the North Slope Historical District area per Standard Plan HD-NS01, see Standard Plan HD-NS02.

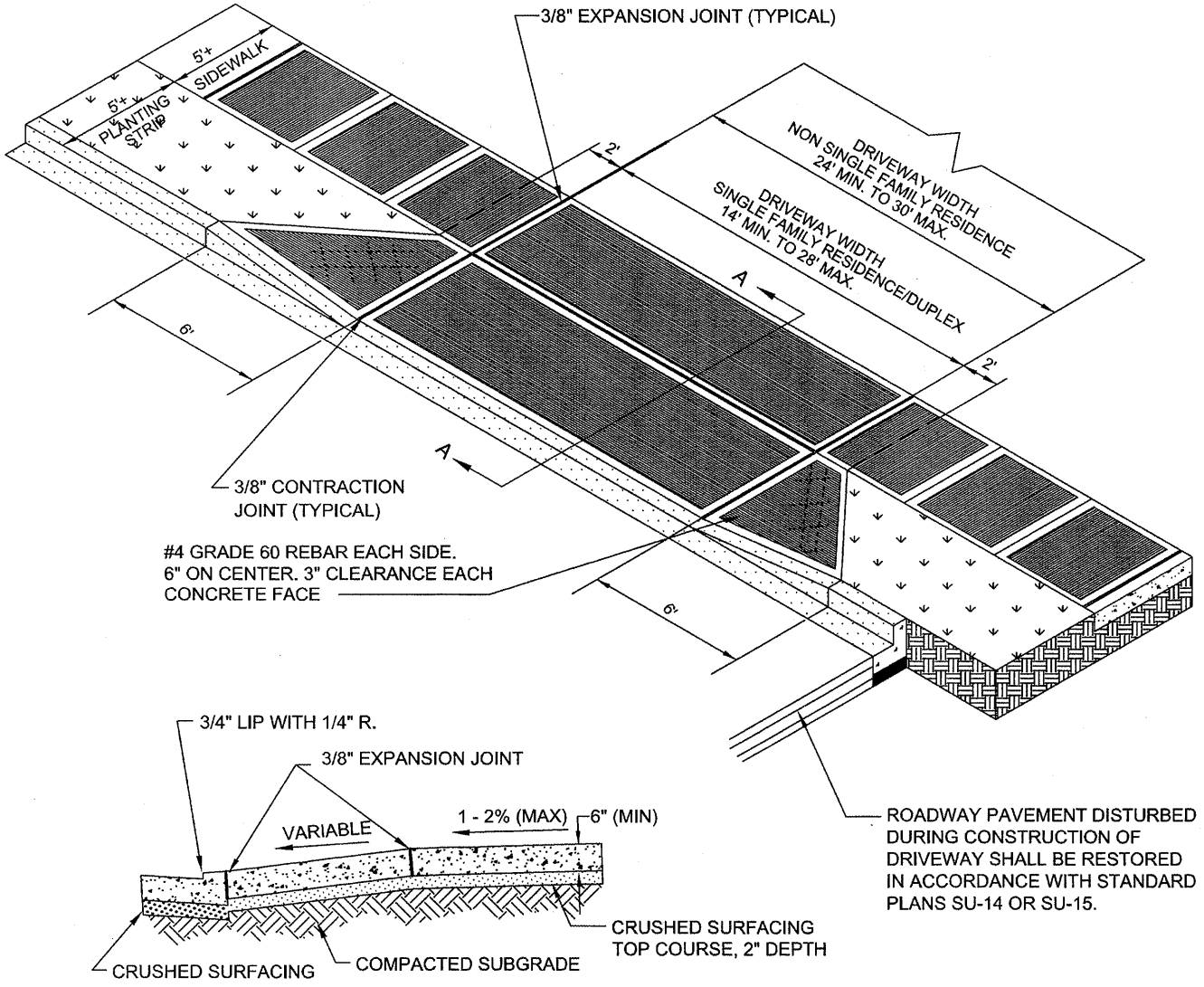

SECTION DETAIL A-A

NTS

CITY OF TACOMA **DEPARTMENT OF PUBLIC WORKS**	**APPROVED FOR PUBLICATION** CITY ENGINEER — DATE 6/30/10	**CEMENT CONCRETE DRIVEWAY ENTRANCE TYPE 1** **STANDARD PLAN NO. SU-07**

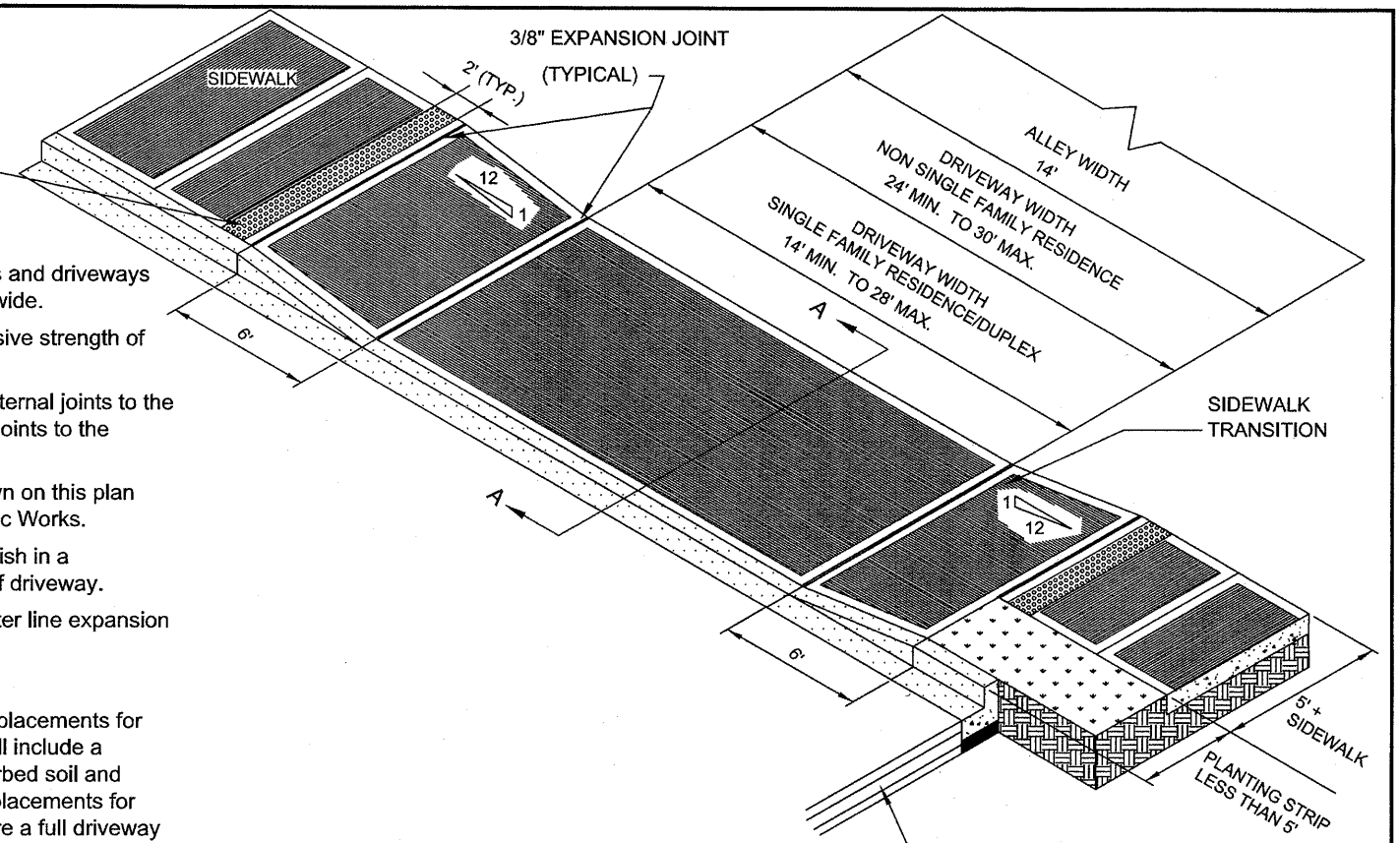

NOTES:

1. Type 2 driveway shall be used at alleys and driveways where the planting strip is less than 5' wide.
2. Concrete shall be a minimum compressive strength of 3,000 PSI.
3. All joints shall be cleaned & edged. External joints to the driveway shall be 1/2" radius. Internal joints to the driveway shall be 1/4" radius.
4. Driveways wider or narrower than shown on this plan require approval of the Director of Public Works.
5. Driveway section shall be a brushed finish in a transverse direction to the center line of driveway.
6. Driveways wider than 20' require a center line expansion joint.
7. All expansion joints shall be full depth.
8. When trenching through a driveway, replacements for driveways greater than 20' in width shall include a minimum 2' wide cut back over undisturbed soil and extend to the nearest control joint. Replacements for driveways 20' or less in width will require a full driveway replacement.
9. All joints shall be saw cut full depth prior to restoration and 3/8" expansion joint installed. Cutting wheel run-out beyond the limits of the opening shall be filled in accordance with WSDOT Standard Specification 5-05.3(8)B for cement concrete surfaces and 5-04.3(5)C for asphalt concrete surfaces.
10. Minimum 5' between adjacent sidewalk transitions.
11. For driveway and alley entrances within the North Slope Historical District area per Standard Plan HD-NS01, see Standard Plan HD-NS02 and HD-NS04.

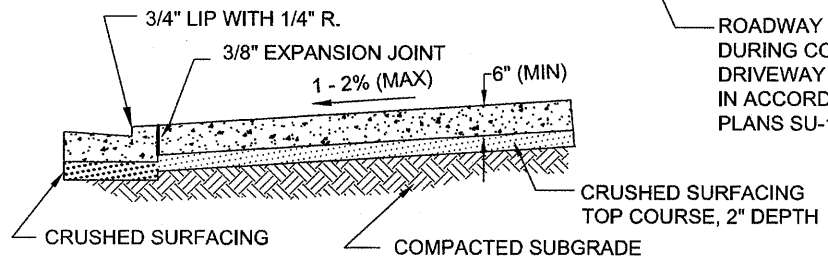

SECTION DETAIL A-A
NTS

CITY OF TACOMA
DEPARTMENT OF PUBLIC WORKS

APPROVED FOR PUBLICATION

CITY ENGINEER

11/30/10
DATE

CEMENT CONCRETE DRIVEWAY ENTRANCE TYPE 2

STANDARD PLAN NO. SU-08

NOTES:

1. Type 3 driveway shall be used at alleys where the planting strip is 5' wide or greater.
2. Concrete shall be a minimum compressive strength of 3,000 PSI.
3. All joints shall be cleaned & edged. External joints to the driveway shall be 1/2" radius. Internal joints to the driveway shall be 1/4" radius.
4. Driveways wider than 14' require approval of the Director of Public Works.
5. Driveway section shall be a brushed finish in a transverse direction to the center line of driveway.
6. Dependent upon cross slope of driveway, additional drainage provisions may be required.
7. Concrete wings shall extend to front of walk.
8. When trenching through a driveway, the entire driveway shall be replaced.
9. All joints shall be saw cut full depth prior to restoration and 3/8" expansion joint installed. Cutting wheel run-out beyond the limits of the opening shall be filled in accordance with WSDOT Standard Specification 5-05.3(8)B for cement concrete surfaces and 5-04.3(5)C for asphalt concrete surfaces.
10. Minimum 5' between adjacent sidewalk transitions.
11. For alley entrances within the North Slope Historical District area per Standard Plan HD-NS01, see Standard Plan HD-NS04.

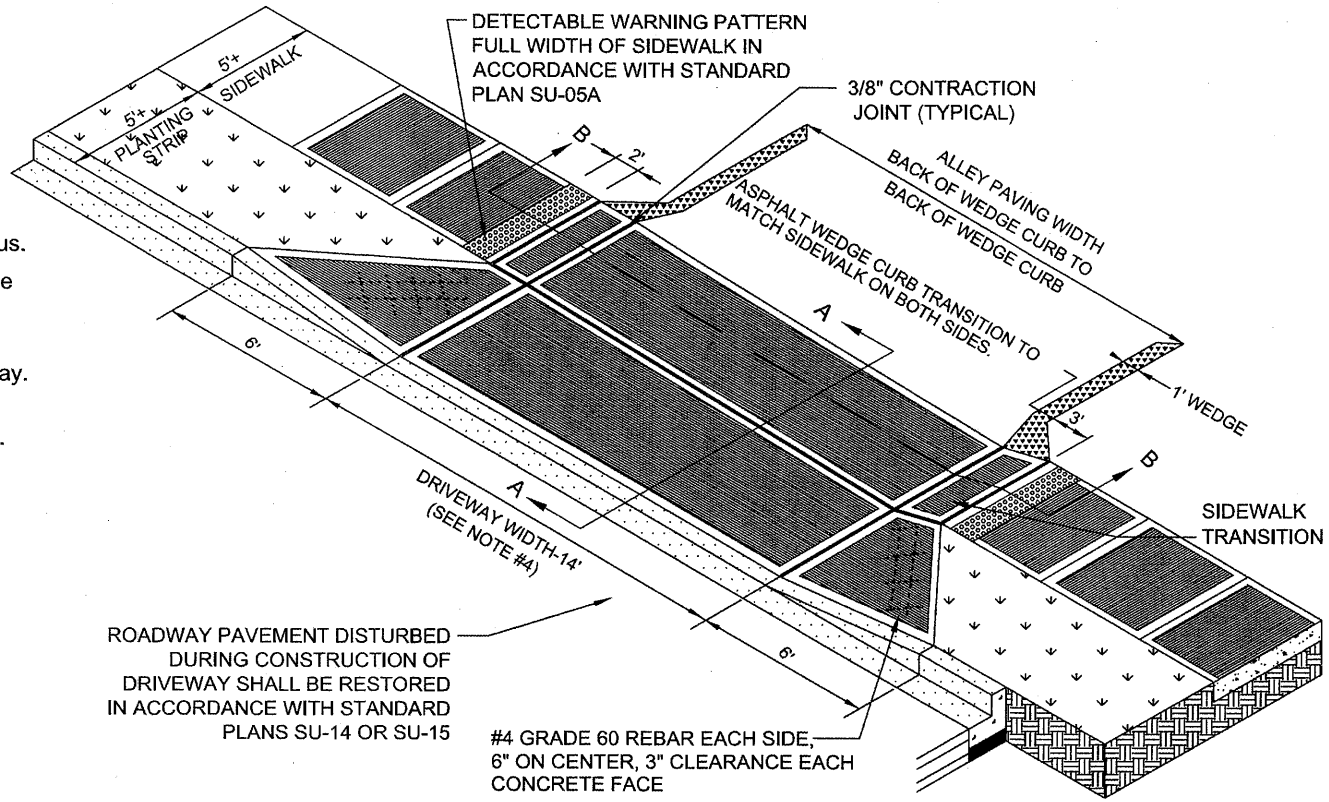

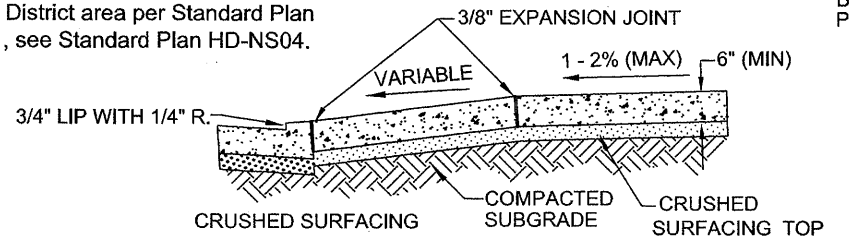

SECTION DETAIL A-A

NTS

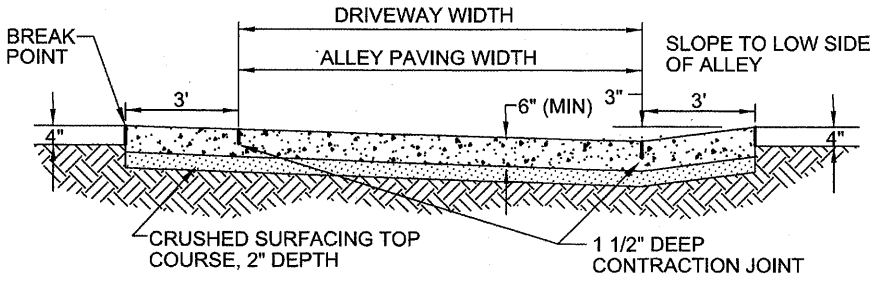

SECTION DETAIL B-B

NTS

CITY OF TACOMA **DEPARTMENT OF PUBLIC WORKS**	**APPROVED FOR PUBLICATION** CITY ENGINEER DATE 10/3/10	**CEMENT CONCRETE DRIVEWAY ENTRANCE TYPE 3** **STANDARD PLAN NO. SU-09**

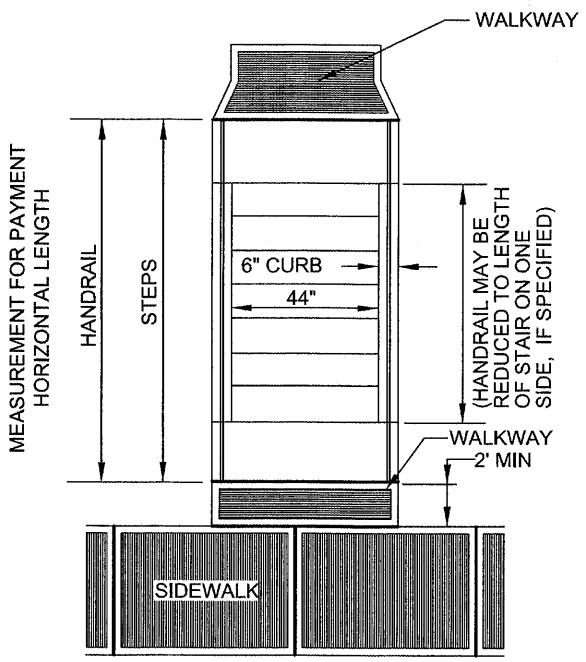

PLAN

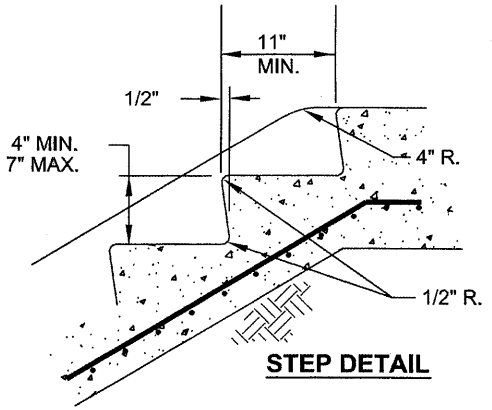

STEP DETAIL

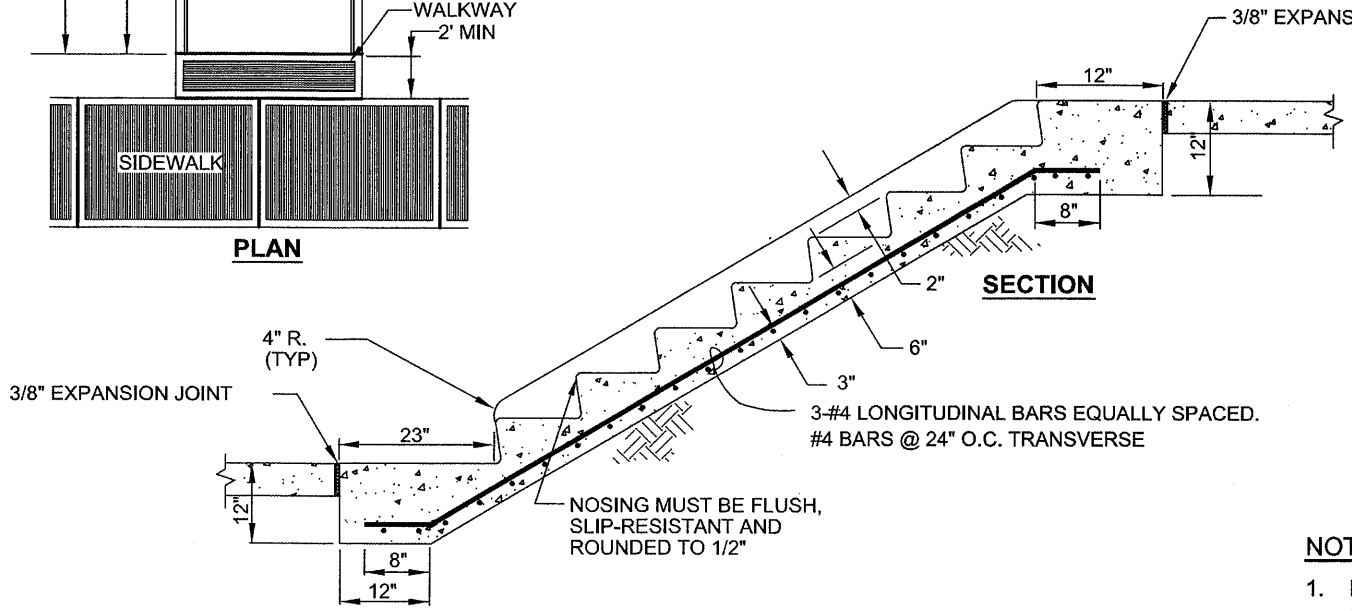

SECTION

NOTES:

1. For stairway handrail details, refer to Standard Plan No. SU-11.
2. Concrete shall be a minimum compressive strength of 3,000 PSI.

CITY OF TACOMA **DEPARTMENT OF PUBLIC WORKS**	**APPROVED FOR PUBLICATION** CITY ENGINEER DATE 4/30/15	**CEMENT CONCRETE STAIRWAY** **STANDARD PLAN NO. SU-10**

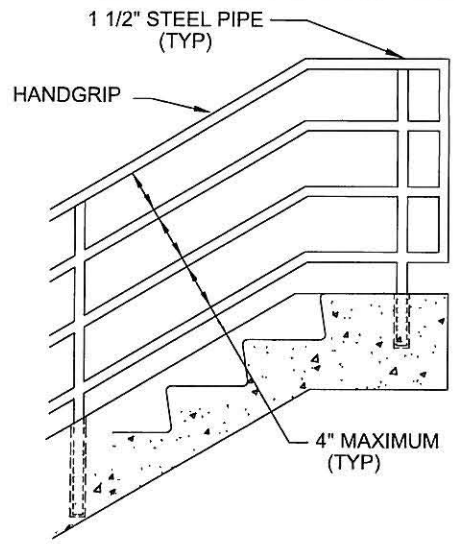

STEEL PIPE

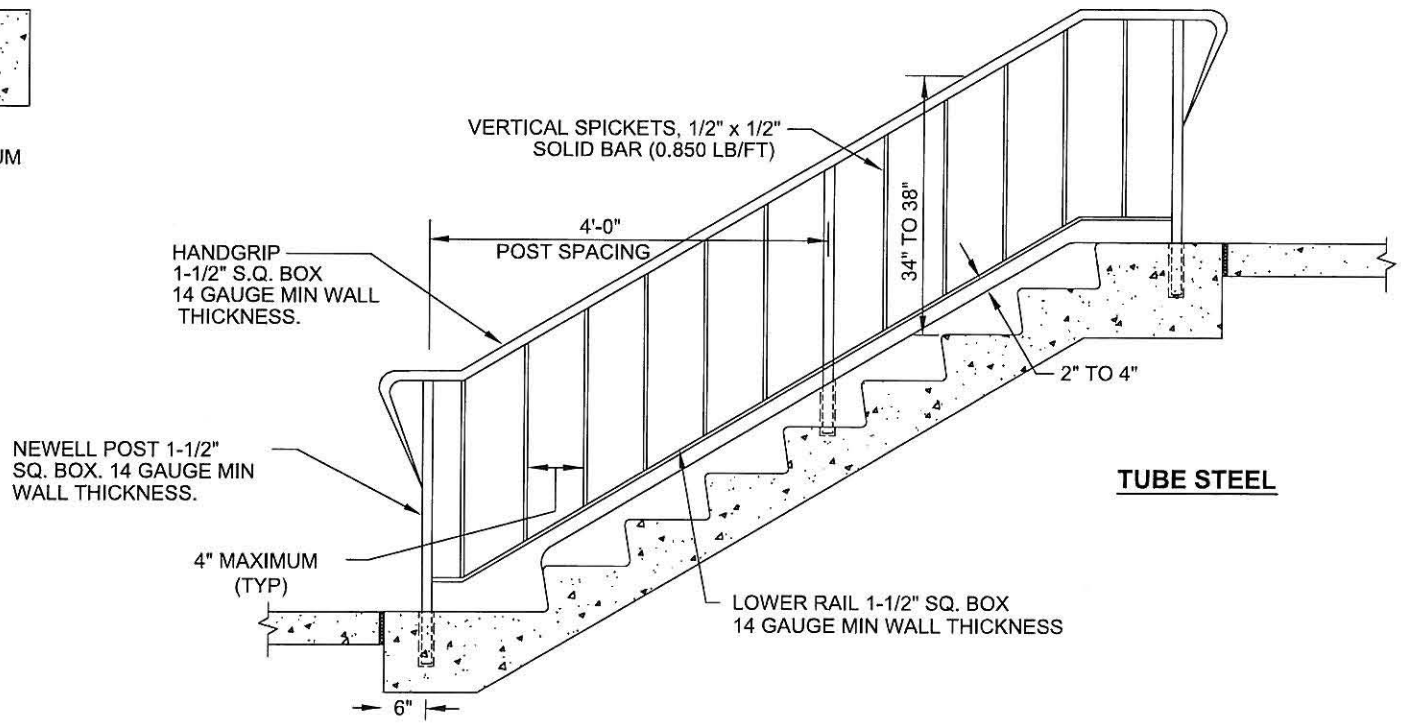

TUBE STEEL

NOTE:

For cement concrete stairway details, refer to Standard Plan No. SU-10

CITY OF TACOMA DEPARTMENT OF PUBLIC WORKS	APPROVED FOR PUBLICATION CITY ENGINEER — DATE: 12 Jun 2009	HANDRAILS STANDARD PLAN NO. SU-11

NOTES:

1. **All pavement restoration work shall also meet the requirements of the City of Tacoma's Right of Way Restoration Policy. See Standard Plan SU-14D for any streets exempt from this policy.**
2. Temporary Surface Restoration:
   Arterials, industrial areas and/or roads with bus traffic: Temporary patches shall be compacted and leveled to a minimum of 3-inches of hot-mix asphalt (HMA).

   Residentials and alleys: Temporary patches shall be compacted and leveled to a minimum of 2-inches of either HMA or cold-mix asphalt. Temporary patches between October 1st and March 31st shall be made with HMA unless otherwise approved.
3. All permanent final patches shall be rectangular in shape and constructed parallel and perpendicular to the road centerline.
4. Where existing pavement defects are in close proximity to the new cut, the inspector may require additional pavement removal to eliminate the pavement defect.
5. The final cut edge of paved surfaces shall be smooth and straight, consistent with grinding or saw cutting devices. No jagged, broken or undermined edges are allowed. Cutting wheel run-out beyond the limits of the opening shall be filled in accordance with WSDOT Standard Specification 5-05.3(8)B for cement concrete surfaces and 5-04.3(5)C for asphalt concrete surfaces.
6. Final compaction of HMA shall be 91% of maximum density.

   Isolated patches: Minimum 1 test per patch up to 150 square feet, and 1 test required every additional 300 square feet, thereafter.

   Trench patches: 1 test every 150 linear feet of trench with a minimum of 2 tests per trench.

   Testing shall be performed by a certified independent testing laboratory or certified tester, as approved by the City's Construction Division. Tests shall be completed and reports identifying the project number submitted to the City Construction Division within 48 hours of test.
7. All joints between the new and original asphalt pavement shall be sealed with hot asphalt or asphalt emulsion and covered with dry paving sand before the asphalt solidifies. Existing surfaces shall be prepared in accordance with WSDOT Standard Specification 5-04.3(5)A prior to placing any new pavement surfaces.
8. Longitudinal construction joints shall only be located at the center or edge of affected lanes.

   Streets and courts 20 feet or less in width and all alleys are considered one-lane streets.

   Non-arterial streets and courts greater than 20 feet in width with no traffic channelization are considered two-lane streets with one-lane either side of the centerline of the street.

   Non-arterial streets greater than 32 feet in width with no traffic channelization may be considered three lane streets upon prior approval from the City Engineer on a case by case basis.
9. Transverse construction joints terminate at the edge of the 2' cut back.
10. For municipal capital improvement projects, cement concrete base pavement shall be in accordance with WSDOT Standard Specification 5-05 for cement concrete pavement. For non-municipal capital improvement projects, concrete shall be a minimum compressive strength of 4,000 PSI.
11. Dowel in accordance with WSDOT Standard Plan A-60.10-00 for arterials, industrial areas, and/or roads with bus traffic. For residential streets the dowel bars may be reduced to 1-inch in diameter. In lieu of dowels, full panel replacement is acceptable.

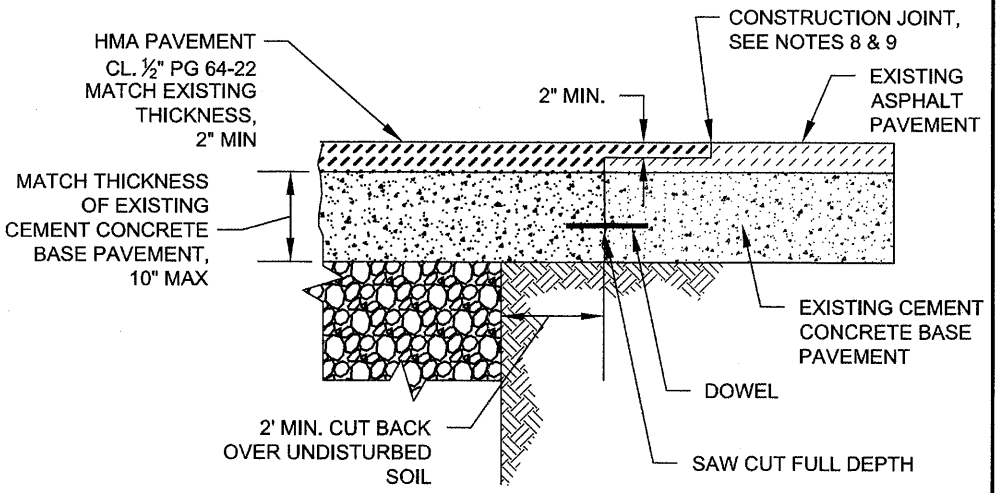

CITY OF TACOMA **DEPARTMENT OF PUBLIC WORKS**	**APPROVED FOR PUBLICATION** CITY ENGINEER DATE 11/30/06	**TYPICAL PAVEMENT RESTORATION FOR ASPHALT OVER CEMENT CONCRETE BASE PAVEMENT** **STANDARD PLAN NO. SU-14A**

NOTES:

1. **All pavement restoration work shall also meet the requirements of the City of Tacoma's Right of Way Restoration Policy. See Standard Plan SU-14E for any streets exempt from this policy.**
2. Temporary Surface Restoration:
   Arterials, industrial areas and/or roads with bus traffic: Temporary patches shall be compacted and leveled to a minimum of 3-inches of hot-mix asphalt (HMA).

   Residentials and alleys: Temporary patches shall be compacted and leveled to a minimum of 2-inches of either hot-mix asphalt or cold-mix asphalt. Temporary patches between October 1st and March 31st shall be made with hot-mix asphalt unless otherwise approved.
3. All permanent final patches shall be rectangular in shape and constructed parallel and perpendicular to the road centerline.
4. Where existing pavement defects are in close proximity to the new cut, the inspector may require additional pavement removal to eliminate the pavement defect.
5. The final cut edge of paved surfaces shall be smooth and straight, consistent with grinding or saw cutting devices. No jagged, broken or undermined edges are allowed. Cutting wheel run-out beyond the limits of the opening shall be filled in accordance with WSDOT Standard Specification 5-05.3(8)B for cement concrete surfaces and 5-04.3(5)C for asphalt concrete surfaces.
6. Final compaction of HMA shall be 91% of maximum density.

   Isolated patches: Minimum 1 test per patch up to 150 square feet, and 1 test required every additional 300 square feet, thereafter.

   Trench patches: 1 test every 150 linear feet of trench with a minimum of 2 tests per trench.

   Testing shall be performed by a certified independent testing laboratory or certified tester, as approved by the City's Construction Division. Tests shall be completed and reports identifying the project number submitted to the City Construction Division within 48 hours of test.
7. All joints between the new and original asphalt pavement shall be sealed with hot asphalt or asphalt emulsion and covered with dry paving sand before the asphalt solidifies. Existing surfaces shall be prepared in accordance with WSDOT Standard Specfication 5-04.3(5)A prior to placing any new pavement surfaces.
8. Longitudinal construction joints shall only be located at the center or edge of affected lanes.

   Streets and courts 20 feet or less in width and all alleys are considered one-lane streets.

   Non-arterial streets and courts greater than 20 feet in width with no traffic channelization are considered two-lane streets with one-lane either side of the centerline of the street.

   Non-arterial streets greater than 32 feet in width with no traffic channelization may be considered three lane streets upon prior approval from the City Engineer on a case by case basis.
9. Transverse construction joints terminate at the edge of the 2' cut back.
10. For municipal capital improvement projects, cement concrete base pavement shall be in accordance with WSDOT Standard Specification 5-05 for cement concrete pavement. For non-municipal capital improvement projects, concrete shall be a minimum compressive strength of 4,000 PSI.

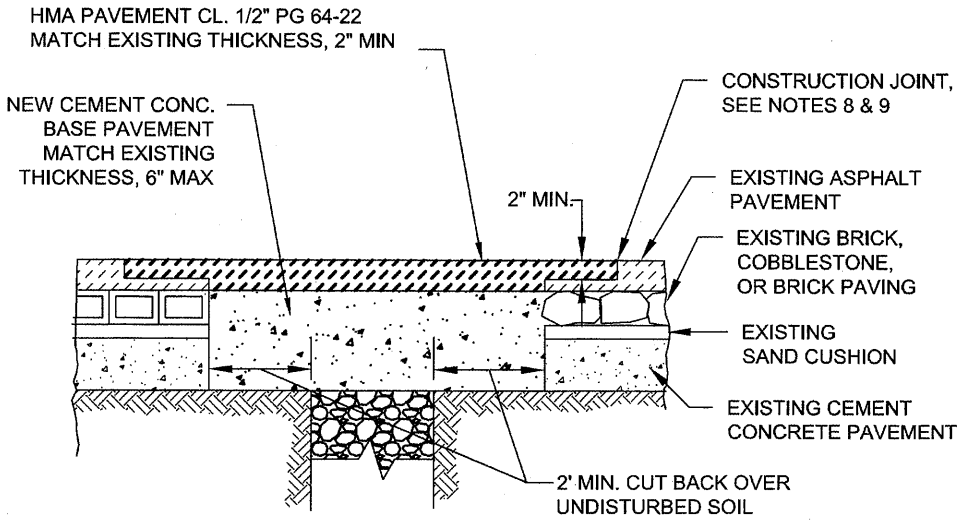

CITY OF TACOMA **DEPARTMENT OF PUBLIC WORKS**	**APPROVED FOR PUBLICATION** CITY ENGINEER DATE 11/30/11	**TYPICAL PAVEMENT RESTORATION FOR ASPHALT OVER RIGID BASE BRICK OR STONE BLOCK PAVEMENT** **STANDARD PLAN NO. SU-14B**

NOTES:

1. **All pavement restoration work shall also meet the requirements of the City of Tacoma's Right of Way Restoration Policy.**
2. Temporary Surface Restoration:

   Arterials, industrial areas and/or roads with bus traffic: Temporary patches shall be compacted and leveled to a minimum of 3-inches of hot-mix asphalt (HMA).

   Residentials and alleys: Temporary patches shall be compacted and leveled to a minimum of 2-inches of either HMA or cold-mix asphalt. Temporary patches between October 1st and March 31st shall be made with HMA unless otherwise approved.
3. All permanent final patches shall be rectangular in shape and constructed parallel and perpendicular to the road centerline.
4. Where existing pavement defects are in close proximity to the new cut, the inspector may require additional pavement removal to eliminate the pavement defect.
5. The final cut edge of paved surfaces shall be smooth and straight, consistent with grinding or saw cutting devices. No jagged, broken or undermined edges are allowed. Cutting wheel run-out beyond the limits of the opening shall be filled in accordance with WSDOT Standard Specification 5-05.3(8)B for cement concrete surfaces and 5-04.3(5)C for asphalt concrete surfaces.
6. Permanent Panel Replacement:

   Arterials, industrial areas and/or roads with bus traffic:
   100% panel replacement is required for all affected panels. Monolithic curbs will be poured at time of panel replacement.

   Residential and Alleys: Panels cut greater than ½ the panel length, width, or total area, including the 2-foot cut back, will require 100% panel replacement. Panels cut less than ½ the panel length, width, or total area, including the 2-foot cut back will require 50% panel replacement. Three-piece panels are not acceptable and will require 100% panel replacement.
7. For municipal capital improvement projects, cement concrete base pavement shall be in accordance with WSDOT Standard Specification 5-05 for cement concrete pavement. For non-municipal capital improvement projects, concrete shall be a minimum compressive strength of 4,000 PSI.
8. Dowel in accordance with WSDOT Standard Plan A-60.10-00 for arterials, industrial areas, and/or roads with bus traffic. In residential streets the dowel bars may be reduced to 1-inch in diameter. In lieu of dowels, full panel replacement is acceptable.

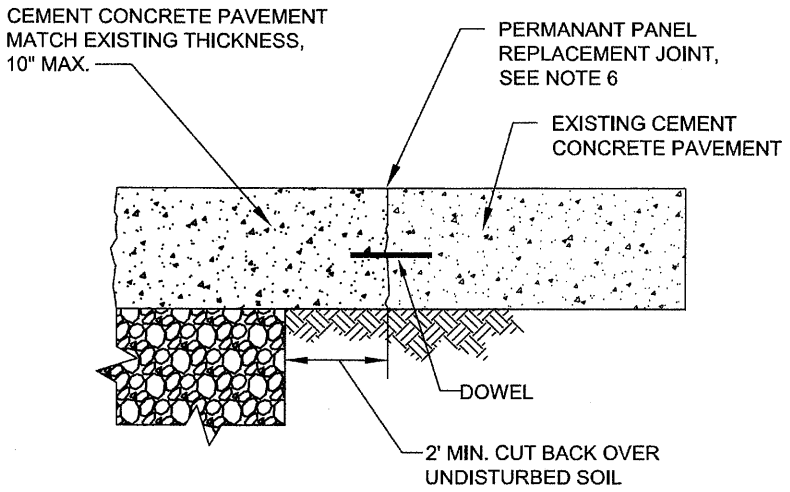

CITY OF TACOMA **DEPARTMENT OF PUBLIC WORKS**	**APPROVED FOR PUBLICATION** CITY ENGINEER 11/30/10 DATE	**TYPICAL PAVEMENT RESTORATION FOR CEMENT CONCRETE PAVEMENT** **STANDARD PLAN NO. SU-14C**

NOTES:

1. **This Standard Plan shall only apply to streets that are exempt from the City of Tacoma's Restoration Policy. See Standard Plan SU-14A for any streets not exempt from this policy.**
2. Temporary Surface Restoration:
   Arterials, industrial areas and/or roads with bus traffic: Temporary patches shall be compacted and leveled to a minimum of 3-inches of hot-mix asphalt (HMA).

   Residentials and alleys: Temporary patches shall be compacted and leveled to a minimum of 2-inches of either HMA or cold-mix asphalt. Temporary patches between October 1st and March 31st shall be made with HMA unless otherwise approved.
3. All permanent final patches shall be rectangular in shape and constructed parallel and perpendicular to the road centerline.
4. Where existing pavement defects are in close proximity to the new cut, the inspector may require additional pavement removal to eliminate the pavement defect.
5. The final cut edge of paved surfaces shall be smooth and straight, consistent with grinding or saw cutting devices. No jagged, broken or undermined edges are allowed. Cutting wheel run-out beyond the limits of the opening shall be filled in accordance with WSDOT Standard Specification 5-05.3(8)B for cement concrete surfaces and 5-04.3(5)C for asphalt concrete surfaces.
6. Final compaction of HMA shall be 91% of maximum density.

   Testing shall be performed by a certified independent testing laboratory or certified tester, as approved by the City's Construction Division. Tests shall be completed and reports identifying the project number submitted to the City Construction Division within 48 hours of test.
7. If remaining pavement adjacent to the patch is less than 3' wide, remove and replace to match existing pavement.
8. All joints between the new and original asphalt pavement shall be sealed with hot asphalt or asphalt emulsion and covered with dry paving sand before the asphalt solidifies. Existing surfaces shall be prepared in accordance with WSDOT Standard Specification 5-04.3(5)A prior to placing any new pavement surfaces.
9. For municipal capital improvement projects, cement concrete base pavement shall be in accordance with WSDOT Standard Specification 5-05 for cement concrete pavement. For non-municipal capital improvement projects, concrete shall be a minimum compressive strength of 4,000 PSI.
10. Dowel in accordance with WSDOT Standard Plan A-60.10-00 for arterials, industrial areas, and/or roads with bus traffic. For residential streets the dowel bars may be reduced to 1-inch in diameter. In lieu of dowels, full panel replacement is acceptable.

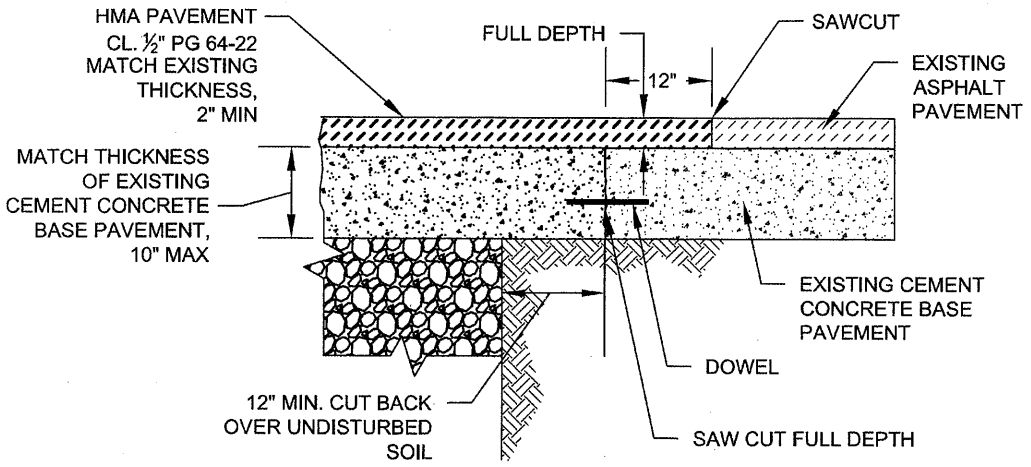

CITY OF TACOMA **DEPARTMENT OF PUBLIC WORKS**	**APPROVED FOR PUBLICATION** CITY ENGINEER DATE 11/20/10	**TYPICAL PAVEMENT RESTORATION FOR ASPHALT OVER CEMENT CONCRETE BASE PAVEMENT** **STANDARD PLAN NO. SU-14D**

NOTES:

1. **This Standard Plan shall only apply to streets that are exempt from the City of Tacoma's Restoration Policy. See Standard Plan SU-14B for any streets not exempt from this policy.**
2. Temporary Surface Restoration:
   Arterials, industrial areas and/or roads with bus traffic: Temporary patches shall be compacted and leveled to a minimum of 3-inches of hot-mix asphalt (HMA).

   Residentials and alleys: Temporary patches shall be compacted and leveled to a minimum of 2-inches of either hot-mix asphalt or cold-mix asphalt.
   Temporary patches between October 1st and March 31st shall be made with hot-mix asphalt unless otherwise approved.
3. All permanent final patches shall be rectangular in shape and constructed parallel and perpendicular to the road centerline.
4. Where existing pavement defects are in close proximity to the new cut, the inspector may require additional pavement removal to eliminate the pavement defect.
5. The final cut edge of paved surfaces shall be smooth and straight, consistent with grinding or saw cutting devices. No jagged, broken or undermined edges are allowed. Cutting wheel run-out beyond the limits of the opening shall be filled in accordance with WSDOT Standard Specification 5-05.3(8)B for cement concrete surfaces and 5-04.3(5)C for asphalt concrete surfaces.
6. Final compaction of HMA shall be 91% of maximum density.

   Testing shall be performed by a certified independent testing laboratory or certified tester, as approved by the City's Construction Division. Tests shall be completed and reports identifying the project number submitted to the City Construction Division within 48 hours of test.
7. All joints between the new and original asphalt pavement shall be sealed with hot asphalt or asphalt emulsion and covered with dry paving sand before the asphalt solidifies. Existing surfaces shall be prepared in accordance with WSDOT Standard Specfication 5-04.3(5)A prior to placing any new pavement surfaces.
8. For municipal capital improvement projects, cement concrete base pavement shall be in accordance with WSDOT Standard Specification 5-05 for cement concrete pavement. For non-municipal capital improvement projects, concrete shall be a minimum compressive strength of 4,000 PSI.

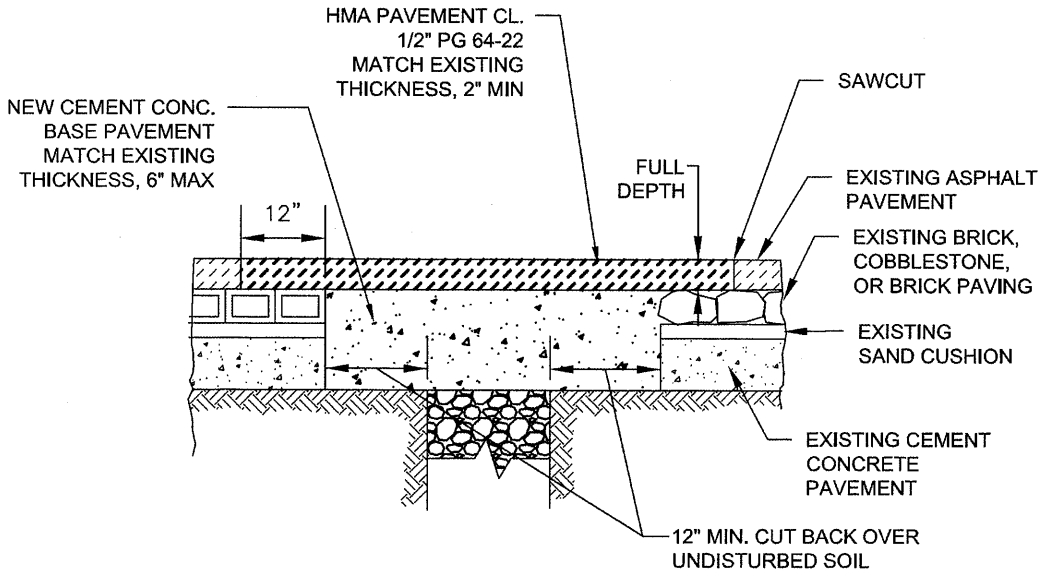

CITY OF TACOMA **DEPARTMENT OF PUBLIC WORKS**	**APPROVED FOR PUBLICATION** CITY ENGINEER DATE 10/20/15	**TYPICAL PAVEMENT RESTORATION FOR ASPHALT OVER RIGID BASE BRICK OR STONE BLOCK PAVEMENT** **STANDARD PLAN NO. SU-14E**

NOTES

1. **All pavement restoration work shall also meet the requirements of the City of Tacoma's Right of Way Restoration Policy. See Standard Plan SU-15B for any streets exempt from this policy.**
2. Temporary Surface Restoration:
   Arterials, industrial areas and/or roads with bus traffic: Temporary patches shall be compacted and leveled to a minimum of 3-inches of hot-mix asphalt (HMA).

   Residentials and alleys: Temporary patches shall be compacted and leveled to a minimum of 2-inches of either HMA or cold-mix asphalt. Temporary patches between October 1st and March 31st shall be made with HMA unless otherwise approved.
3. All permanent final patches shall be rectangular in shape and constructed parallel and perpendicular to the road centerline.
4. Where existing pavement defects are in close proximity to the new cut, the inspector may require additional pavement removal to eliminate the pavement defect.
5. The final cut edge of paved surfaces shall be smooth and straight, consistent with grinding or saw cutting devices. No jagged, broken or undermined edges are allowed. Cutting wheel run-out beyond the limits of the opening shall be filled in accordance with WSDOT Standard Specification 5-05.3(8)B for cement concrete surfaces and 5-04.3(5)C for asphalt concrete surfaces.
6. Final compaction of HMA shall be 91% of maximum density.

   Isolated patches: Minimum 1 test per patch up to 150 square feet, and 1 test required every additional 300 square feet, thereafter.

   Trench patches: 1 test every 150 linear feet of trench with a minimum of 2 tests per trench.

   Testing shall be performed by a certified independent testing laboratory or certified tester, as approved by the City's Construction Division. Tests shall be completed and reports identifying the project number submitted to the City Construction Division within 48 hours of test.
7. All joints between the new and original asphalt pavement shall be sealed with hot asphalt or asphalt emulsion and covered with dry paving sand before the asphalt solidifies. Existing surfaces shall be prepared in accordance with WSDOT Standard Specification 5-04.3(5)A prior to placing any new pavement surfaces.
8. Longitudinal construction joints shall only be located at the center or edge of affected lanes.

   Streets and courts 20 feet or less in width and all alleys are considered one-lane streets. Non-arterial streets and courts greater than 20 feet in width with no traffic channelization are considered two-lane streets with one-lane either side of the centerline of the street.

   Non-arterial streets greater than 32 feet in width with no traffic channelization may be considered three lane streets upon prior approval from the City Engineer.
9. Transverse construction joints terminate at the edge of the 2' cut back.
10. HMA pavement shall not be placed over CDF until approved by the City.

TABLE 1

PAVEMENT REPLACEMENT DEPTH IN CUT BACK ZONE

	MIN.	MAX.
ARTERIALS, INDUSTRIAL AREAS & ROADS WITH BUS TRAFFIC	MATCH EXISTING +1", OR 4", WHICHEVER IS GREATER	6"
RESIDENTIALS AND ALLEYS	MATCH EXISTING +1", OR 3", WHICHEVER IS GREATER	4"

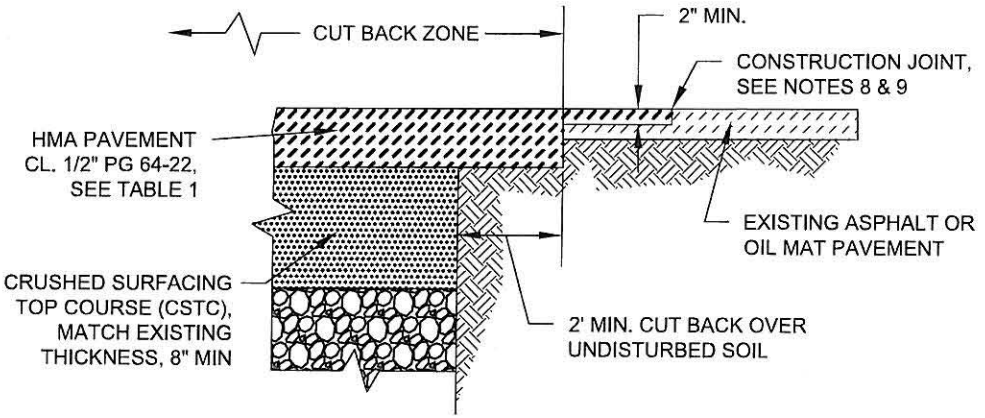

CITY OF TACOMA **DEPARTMENT OF PUBLIC WORKS**	**APPROVED FOR PUBLICATION** CITY ENGINEER — DATE: 12 Jun 2009	**TYPICAL PAVEMENT RESTORATION FOR ASPHALT CONCRETE/OIL MAT PAVEMENT** **STANDARD PLAN NO. SU-15A**

NOTES

1. **This Standard Plan shall only apply to streets that are exempt from the City of Tacoma's Restoration Policy. See Standard Plan SU-15A for any streets not exempt from this policy.**
2. Temporary Surface Restoration:
   Arterials, industrial areas and/or roads with bus traffic: Temporary patches shall be compacted and leveled to a minimum of 3-inches of hot-mix asphalt (HMA).

   Residentials and alleys: Temporary patches shall be compacted and leveled to a minimum of 2-inches of either HMA or cold-mix asphalt. Temporary patches between October 1st and March 31st shall be made with HMA unless otherwise approved.
3. All permanent final patches shall be rectangular in shape and constructed parallel and perpendicular to the road centerline.
4. Where existing pavement defects are in close proximity to the new cut, the inspector may require additional pavement removal to eliminate the pavement defect.
5. The final cut edge of paved surfaces shall be smooth and straight, consistent with grinding or saw cutting devices. No jagged, broken or undermined edges are allowed. Cutting wheel run-out beyond the limits of the opening shall be filled in accordance with WSDOT Standard Specification 5-05.3(8)B for cement concrete surfaces and 5-04.3(5)C for asphalt concrete surfaces.
6. Final compaction of HMA shall be 91% of maximum density.

   Testing shall be performed by a certified independent testing laboratory or certified tester, as approved by the City's Construction Division. Tests shall be completed and reports identifying the project number submitted to the City Construction Division within 48 hours of test.
7. All joints between the new and original asphalt pavement shall be sealed with hot asphalt or asphalt emulsion and covered with dry paving sand before the asphalt solidifies. Existing surfaces shall be prepared in accordance with WSDOT Standard Specification 5-04.3(5)A prior to placing any new pavement surfaces.
8. HMA pavement shall not be placed over CDF until approved by the City.
9. If remaining pavement adjacent to the patch is less than 3' wide, remove and replace with asphalt concrete pavement to match existing (minimum 2").

TABLE 1

PAVEMENT REPLACEMENT DEPTH IN CUT BACK ZONE

	MIN.	MAX.
ARTERIALS, INDUSTRIAL AREAS & ROADS WITH BUS TRAFFIC	MATCH EXISTING +1", OR 4", WHICHEVER IS GREATER	6"
RESIDENTIALS AND ALLEYS	MATCH EXISTING +1", OR 3", WHICHEVER IS GREATER	4"

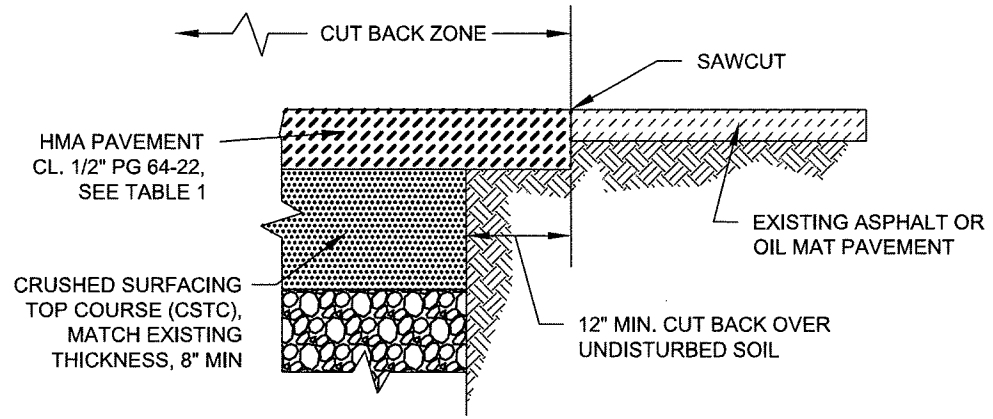

CITY OF TACOMA DEPARTMENT OF PUBLIC WORKS	APPROVED FOR PUBLICATION CITY ENGINEER 7/17/09 DATE	TYPICAL PAVEMENT RESTORATION FOR ASPHALT CONCRETE/OIL MAT PAVEMENT STANDARD PLAN NO. SU-15B

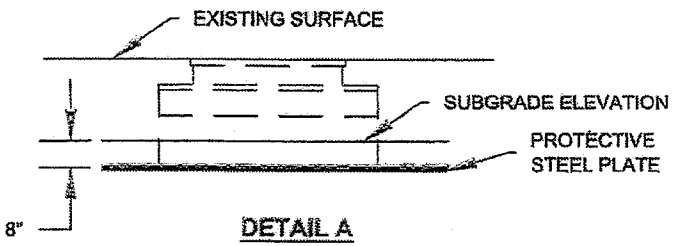

DETAIL A

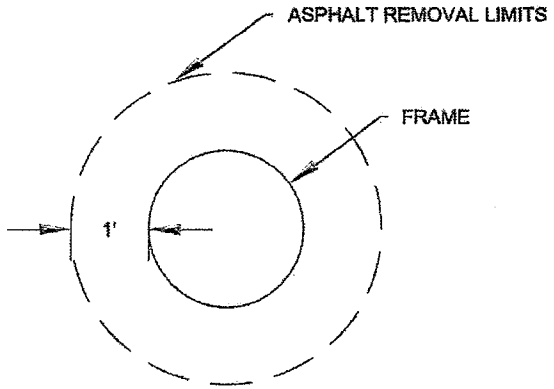

DETAIL B

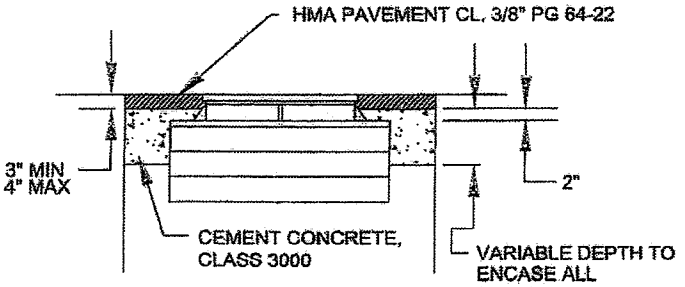

DETAIL C

PROGRESSION OF WORK

PRIOR TO EXCAVATING OR RESURFACING:

Contractor shall:
Remove frame and risers to a depth 8-inches below subgrade.
Install steel protective plate in accordance with Detail A.
Reference the location of the utility structure.

CONSTRUCTION OF SURFACING:

Gravel surfacing:
Install base materials and gravel over protective steel plate.

Asphalt surfacing:
Install base materials and asphalt over protective steel plate.

Concrete surfacing:
Adjust frame and grate to final grade prior to placing concrete surfacing.

UPON COMPLETION OF SURFACING:

The asphalt concrete pavement or gravel surfacing shall be removed in a neat circle in accordance with Detail B.

The location of the asphalt or gravel removal shall be based upon the reference location established by the Contractor.

Crushed surfacing and base materials shall be removed and disposed of to allow the removal of the steel protective plate.

The structure shall be adjusted to finish grade utilizing the same methods of construction as specified for new construction in Section 7-05.

For hot mix asphalt, the area shall then be backfilled with Class 3000 cement concrete to an elevation of 3 to 4 inches below the finished pavement surface. 24-hours after placing the concrete, HMA pavement CL. 3/8" PG 64-22 shall be placed in accordance with Standard Plan No. SU-15.

For gravel surfaces, the area shall then be backfilled with crushed surfacing top course and compacted.

NOTE:

All general provisions, construction and warranty requirements of the Right of Way Restoration Policy will be followed.

CITY OF TACOMA DEPARTMENT OF PUBLIC WORKS	APPROVED FOR PUBLICATION James Parvey 12 Jun 2009 CITY ENGINEER DATE	UTILITY ADJUSTMENT STANDARD PLAN NO. SU-25

COMPACTION TESTING REQUIREMENTS [A]		
DEPTH	TESTING FREQUENCY [C]	
	VERTICAL	HORIZONTAL
SURFACE (BELOW HMA)	N/A	1 TEST EVERY 150 LINEAR FEET OF TRENCH OR MINIMUM 2 PER TRENCH
		1 TEST FOR 150 SQUARE FEET FOR ISOLATED PATCHES[B]
1 TO 4 FEET (OR MIN 18 IN. ABOVE PIPE)	1 EVERY 12 INCHES	SAME AS FOR SURFACE
> 4 FEET TO BOTTOM OF TRENCH	NO SPECIFIC REQUIREMENT - MAY BE REQUIRED BY COT INSPECTOR FOR VERIFICATION OF COMPACTION	

A. TESTING SHALL BE PERFORMED BY A CERTIFIED INDEPENDENT TESTING LABORATORY OR A CERTIFIED TESTOR AS APPROVED BY THE CITY'S CONSTRUCTION DIVISION. THE COST OF TESTING IS THE RESPONSIBILITY OF THE PERMITTEE. TESTS SHALL BE COMPLETED AND REPORTS IDENTIFYING THE PROJECT NUMBER SUBMITTED TO THE CONSTRUCTION DIVISION WITHIN 48 HOURS OF TESTS.

B. ONLY ONE COMPACTION TEST WILL BE REQUIRED FOR MULTIPLE TRENCHES WITHIN A 150 SF AREA PROVIDED COMPACTION PROCEDURES ARE THE SAME.

C. EACH LIFT SHALL BE COMPACTED TO 95% MODIFIED PROCTOR DENSITY, AS VERIFIED BY COMPACTION TESTING, BEFORE PROCEEDING TO THE NEXT LIFT. COT INSPECTOR MAY REQUIRE EXCAVATION AND REMOVAL OF SOIL WHERE COMPACTION IS IN QUESTION.

NOTES:

1. Compact backfill material in max. 12 in. lifts. Compact backfill material to 95% max. modified proctor density (ASTM 1557) except directly over pipe, hand tamp only.
2. Native backfill will require laboratory testing to determine max. modified proctor density. Imported backfill will require submittal of proctor test results from supplier.
3. See WSDOT Standard Specification Section 2-09.3(1)E for material requirements on "Controlled Density Fill" (CDF). CDF may be used for trenches less than 24 in. wide or as approved by the City Engineer. CDF shall be vibrated/compacted.

CITY OF TACOMA
DEPARTMENT OF PUBLIC WORKS

APPROVED FOR PUBLICATION

CITY ENGINEER

11/30/16
DATE

TRENCH BACKFILL
COMPACTION REQUIREMENTS

STANDARD PLAN NO. SU-28

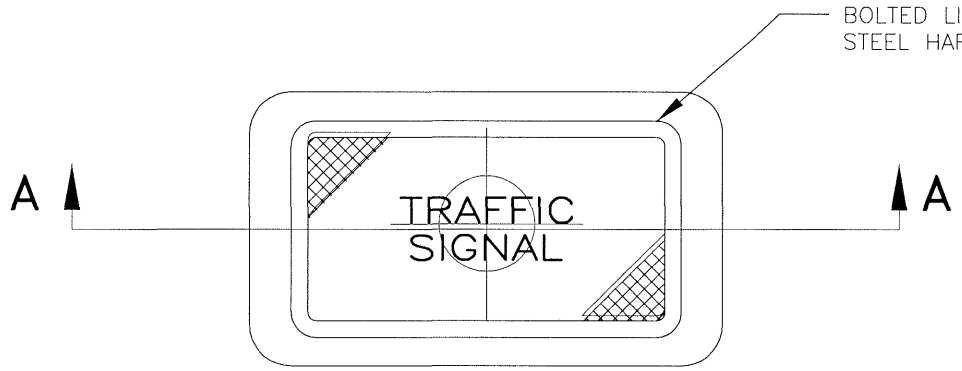

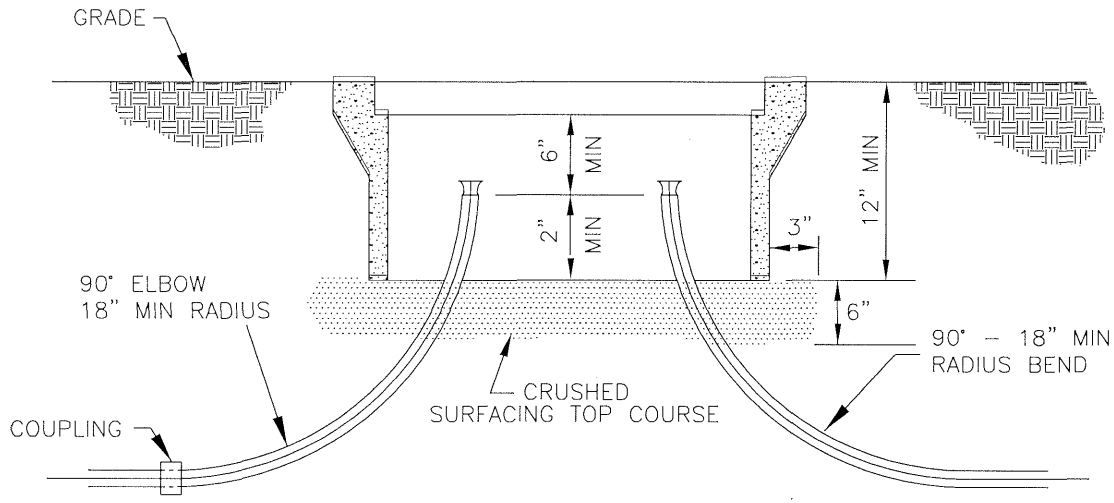

CONDUIT METHOD I

CONDUIT METHOD II

SECTION A–A

NOTES:

JUNCTION BOXES SHALL BE CONCRETE WITH LOCKING POLYMER CONCRETE OR CAST–IRON LIDS. LIDS SHALL BE RATED FOR TRAFFIC AND SHALL HAVE A NONSKID SURFACE. THE LIDS SHALL HAVE AN EDGE THICKNESS OF 1–3/4" AND BE APPROXIMATELY 10–1/8" x 15–1/4" FOR A STANDARD JUNCTION BOX AND 13–1/8" x 22–1/8" FOR A LARGE JUNCTION BOX. THE LID SHALL BE MARKED "TRAFFIC SIGNAL", "STREETLIGHTING", OR OTHER DESIGNATION AS CALLED FOR ON THE PROPOSAL. THE BODY OF THE BOX SHALL BE A MINIMUM OF 12 INCHES HIGH.

EITHER METHOD SHOWN IS ACCEPTABLE FOR PLASTIC OR METAL CONDUIT. IF PIPE BENDER IS NOT AVAILABLE USE COUPLING AND STANDARD 90° BEND. BOX SHALL SET ON A 6 INCH CRUSHED SURFACING TOP COURSE FOR DRAINAGE.

CARE SHALL BE TAKEN TO PLACE JUNCTION BOXES OUT OF AREAS HEAVILY USED BY PEDESTRIANS, ESPECIALLY NEAR CROSSWALKS AND CORNERS.

METAL COVERS SHALL BE GROUNDED. GROUND CONNECTION SHALL BE MINIMUM 24" LONG.

JUNCTION BOXES SHALL NOT BE PLACED IN CURB RAMPS OR AREAS SUBJECT TO VEHICULAR TRAFFIC.

ADJACENT JUNCTION BOXES SHALL BE SEPARATED BY A MINIMUM OF THREE (3) INCHES.

CONDUIT SHALL BE PLACED WITHIN 3" OF THE BOX WALL NEAREST ITS ENTRY LOCATION. INSTALL PULLING BELLS OR BUSHINGS ON CONDUIT ENDS.

JUNCTION BOXES SHALL BE RATED FOR 8000 POUND LOAD ON COVER.

CITY OF TACOMA DEPARTMENT OF PUBLIC WORKS	APPROVED FOR PUBLICATION CITY ENGINEER 3/11/04 DATE	JUNCTION BOX INSTALLATION TYPICAL STANDARD PLAN NO. TS–08

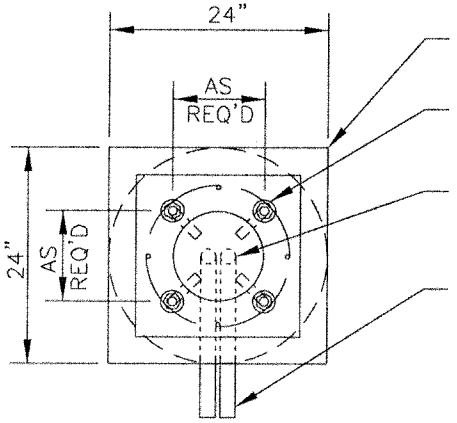

TOOL FINISH TOP AND EDGES

4EA ANCHOR BOLTS
MINIMUM TOP 8" OF BOLT SHALL BE GALVANIZED (AASHTO M111)

CONDUIT SHALL BE CENTERED ON POLE W/CLEARANCE FOR COUPLINGS/PULLING BELLS

THERE SHALL BE A MINIMUM OF TWO CONDUITS IN EACH FOUNDATION. CONDUIT SHALL HAVE 18" RADIUS AND BE ORIENTED TO MINIMIZE CONDUIT BENDS.

DESIGN BASED ON INSTALLATION IN MINIMUM 3000 PSF SOIL WITH SINGLE LUMINAIRE ON 10 FOOT ARM. INSTALLATIONS NOT MEETING THESE PARAMETERS ARE SUBJECT TO ENGINEERING REVIEW.

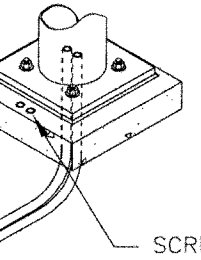

SCRIBE A CIRCLE WITH END OF CONDUIT ABOVE EACH CONDUIT ENTERING THE FOUNDATION.

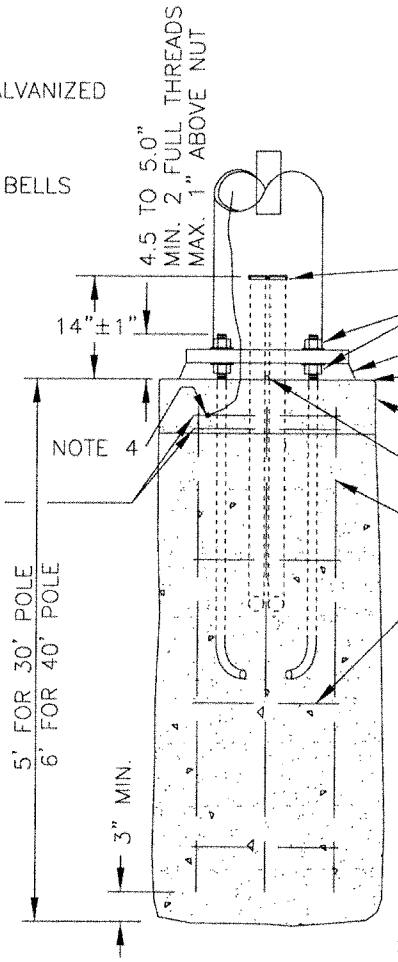

NOTES:

1. FOUNDATIONS SHALL BE INSTALLED IN 24" AUGERED HOLE IN UNDISTURBED MATERIAL. WHERE PRE-CAST BASES ARE USED, THE INSTALLATION SHALL BE REVIEWED AND APPROVED BY THE ENGINEER. ENTIRE HOLE SHALL BE BACKFILLED WITH CDF OR OTHER COMPACTIBLE MATERIAL APPROVED BY THE ENGINEER.
2. CALL FOR UTILITY LOCATION BEFORE DIGGING (1-800-424-5555)
3. ALL STEEL TO HAVE 3" MINIMUM CONCRETE COVER. HOOPS SHALL HAVE 135° HOOKS. ANCHOR BOLTS MAY BE SECURED TO HOOPS.
4. BOND CAGE TO GROUND LUG.

CITY OF TACOMA
DEPARTMENT OF PUBLIC WORKS

APPROVED FOR PUBLICATION

CITY ENGINEER — DATE 2/4/03

3/10/03

STREETLIGHT FOUNDATION 30' & 40'

STANDARD PLAN NO. SL-02

NOTES:

1. INTERCEPT EXISTING CONDUIT, WHERE APPLICABLE, AND ROUTE TOWARD LIGHT STANDARD. TERMINATE CONDUIT(S) APPROXIMATELY 12" FROM BASE OF STANDARD. SEAL END OF CONDUITS WITH TAPE.
2. COIL THREE FEET OF WIRE AT END OF CONDUIT BEFORE ENTERING BASE OF STANDARD.
3. ROUTE WIRE UP TO TERMINAL BLOCK WITHOUT SPLICING.
4. MINIMUM AUGER SIZE IS 12". BACKFILL WITH CRUSHED SURFACING TOP COURSE. TAMP IN 6 INCH LIFTS.
5. SQUARE POLE TO CURB ±3 DEGREES.

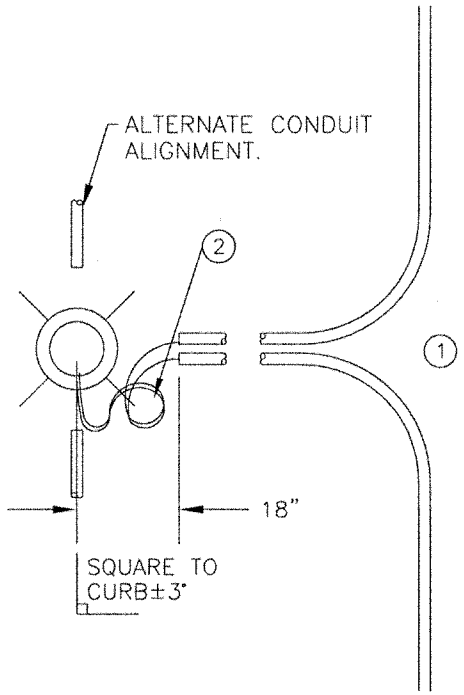

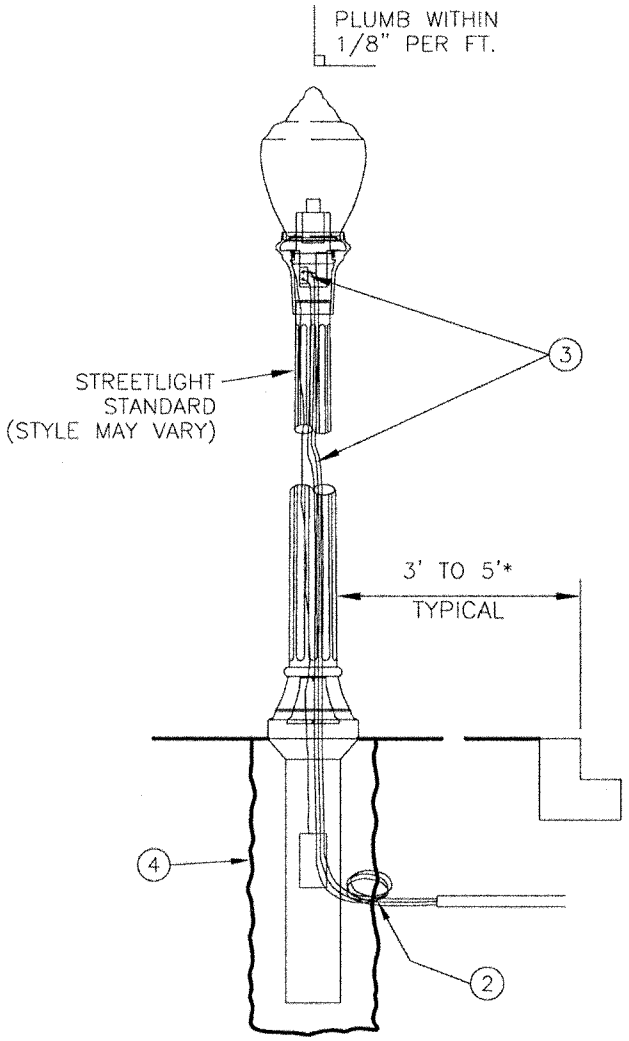

* OR AS DETERMINED BY ENGINEER

CITY OF TACOMA **DEPARTMENT OF PUBLIC WORKS**	**APPROVED FOR PUBLICATION** CITY ENGINEER — DATE 2/4/03 (3/10/03)	**STREETLIGHT** **STANDARD EMBEDDED TYPE** **INSTALLATION DETAIL-TYPICAL** **STANDARD PLAN NO. SL-03**

STREETLIGHTING TAP

FOR USE IN BASE OF STANDARDS

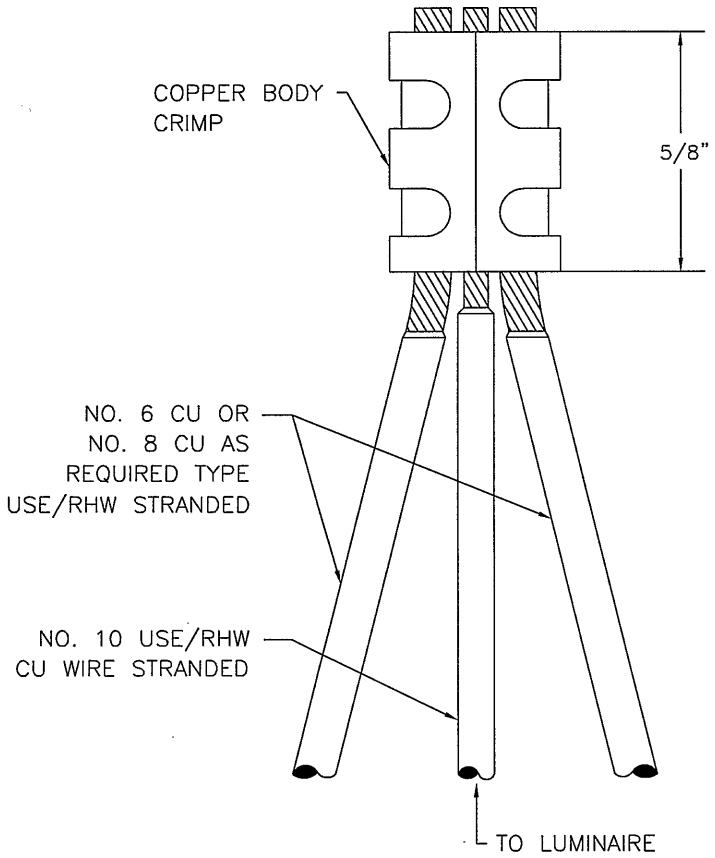

FIGURE A

TAPING INSTRUCTIONS

1. MAKE SPLICE AS SHOWN IN FIGURE A
2. APPLY TAPE AS SHOWN IN FIGURE A APPLY TAPE AND "SCOTHKOTE" MOISTURE RESISTANT ELECTRICAL COATING OVER ENTIRE SPLICE AREA.
3. ATTACH CABLE TIE A MINIMUM OF 2" FROM THE PRESSURE CONNECTOR AS SHOWN IN FIGURE B.
4. APPLY SECOND COAT OF VARNISH.

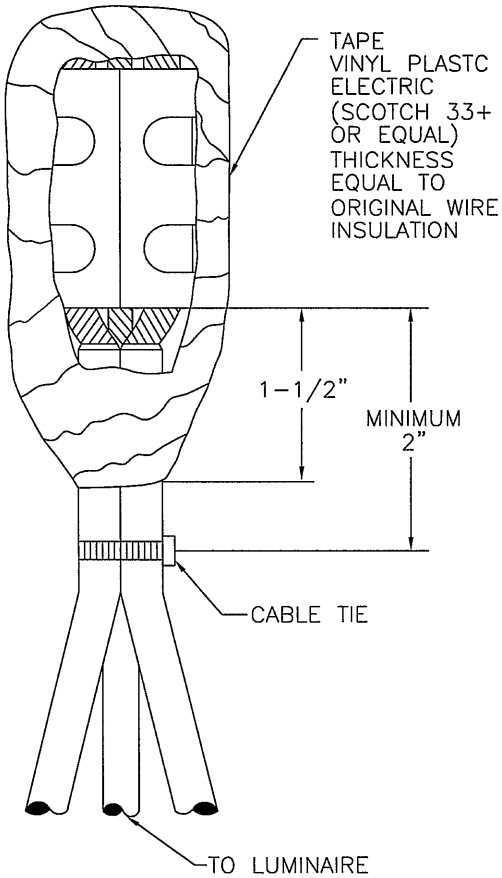

FIGURE B

CITY OF TACOMA **DEPARTMENT OF PUBLIC WORKS**	**APPROVED FOR PUBLICATION** CITY ENGINEER DATE 2/4/03	**STREETLIGHT SPLICE FOR HANDHOLES** **STANDARD PLAN NO. SL-05**

PART IV

CITY OF TACOMA
SMALL BUSINESS ENTERPRISE
PROGRAM

SBE GOAL UTILIZATION FORM

SMALL BUSINESS ENTERPRISE REQUIREMENTS & PROCEDURES:

All bidders must complete and submit with their bid the following solicitation forms contained in the bid submittal package:

City of Tacoma – SBE Utilization Form to receive SBE usage **AND**
City of Tacoma – Prime Contractor's Pre-Work Form

IMPORTANT NOTE:

It is the bidder's responsibility to insure that the SBE subcontractor(s) listed on the SBE Utilization Form are currently certified by the City of Tacoma at the time of bid opening. This may be verified by contacting the SBE Program Office at 253-591-5224 or 253-573-2435 between 8 AM and 5 PM, Monday through Friday. This form must have clear expression of SBE participation your company will use on this project. Ordinance 1.07, passed by the City Council on December 15, 2009, establishes the overall SBE goal of 22%, *except where modified through appropriate procedures*. Please refer to the City of Tacoma SBE Provisions included elsewhere in these Special Provisions.

SBE GOAL: 10%

The following bid items were used to calculate the above SBE goal:

Traffic Control, Clearing and Grubbing, Removal/Disposal, landscaping and some signage were a sample of scopes of work considered.

This is NOT an all-inclusive list. Bidders are free to identify any additional bid items that you deem appropriate to attain the above **10% SBE goal**. A list of SBE companies is available on the following City of Tacoma web site address:

www.cityoftacoma.org

MATERIAL MISSTATEMENTS CONCERNING COMPLETED ACTIONS BY THE BIDDER IN ANY SWORN STATEMENT OR FAILURE TO MEET COMMITMENTS AS INDICATED ON THE SBE UTILIZATION FORM MAY RENDER THE BIDDER IN DEFAULT OF CITY ORDINANCE 1.07

City of Tacoma
Community & Economic Development
Office of Small Business Enterprise
747 Market Street, Rm 900
Tacoma WA 98402
253-591-5224 or 253-573-2435

SBE UTILIZATION FORM

This form is to document only the SBE subcontractors or material suppliers that will be awarded a contract. This information will be used in calculating the **EVALUATED BID**. Additional forms may be used if needed.

- Prime contractors are encouraged to solicit bids from SBE approved firms.
- Be sure to include this form with your bid submittal in order to receive SBE credit.
- It is the prime contractor's responsibility to check the certification status of SBE subcontractors prior to the submittal deadline.

Bidder's Name:_____

Address:_____ City/State/Zip: _____

Spec. No. _____ Base Bid * $_____ Are You a SBE Mentor? ** ☐ Yes ☐No Are you using any SBE firms? ☐ Yes ☐ No

Complete company names and phone numbers are required to verify your SBE usage.

a. **Company Name and Telephone Number**	**b.** **Scope of Work, Services or Supplies/Materials Provided**	**c.** **Bid Amount**	**d.** **Subcontractor (100%)**	**e.** **Material Supplier (20%)**	**f.** **Actual SBE Usage Dollar Amount**
	Enter Total of Actual SBE Usage Dollar Amount $ ***				
Block g. Actual SBE Usage as a percent of the Base Bid: %			**Block h.** Total SBE Usage: %		

By signing and submitting this form the bidder certifies that the SBE firms listed will be used on this project including all applicable change orders.

_____ _____ _____

Type or Print Name of Responsible Officer / Title **Signature of Responsible Officer** **Date**

INSTRUCTIONS FOR COMPLETING
SBE UTILIZATION FORM

The purpose of these instructions is to assist bidders in properly completing the SBE Utilization Form.

This form when submitted with your bid provides information to the City of Tacoma to accurately review and evaluate your proposed SBE usage.

1. * Base Bid is the prime contractor's bid, plus any alternates, additives and deductive selected by the City. Also, please refer to Item #9 below.

2. **Note: As a SBE Mentor you can receive up to 50% of the identified SBE goal that may be applied towards your SBE usage. Please check (√) appropriate field on the SBE Utilization Form.

3. *** This amount should total all dollar amounts included in Column "f."

4. Column "a" – List all SBE companies that you will be awarding a contract to if you are the successful bidder.

5. Column "b" – List the scope of work or services for each subcontractor **OR** list the materials/supplies provided.

6. Column "c" – The bid amount must be indicated for ***all*** listed **SBE** subcontractors and material suppliers that you plan on doing business with. This quote is the price that you and the subcontractor have negotiated prior to bid opening.

7. Column "d" – Indicate with a checkmark (√) if the SBE will serve as a subcontractor.

8. Column "e" – Indicate with a checkmark (√) if the SBE is a material supplier.

9. Column "f" – Actual SBE Usage Dollar Amount: Multiply the amount in Column "c" by 1.0 if subcontractor (d) is checked (√) OR by 0.20 if Material Supplier (e) is checked (√). Insert the total amount in this column.

10. Block "g" – The percent of actual SBE usage calculated on the Base Bid only and does not include any additional credit for being a SBE Mentor. (Divide your Total Actual SBE Usage Dollar Amount (Column "f") by your Base Bid (*) then multiply by 100 to get a percentage: $ amounts from column "f" divided by Base Bid (*) x 100 = SBE usage as a percent of the Base Bid.)

11. Block "h" – Total SBE usage is the percent of "Actual SBE Usage" (Column f) <u>plus</u> up to 50% of **identified** SBE goal as a mentorship credit <u>when applicable.</u>

12. Whether or not you have SBE participation this form **MUST** be submitted with your bid proposal package to receive SBE usage.

It is the prime contractor's responsibility to check the status of SBE subcontractors prior to bid opening. Call the SBE Office at 253-591-5224 or 253-573-2435 for additional information.

City of Tacoma
Community & Economic Development
Office of Small Business Enterprise
747 Market Street, Room 900
Tacoma, WA 98402
253-591-5224 or 253-573-2435

PRIME CONTRACTOR'S PRE-WORK FORM

Company Name _____ **Telephone** _____

Address/City/State/Zip Code _____

Specification Number _____ **Specification Title** _____

JOB CATEGORIES SPECIFY	TOTAL EMPLOYEES		TOTAL MINORITY EMPLOYEES		BLACK		ASIAN		AMERICAN INDIAN		HISPANIC	
	M	F	M	F	M	F	M	F	M	F	M	F
Officer / Managers												
Supervisors												
Project Managers												
Office / Clerical												
Apprentices												
Trainees												
TOTALS												

CONTRACTOR'S PROJECTED WORK FORCE - THIS PROJECT

Superintendent												
Foreman												
Operators												
Laborers												
Apprentice												
Trainee												
TOTALS												

Type or Print Name of Responsible Officer / Title _____ **Signature of Responsible Officer** _____ **Date** _____

INSTRUCTIONS FOR COMPLETING
PRIME CONTRACTOR'S PRE-WORK FORM

This form only applies to employees who will be working on this specific project.

1. "Heading" the company name and address should reflect the subcontractor actually doing business with the City of Tacoma. If this address is different from that of the Equal Employment Opportunity Officer that administers the EEO programs of the company, the Equal Employment Opportunity Officer's address should be noted in the "Comments" section at the bottom of the form. "Telephone" should contain the area code, telephone number and extension (if any) for the Equal Employment Officer or the responsible official.

2. "Job Categories" at the extreme left hand column of the form specifying "Job Categories" lists "Officials & Managers." You are to list in addition to Officials & Managers any appropriate job titles such as Sales Workers, Office/Clerical, Professionals, Technical, etc., as they apply to your own company and only as pertains to this specific project.

3. The "M" and "F" headings at the top of each column refer to "Male" and "Female."

4. The "Total Employees" column should list the total number of male employees under "M" and the total female number of female employees under "F" for each job category listed. They should be listed in a similar manner in the "Total" category at the bottom of the form. The "Total Employees" column should include all those employees listed under "Non-Minority" and "Total Minorities." "Non-Minority" should include all employees not listed in the minority columns.

5. "Total Minorities" should include all employees listed under the "Black," "Asian," "American Indian," and "Hispanic" columns. These columns should include only employees who are members of that particular minority group. Designation and definitions of ethnic/national origin status follow the instructions and definitions of the Federal EEO-1 Form of the U. S. Equal Employment Opportunity Commission.

6. "Totals" this line should reflect the total of all lines in each of the above columns.

7. The signature of your company's designated responsible official or similar official responsible for equal employment opportunity must appear in the designated space at the bottom of the form. Please PRINT OR TYPE the person's name on the top line across from the signature. This is required since some signatures are difficult to read.

8. "Comments" this section is to be used as needed for explanations to under utilization rate or lack of turnover, proposed expansion or reduction of staff or any other pertinent information you believe will help clarify or explain the data presented on the form. If you need additional space, please explain on a separate sheet of paper.

9. If you need assistance or have questions regarding the completion of this form, please call the SBE Office at 253-591-5224 or 253-573-2435

Chapter 1.07

SMALL BUSINESS ENTERPRISE

Sections:

1.07.010 Policy and purpose.
1.07.020 Definitions.
1.07.030 Discrimination prohibited.
1.07.040 Program administration.
1.07.050 Certification.
1.07.060 Program requirements.
1.07.070 Evaluation of submittals.
1.07.080 Contract compliance.
1.07.090 Program monitoring.
1.07.100 Enforcement.
1.07.110 Remedies.
1.07.120 Unlawful acts.
1.07.130 Severability.
1.07.140 Sunset and review of program.

1.07.010 Policy and purpose.

It is the policy of the City of Tacoma that citizens be afforded an opportunity for full participation in our free enterprise system and that historically underutilized business enterprises shall have an equitable opportunity to participate in the performance of City contracts. The City finds that in its contracting for supplies, services and public works there has been historical underutilization of small businesses located in certain geographically and economically disfavored locations and that this underutilization has had a deleterious impact on the economic well-being of the City. The purpose of this chapter is to remedy the effects of such underutilization through use of reasonably achievable goals to increase opportunities for historically underutilized businesses to participate in City contracts. It is the goal of this chapter to facilitate a substantial procurement, education, and mentorship program designed to promote equitable participation by historically underutilized businesses in the provision of supplies, services, and public works to the City. It is not the purpose of this chapter to provide any person or entity with any right, privilege, or claim, not shared by the public, generally, and this chapter shall not be construed to do so. This chapter is adopted in accordance with Chapter 35.22 RCW and RCW 49.60.400.

(Ord. 27867 Ex. A; passed Dec. 15, 2009)

1.07.020 Definitions.

Terms used in this chapter shall have the following meanings unless defined elsewhere in the Tacoma Municipal Code ("TMC"), or unless the context in which they are used clearly indicates a different meaning.

A. "Base Bid" means a Bid for Public Works to be performed or Supplies or Services to be furnished under a City Contract, including additives, alternates, deductives, excluding force accounts, and taxes collected separately pursuant to Washington Administrative Code ("WAC") 458-20-171.

B. "Bid" means an offer submitted by a Respondent to furnish Supplies, Services, and/or Public Works in conformity with the Specifications and any other written terms and conditions included in a City request for such offer.

C. "Bidder" means an entity or individual who submits a Bid, Proposal or Quote. See also "Respondent."

D. "City" means all Departments, Divisions and agencies of the City of Tacoma.

E. "Contract" means any type of legally binding agreement regardless of form or title that governs the terms and conditions for procurement of Public Works and Improvements and/or Non-Public Works and Improvements Supplies and Services. Contracts include the terms and conditions found in Specifications, Bidder or Respondent Submittals, and purchase orders issued by the City. A "Contract" as used in this chapter shall include an agreement between the City and a non-profit entity to perform construction-related services for Public Works. A "Contract" does not include: (1) awards made by the City with federal/state grant or City general funds monies to a non-profit entity where the City offers assistance, guidance, or supervision on a project or program, and the recipient of the grant awards uses the grant moneys to provide services to the community; (2) sales transactions where the City sells its personal or real property; (3) a loan transaction where the City is acting as a debtor or a creditor; (4) lease, franchise; (5) agreements to use City real property (such as Licenses, Permits and Easements) and, (6) banking and other financial or investment services.

F. "Contractor" means any Person that presents a Submittal to the City, enters into a Contract with the City, and/or performs all or any part of a Contract awarded by the City, for the provision of Public Works, or Non-Public Works and Improvements, Supplies or Services.

G. "Evaluated Bid" means a Bid that factors each Respondent's Base Bid including any alternates, deductive and additives selected by the City that will result in a weighed reduction based on that Respondent's percentage of SBE participation, as defined by formula set forth in this chapter or in the SBE Regulations adopted pursuant to this chapter.

H. "Goals" means the annual level of participation by SBEs in City Contracts as established in this chapter, the SBE Regulations, or as necessary to comply with applicable federal and state nondiscrimination laws and regulations. Goals for individual Contracts may be adjusted as provided for in this chapter and shall not be construed as a minimum for any particular Contract or for any particular geographical area.

I. "Lowest and Best Responsible Bidder" means the Bidder submitting the lowest Bid received that is within the range of acceptable bids, that also has the ability to timely perform the Contract bid upon considering such factors as financial resources, skills, quality of materials, past work record, and ability to comply with state, federal, and local requirements, including those set forth in the SBE Regulations.

J. "Non-Public Works and Improvements" means all competitively solicited procurement of Supplies and/or Services by the City not solicited as Public Works.

K. "Person" means individuals, companies, corporations, partnerships, associations, cooperatives, any other legally recognized business entity, legal representative, trustee, or receivers.

L. "Proposal" means a written offer to furnish Supplies or Services in response to a Request for Proposals. This term may be further defined in the Purchasing Policy Manual and/or in competitive solicitations issued by the City.

M. "Public Works (or "Public Works and Improvements)" means all work, construction, alteration, repair, or improvement other than ordinary maintenance, executed at the cost of the City, or that is by law a lien or charge on any property therein. This term includes all Supplies, materials, tools, and equipment to be furnished in accordance with the Contract for such work, construction, alteration, repair, or improvement.

N. "Quote" means a competitively solicited written offer to furnish Supplies or Services by a method of procurement that is less formalized than a Bid or a Proposal. This term may be further defined in the Purchasing Policy Manual.

O. "Respondent" means any entity or Person, other than a City employee, that provides a Submittal in response to a request for Bids, Request for Proposals, Request for Qualifications, request for quotes or other request for information, as such terms are defined in Section 1.06.251 TMC. This term includes any such entity or Person whether designated as a supplier, seller, vendor, proposer, Bidder, Contractor, consultant, merchant, or service provider that; (1) assumes a contractual responsibility to the City for provision of Supplies, Services, and/or Public Works; (2) is recognized by its industry as a provider of such Supplies, Services, and/or Public works; (3) has facilities similar to those commonly used by Persons engaged in the same or similar business; and/or (4) distributes, delivers, sells, or services a product or performs a Commercially Useful Function.

P. "SBE Certified Business" (or "SBEs") means a business that meets the criteria set forth in Section 1.07.050 of this chapter and has been certified as meeting that criteria by the Community and Economic Development Department – SBE Program Coordinator.

Q. "SBE Program Coordinator" means the individual appointed, from time to time, by the City's Community and Economic Development Director to administer the SBE Regulations.

R. "SBE Regulations" means the written regulations and procedures adopted pursuant to this chapter for procurement of Supplies, Services, and Public Works.

S. "Services" means non-Public Works and Improvements services and includes professional services, personal services, and purchased services, as such terms are defined in Section 1.06.251 TMC and/or the City's Purchasing Policy Manual.

T. "Submittal" means Bids, Proposals, Quotes, qualifications or other information submitted in response to requests for Bids, Requests for Proposals, Requests for Qualifications, requests for Quotations, or other City requests for information, as such terms are defined in Section 1.06.251 TMC.

U. "Supplies" means materials, Supplies, and other products that are procured by the City through a competitive process for either Public Works procurement or Non-Public Works and Improvements procurement unless an approved waiver has been granted by the appropriate authority.

(Ord. 28141 Ex. A; passed Mar. 26, 2013: Ord. 27867 Ex. A; passed Dec. 15, 2009)

1.07.030 Discrimination prohibited.

A. No person that is engaged in the construction of public works for the City, engaged in the furnishing of laborers or craftspeople for public works of the City, or is engaged for compensation in the provision of non-public works and improvements supplies and/or services to the City, shall discriminate against any other person on the basis of race, religion, color, national origin or ancestry, sex, gender identity, sexual orientation, age, marital status, familial status, or the presence of any sensory, mental or physical disability in employment. Such discrimination includes the unfair treatment or denial of normal privileges to a person as manifested in employment upgrades, demotions, transfers, layoffs, termination, rates of pay, recruitment of employees, or advertisement for employment.

B. The violation of the terms of RCW 49.60 or Chapter 1.29 TMC by any person that is engaged in the construction of public works for the City, is engaged in the furnishing of laborers or craftspeople for public works of the City, or is engaged for compensation in the provision of non-public works and improvements supplies and/or services shall result in the rebuttable presumption that the terms of this chapter have also been violated. Such violation may result in termination of any City contract the violator may have with the City and/or the violator's ineligibility for further City Contracts.

(Ord. 27867 Ex. A; passed Dec. 15, 2009)

1.07.040 Program administration.

A. The Community and Economic Development Director, or his or her designated SBE Program Coordinator, shall be responsible for administering this chapter and obtaining compliance with respect to contracts entered into by the City and/or its contractors. It shall be the duty of the Director to pursue the objectives of this chapter by conference, conciliation, persuasion, investigation, or enforcement action, as may be necessary under the circumstances. The Director is authorized to implement an administrative and compliance program to meet these responsibilities and objectives.

B. The Director is hereby authorized to adopt and to amend administrative rules and regulations known as the SBE Regulations to properly implement and administer the provisions of this chapter. The SBE Regulations shall be in conformance with City of Tacoma policies and state and federal laws and be designed to encourage achievement of the SBE goals set forth herein. The SBE Regulations shall become effective following public notice and an opportunity to comment by the public.

C. The SBE Regulations adopted pursuant to this section are for the administrative and procedural guidance of the officers and employees of the City and are further expressions of the public policy of the City. The SBE Regulations, when adopted, shall not confer an independent cause of action or claim for relief cognizable in the courts of the state of Washington or the United States of America to any third parties, and such provisions shall not be used as the basis for a lawsuit in any court of competent jurisdiction challenging the award of any contract by the City.

(Ord. 28141 Ex. A; passed Mar. 26, 2013: Ord. 28110 Ex. B; passed Dec. 4, 2012: Ord. 27867 Ex. A; passed Dec. 15, 2009)

1.07.050 Certification.

A. The SBE Program Coordinator shall approve a person as a SBE Certified Business if all of the following criteria are satisfied:

1. Each person with an ownership interest in the company has a personal net worth of less than $375,000, excluding one personal residence and the net worth of the business;

2. The company's total gross receipts for any consecutive three year period within the last six years is not more than $8,000,000 for public works companies and not more than $4,000,000 for non-public works and improvements companies;

3. The owner(s) of the company executes an affidavit and files it with the City which states that all information submitted on the SBE application is accurate, that the business has sought or intends to do business with the City and/or within the Pierce County area and has experienced or expects to experience difficulty competing for such business due to financial limitations that impair its ability to compete against larger firms; and

4. The company can demonstrate that it also meets at least one of the following additional requirements:

a. The company's business offices, or the personal residence of the owner, is located within a City of Tacoma designated Community Empowerment Zone, prior to designation as a SBE, or

b. The company's business offices, or the personal residence of the owner, is located within the City of Tacoma for at least six months prior to designation as a SBE; or

c. The company's business offices are located in a federally designated HUBZone in Pierce County or any adjacent county for at least 12 months prior to designation as a SBE; or

d. The company's business offices are located in a federally designated HUBZone in a County wherein the work will be performed, or an adjacent county, for at least 12 months prior to designation as a SBE.

B. Application Process. The SBE Program Coordinator shall make the initial determination regarding certification or recertification. Each SBE applicant shall provide the following documents; as such documents are more fully described in the SBE Regulations, to the SBE Program Coordinator:

1. A completed Statement of Personal Net Worth form;

2. A completed Declaration of SBE Status Affidavit form;

3. Tax returns for the business for six (6) years prior to the date of application for SBE certification, or from the date of inception of the business if the business has been in existence less than six (6) years;

4. List of equipment and vehicles used by the SBE;

5. Description of company structure and owners;

6. Such additional information as the SBE Program Coordinator or designee may require.

When another governmental entity has an equivalent SBE classification process the City may enter into an interlocal cooperative agreement for mutual recognition of certifications.

C. Recertification. A SBE qualified business shall demonstrate annually to the satisfaction of the SBE Program Coordinator that the following SBE qualifications are still in effect for such business:

1. That the company still meets all of the criteria set forth in subsection 1.07.050.A. TMC, and

2. That the company has maintained all applicable and necessary licenses in the intervening period, and

3. That the company demonstrates that the owner and/or designated employees have completed the minimum annual continuing business education training requirements set forth in the SBE Regulations.

D. Appeals. The applicant may appeal any certification determination by the SBE Program Coordinator under this chapter to the Director. The appeal must be made in writing and must set forth the specific reasons for the appeal. The Director shall make a decision on the appeal request within a reasonable time, which decision shall be final unless further appeal is made to the Hearing Examiner. In that event, the Hearing Examiner Rules of Procedure for Hearings, Chapter 1.23 TMC, shall be applicable to that appeal proceeding.

(Ord. 28147 Ex. A; passed May 7, 2013: Ord. 28141 Ex. A; passed Mar. 26, 2013: Ord. 28110 Ex. B; passed Dec. 4, 2012: Ord. 27867 Ex. A; passed Dec. 15, 2009)

1.07.060 Program requirements.

A. Establishment of Annual SBE Goals. The SBE Regulations adopted pursuant to this chapter shall state reasonably achievable cumulative annual goals for utilization of SBEs in the provision of supplies, services, and public works procured by the City. Cumulative annual goals for the participation of SBEs in City contracts shall be based on the number of qualified SBEs operating within Pierce County or in a county that is adjacent to Pierce County or in a HUBZone in a county where the supplies, services and/or public works will be delivered or performed. The dollar value of all contracts awarded by the City to SBEs in the procurement of supplies, services, and public works shall be counted toward the accomplishment of the applicable SBE goal. The initial cumulative annual SBE goal for all public works, non-public works and improvements supplies and services procured by the City of Tacoma is 22 percent.

B. Revision of Annual SBE Goals. SBE utilization goals for supplies, services, and public works shall be reviewed annually to determine the total level of SBE participation reasonably attainable. If no certified SBEs are available to provide supplies, services, and/or public works, the dollar value of such supplies, services, or public works shall be exempt from the calculation of the cumulative annual goals set forth in the SBE Regulations. Proposed reduction of the cumulative annual SBE goals shall be in accordance with the SBE Regulations.

C. Application of SBE Goals to Contracts. The SBE Program Coordinator shall consult with City departments/divisions to establish the SBE goal for competitively solicited contracts of $25,000 and above, in accordance with this chapter and the SBE Regulations. No SBE goal will be established if no certified SBEs are available to provide supplies, services and/or public works.

D. Waivers. City departments/divisions or the SBE Program Coordinator may request to waive one or more of the requirements of this chapter as they apply to a particular contract or contracts. Waivers may be granted in any one or more of the following circumstances:

1. Emergency: The supplies, services and/or public works must be provided with such immediacy that neither the City nor the contractor can comply with the requirements herein. Such emergency and waiver must be documented by the department/division awarding the contract.

2. Not Practicable: Compliance with the requirements of this chapter would impose an unwarranted economic burden or risk to the City after consideration of existing budgetary approvals.

3. Sole source: The supplies, services, and/or public works are available from only one source, and subcontracting possibilities do not reasonably exist as determined by the finance purchasing manager.

4. Government purchasing. The City is a party to or included in a federal, state or inter-local government purchasing agreement as approved by the finance purchasing manager.

5. Lack of SBEs: An insufficient number of qualified SBE contractors exist to create SBE utilization opportunities.

6. Best interests of the City: Waiver of SBE goals is in the best interests of the City due to unforeseen circumstances, provided that said circumstances are set forth in writing by the requestor.

E. Review of Waivers. A waiver determination by the finance purchasing manager may be reviewed by the Board of Contracts and Awards (C&A Board). The C&A Board may also review a request to reduce or waive the SBE utilization goals based on Not Practicable or Best Interests of the City circumstances. The C&A Board shall determine whether compliance with such goals would impose unwarranted economic burden on, or risk to, the City of Tacoma as compared with the degree to which the purposes and policies of this chapter would be furthered by requiring compliance. If the determination of the C&A Board does not resolve the matter, a final determination shall be made by the City Council or Public Utility Board, as the case may be.

(Ord. 28141 Ex. A; passed Mar. 26, 2013: Ord. 27867 Ex. A; passed Dec. 15, 2009)

1.07.070 Evaluation of submittals.

A. All submittals for a supplies, services, or public works and improvements contract valued at $25,000 or more shall be evaluated for attainment of the SBE goal established for that contract in accordance with this chapter and the SBE Regulations.

B. The determination of SBE usage and the calculation of SBE goal attainment per this section shall include the following considerations:

1. General. The dollar value of the contract awarded by the City to a SBE in the procurement of supplies, services, or public works shall be counted toward achievement of the SBE goal.

2. Supplies. A public works and improvements contractor may receive credit toward attainment of the SBE goal for expenditures for supplies obtained from a SBE; provided such SBE assumes the actual and contractual responsibility for delivering the supplies with its resources. The contractor may also receive credit toward attainment of the SBE goal for the amount of the commission paid to a SBE resulting from a supplies contract with the City; provided the SBE performs a commercially useful function in the process.

3. Services and Public Works subcontracts. Any bid by a certified SBE or a bidder that utilizes a certified SBE shall receive credit toward SBE goal attainment based on the percentage of SBE usage demonstrated in the bid. A contractor that utilizes a SBE-certified subcontractor to provide services or public works shall receive a credit toward the contractor's attainment of the SBE goal based on the value of the subcontract with that SBE.

4. Brokers, Fronts, or Similar Pass-Through Arrangements. SBEs acting as brokers, fronts, or similar pass-through arrangements (as such terms are defined in the SBE Regulations) shall not count toward SBE goal attainment unless the activity reflects normal industry practices and the broker performs a commercially useful function.

C. Evaluation of competitively solicited submittals for public works and improvements and for services when a SBE utilization goal has been established for the contract to be awarded shall be as follows:

1. When contract award is based on price. The lowest priced bid submitted by a responsive and responsible bidder will be reviewed to determine if it meets the SBE goal. Such low bid shall be determined to meet the SBE goal if the bidder is a certified SBE.

a. If the low bidder meets the SBE goal, the bid shall be presumed the lowest and best responsible bid for contract award.

b. If the lowest priced bid does not meet the SBE goal, but the bid of any other responsive and responsible bidder does, and such other bid(s) is or are priced within five percent of the lowest bid, then the following formula shall be applied to each such other bid:

$$\text{(Base Bid)} \left[\frac{\text{SBE Usage Percentages}}{\text{SBE Goal Percentages}} \text{ X (.05 X Low Base Bid)} \right] = \text{Evaluated Bid}$$

c. The lowest evaluated bid after applying said evaluation formula shall be presumed the lowest and best responsible bid for contract award.

d. In no event shall a bidder's evaluated bid price be adjusted more than 5 percent from its base bid price for purposes of contract award.

2. When contract award is based on qualifications or other performance criteria in addition to price. Solicitations shall utilize a scoring system that promotes participation by certified SBEs. Submittals by respondents determined to be qualified may be further evaluated based on price using the formula applicable to price based contract awards above. The SBE Regulations may establish further requirements and procedures for final selection and contract award, including:

a. Evaluation of solicitations for Architectural and Engineering (A&E) services;

b. Evaluation and selection of submittals in response to requests for proposals; and

c. Selection of contractors from pre-qualified roster(s).

D. Evaluation of competitively solicited submittals for supplies when no SBE utilization goal has been established for the contract to be awarded shall encourage SBE participation as follows:

1. A submittal from a responsive certified SBE that is priced within five percent of the otherwise lowest responsive bid shall be recommended for award. Otherwise, the lowest responsive bidder shall be recommended for contract award.

E. The SBE Regulations may establish further SBE goal evaluation requirements and procedures for award of contracts between $5,000 and $25,000.00 and for non-competitively solicited contracts. City departments/divisions shall use due diligence to encourage and obtain SBE participation for supplies, services, and public works contracts under $5,000.

(Ord. 28141 Ex. A; passed Mar. 26, 2013: Ord. 27867 Ex. A; passed Dec. 15, 2009)

1.07.080 Contract compliance.

A. The contractor awarded a contract based on SBE participation shall, during the term of the contract, comply with the SBE goal established in said contract. To ensure compliance with this requirement following contract award, the following provisions apply:

1. Any substitutions for or failure to utilize SBEs projected to be used must be approved in advance by the SBE Program Coordinator. Substitution of one SBE with another shall be allowed where there has been a refusal to execute necessary agreements by the original SBE, a default on agreements previously made or other reasonable excuse; provided that the substitution does not increase the dollar amount of the bid.

2. Where it is shown that no other SBE is available as a substitute and that failure to secure participation by the SBE identified in the solicitation is not the fault of the respondent, substitution with a non-SBE shall be allowed; provided, that, the substitution does not increase the dollar amount of the bid.

3. If the SBE Program Coordinator determines that the contractor has not reasonably and actively pursued the use of replacement SBE(s), such contractor shall be deemed to be in non-compliance.

B. Record Keeping. All contracts shall require contractors to maintain relevant records and information necessary to document compliance with this chapter and the contractor's utilization of SBEs, and shall include the right of the City to inspect such records.

(Ord. 28141 Ex. A; passed Mar. 26, 2013: Ord. 27867 Ex. A; passed Dec. 15, 2009)

1.07.090 Program monitoring.

A. The SBE Program Coordinator shall monitor compliance with all provisions of this chapter and the SBE Regulations. The SBE Program Coordinator shall establish procedures to collect data and monitor the effect of the provisions of this chapter to assure, insofar as is practical, that the remedies set forth herein do not disproportionately favor one or more racial, gender, ethnic, or other protected groups, and that the remedies do not remain in effect beyond the point that they are required to

eliminate the effects of under utilization in City contracting. The SBE Program Coordinator shall have the authority to obtain from City departments/divisions, respondents, and contractors such relevant records, documents, and other information as is reasonably necessary to determine compliance.

B. The SBE Program Coordinator shall submit an annual report to the Community and Economic Development Director, Director of Utilities, and the City Manager detailing performance of the program. The report shall document SBE utilization levels, waivers, proposed modifications to the program, and such other matters as may be specified in the SBE Regulations.

(Ord. 28141 Ex. A; passed Mar. 26, 2013: Ord. 28110 Ex. B; passed Dec. 4, 2012: Ord. 27867 Ex. A; passed Dec. 15, 2009)

1.07.100 Enforcement.

The Director, or his or her designee, may investigate the employment practices of contractors to determine whether or not the requirements of this chapter have been violated. Such investigation shall be conducted in accordance with the procedures established in the SBE Regulations.

(Ord. 28141 Ex. A; passed Mar. 26, 2013: Ord. 28110 Ex. B; passed Dec. 4, 2012: Ord. 27867 Ex. A; passed Dec. 15, 2009)

1.07.110 Remedies.

A. Upon receipt of a determination of contractor violation by the SBE Program Coordinator, the City Manager or Director of Utilities, as appropriate, may take the following actions, singly or together, as appropriate:

1. Forfeit the contractor's bid bond and/or performance bond;

2. Publish notice of the contractor's noncompliance;

3. Cancel, terminate, or suspend the contractor's contract, or portion thereof;

4. Withhold funds due contractor until compliance is achieved; and/or

5. Recommend appropriate action including, but not limited to, disqualification of eligibility for future contract awards by the City (debarment) per Section 1.06.279 TMC;

B. Prior to exercise of any of the foregoing remedies, the City shall provide written notice to the contractor specifying the violation and the City's intent to exercise such remedy or remedies. The notice shall provide that each specified remedy becomes effective within ten business days of receipt unless the contractor appeals said action to the Hearing Examiner pursuant to Chapter 1.23 TMC.

C. When non-compliance with this chapter or the SBE Regulations has occurred, the SBE Program Coordinator and the department/division responsible for enforcement of the contract may allow continuation of the contract upon the contractor's development of a plan for compliance acceptable to the Director.

(Ord. 28141 Ex. A; passed Mar. 26, 2013: Ord. 28110 Ex. B; passed Dec. 4, 2012: Ord. 27867 Ex. A; passed Dec. 15, 2009)

1.07.120 Unlawful acts.

It shall be unlawful for any Person to willfully prevent or attempt to prevent, by intimidation, threats, coercion, or otherwise, any Person from complying with the provisions of this chapter.

(Ord. 27867 Ex. A; passed Dec. 15, 2009)

1.07.130 Severability.

If any section of this chapter or its application to any Person or circumstance is held invalid by a court of competent jurisdiction, then the remaining sections of this chapter, or the application of the provisions to other Persons or circumstances, shall not be affected.

(Ord. 27867 Ex. A; passed Dec. 15, 2009)

1.07.140 Sunset and review of program.

This chapter shall be in effect through and until December 31, 2014, unless the City Council shall determine at an earlier date that the requirements of this chapter are no longer necessary. If this chapter has not been repealed by July 1, 2014, the City Council shall determine by the end of that year whether substantial effects or lack of opportunity of SBEs remain true in the relevant market and whether, and for how long, some or all of the requirements of this chapter should remain in effect.

(Ord. 28141 Ex. A; passed Mar. 26, 2013: Ord. 27867 Ex. A; passed Dec. 15, 2009)

PART V

STATE PREVAILING WAGE RATES

****

Overtime Codes

Overtime calculations are based on the hourly rate actually paid to the worker. On public works projects, the hourly rate must be not less than the prevailing rate of wage minus the hourly rate of the cost of fringe benefits actually provided for the worker.

1. ALL HOURS WORKED IN EXCESS OF EIGHT (8) HOURS PER DAY OR FORTY (40) HOURS PER WEEK SHALL BE PAID AT ONE AND ONE-HALF TIMES THE HOURLY RATE OF WAGE.

B. All hours worked on Saturdays shall be paid at one and one-half times the hourly rate of wage. All hours worked on Sundays and holidays shall be paid at double the hourly rate of wage.

C. The first two (2) hours after eight (8) regular hours Monday through Friday and the first ten (10) hours on Saturday shall be paid at one and one-half times the hourly rate of wage. All other overtime hours and all hours worked on Sundays and holidays shall be paid at double the hourly rate of wage.

D. The first two (2) hours before or after a five-eight (8) hour workweek day or a four-ten (10) hour workweek day and the first eight (8) hours worked the next day after either workweek shall be paid at one and one-half times the hourly rate of wage. All additional hours worked and all worked on Sundays and holidays shall be paid at double the hourly rate of wage.

E. The first two (2) hours after eight (8) regular hours Monday through Friday and the first eight (8) hours on Saturday shall be paid at one and one-half times the hourly rate of wage. All other hours worked Monday through Saturday, and all hours worked on Sundays and holidays shall be paid at double the hourly rate of wage.

F. The first two (2) hours after eight (8) regular hours Monday through Friday and the first ten (10) hours on Saturday shall be paid at one and one-half times the hourly rate of wage. All other overtime hours worked, except Labor Day, shall be paid at double the hourly rate of wage. All hours worked on Labor Day shall be paid at three times the hourly rate of wage.

G. The first ten (10) hours worked on Saturdays and the first ten (10) hours worked on a fifth calendar weekday in a four-ten hour schedule, shall be paid at one and one-half times the hourly rate of wage. All hours worked in excess of ten (10) hours per day Monday through Saturday and all hours worked on Sundays and holidays shall be paid at double the hourly rate of wage.

H. All hours worked on Saturdays (except makeup days if work is lost due to inclement weather conditions or equipment breakdown) shall be paid at one and one-half times the hourly rate of wage. All hours worked Monday through Saturday over twelve (12) hours and all hours worked on Sundays and holidays shall be paid at double the hourly rate of wage.

I. All hours worked on Sundays and holidays shall also be paid at double the hourly rate of wage.

J. The first two (2) hours after eight (8) regular hours Monday through Friday and the first ten (10) hours on Saturday shall be paid at one and one-half times the hourly rate of wage. All hours worked over ten (10) hours Monday through Saturday, Sundays and holidays shall be paid at double the hourly rate of wage.

K. All hours worked on Saturdays and Sundays shall be paid at one and one-half times the hourly rate of wage. All hours worked on holidays shall be paid at double the hourly rate of wage.

M. All hours worked on Saturdays (except makeup days if work is lost due to inclement weather conditions) shall be paid at one and one-half times the hourly rate of wage. All hours worked on Sundays and holidays shall be paid at double the hourly rate of wage.

1. N. All hours worked on Saturdays (except makeup days) shall be paid at one and one-half times the hourly rate of wage. All hours worked on Sundays and holidays shall be paid at double the hourly rate of wage.

O. The first ten (10) hours worked on Saturday shall be paid at one and one-half times the hourly rate of wage. All hours worked on Sundays, holidays and after twelve (12) hours, Monday through Friday and after ten (10) hours on Saturday shall be paid at double the hourly rate of wage.

P. All hours worked on Saturdays (except makeup days if circumstances warrant) and Sundays shall be paid at one and one-half times the hourly rate of wage. All hours worked on holidays shall be paid at double the hourly rate of wage.

Q. The first two (2) hours after eight (8) regular hours Monday through Friday and up to ten (10) hours worked on Saturdays shall be paid at one and one-half times the hourly rate of wage. All hours worked in excess of ten (10) hours per day Monday through Saturday and all hours worked on Sundays and holidays (except Christmas day) shall be paid at double the hourly rate of wage. All hours worked on Christmas day shall be paid at two and one-half times the hourly rate of wage.

R. All hours worked on Sundays and holidays shall be paid at two times the hourly rate of wage.

S. The first two (2) hours after eight (8) regular hours Monday through Friday and the first eight (8) hours on Saturday shall be paid at one and one-half times the hourly rate of wage. All hours worked on holidays and all other overtime hours worked, except Labor Day, shall be paid at double the hourly rate of wage. All hours worked on Labor Day shall be paid at three times the hourly rate of wage.

U. All hours worked on Saturdays shall be paid at one and one-half times the hourly rate of wage. All hours worked on Sundays and holidays (except Labor Day) shall be paid at two times the hourly rate of wage. All hours worked on Labor Day shall be paid at three times the hourly rate of wage.

V. All hours worked on Sundays and holidays (except Thanksgiving Day and Christmas day) shall be paid at one and one-half times the hourly rate of wage. All hours worked on Thanksgiving Day and Christmas day shall be paid at double the hourly rate of wage.

W. All hours worked on Saturdays and Sundays (except make-up days due to conditions beyond the control of the employer)) shall be paid at one and one-half times the hourly rate of wage. All hours worked on holidays shall be paid at double the hourly rate of wage.

X. The first four (4) hours after eight (8) regular hours Monday through Friday and the first twelve (12) hours on Saturday shall be paid at one and one-half times the hourly rate of wage. All hours worked over twelve (12) hours Monday through Saturday, Sundays and holidays shall be paid at double the hourly rate of wage. When holiday falls on Saturday or Sunday, the day before Saturday, Friday, and the day after Sunday, Monday, shall be considered the holiday and all work performed shall be paid at double the hourly rate of wage.

Y. All hours worked outside the hours of 5:00 am and 5:00 pm (or such other hours as may be agreed upon by any employer and the employee) and all hours worked in excess of eight (8) hours per day (10 hours per day for a 4 x 10 workweek) and on Saturdays and holidays (except labor day) shall be paid at one and one-half times the hourly rate of wage. (except for employees who are absent from work without prior approval on a scheduled workday during the workweek shall be paid at the straight-time rate until they have worked 8 hours in a day (10 in a 4 x 10 workweek) or 40 hours during that workweek.) All hours worked Monday through Saturday over twelve (12) hours and all hours worked on Sundays and Labor Day shall be paid at double the hourly rate of wage.

Z. All hours worked on Saturdays and Sundays shall be paid at one and one-half times the hourly rate of wage. All hours worked on holidays shall be paid the straight time rate of pay in addition to holiday pay.

2. ALL HOURS WORKED IN EXCESS OF EIGHT (8) HOURS PER DAY OR FORTY (40) HOURS PER WEEK SHALL BE PAID AT ONE AND ONE-HALF TIMES THE HOURLY RATE OF WAGE.

   B. All hours worked on holidays shall be paid at one and one-half times the hourly rate of wage.

   C. All hours worked on Sundays shall be paid at one and one-half times the hourly rate of wage. All hours worked on holidays shall be paid at two times the hourly rate of wage.

   F. The first eight (8) hours worked on holidays shall be paid at the straight hourly rate of wage in addition to the holiday pay. All hours worked in excess of eight (8) hours on holidays shall be paid at double the hourly rate of wage.

   G. All hours worked on Sunday shall be paid at two times the hourly rate of wage. All hours worked on paid holidays shall be paid at two and one-half times the hourly rate of wage including holiday pay.

   H. All hours worked on Sunday shall be paid at two times the hourly rate of wage. All hours worked on holidays shall be paid at one and one-half times the hourly rate of wage.

   O. All hours worked on Sundays and holidays shall be paid at one and one-half times the hourly rate of wage.

   R. All hours worked on Sundays and holidays and all hours worked over sixty (60) in one week shall be paid at double the hourly rate of wage.

   U. All hours worked on Saturdays shall be paid at one and one-half times the hourly rate of wage. All hours worked over 12 hours in a day or on Sundays and holidays shall be paid at double the hourly rate of wage.

   W. The first two (2) hours after eight (8) regular hours Monday through Friday and the first eight (8) hours on Saturday shall be paid at one and one-half times the hourly rate of wage. All other hours worked Monday through Saturday, and all hours worked on Sundays and holidays shall be paid at double the hourly rate of wage. On a four-day, ten-hour weekly schedule, either Monday thru Thursday or Tuesday thru Friday schedule, all hours worked after ten shall be paid at double the hourly rate of wage. The first eight (8) hours worked on the fifth day shall be paid at one and one-half times the hourly rate of wage. All other hours worked on the fifth, sixth, and seventh days and on holidays shall be paid at double the hourly rate of wage.

3. ALL HOURS WORKED IN EXCESS OF EIGHT (8) HOURS PER DAY OR FORTY (40) HOURS PER WEEK SHALL BE PAID AT ONE AND ONE-HALF TIMES THE HOURLY RATE OF WAGE.

   A. Work performed in excess of eight (8) hours of straight time per day, or ten (10) hours of straight time per day when four ten (10) hour shifts are established, or forty (40) hours of straight time per week, Monday through Friday, or outside the normal shift, and all work on Saturdays shall be paid at time and one-half the straight time rate. Hours worked over twelve hours (12) in a single shift and all work performed after 6:00 pm Saturday to 6:00 am Monday and holidays shall be paid at double the straight time rate of pay. Any shift starting between the hours of 6:00 pm and midnight shall receive an additional one dollar ($1.00) per hour for all hours worked that shift. The employer shall have the sole discretion to assign overtime work to employees. Primary consideration for overtime work shall be given to employees regularly assigned to the work to be performed on overtime situations. After an employee has worked eight (8) hours at an applicable overtime rate, all additional hours shall be at the applicable overtime rate until such time as the employee has had a break of eight (8) hours or more.

3. C. Work performed in excess of eight (8) hours of straight time per day, or ten (10) hours of straight time per day when four ten (10) hour shifts are established, or forty (40) hours of straight time per week, Monday through Friday, or outside the normal shift, and all work on Saturdays shall be paid at one and one-half times the hourly rate of wage. All work performed after 6:00 pm Saturday to 5:00 am Monday and Holidays shall be paid at double the hourly rate of wage. After an employee has worked eight (8) hours at an applicable overtime rate, all additional hours shall be at the applicable overtime rate until such time as the employee has had a break of eight (8) hours or more.

D. All hours worked between the hours of 6:00 pm and 6:00 am, Monday through Saturday, shall be paid at a premium rate of 15% over the hourly rate of wage. All other hours worked after 6:00 am on Saturdays, shall be paid at one and one-half times the hourly rate of wage. All hours worked on Sundays and holidays shall be paid at double the hourly rate of wage.

E. All hours worked Sundays and holidays shall be paid at double the hourly rate of wage. Each week, once 40 hours of straight time work is achieved, then any hours worked over 10 hours per day Monday through Saturday shall be paid at double the hourly wage rate.

F. All hours worked on Saturday shall be paid at one and one-half times the hourly rate of wage. All hours worked on Sunday shall be paid at two times the hourly rate of wage. All hours worked on paid holidays shall be paid at two and one-half times the hourly rate of wage including holiday pay.

H. All work performed on Sundays between March 16th and October 14th and all Holidays shall be compensated for at two (2) times the regular rate of pay. Work performed on Sundays between October 15th and March 15th shall be compensated at one and one half (1-1/2) times the regular rate of pay.

I. All hours worked on Saturdays shall be paid at one and one-half times the hourly rate of wage. In the event the job is down due to weather conditions during a five day work week (Monday through Friday,) or a four day-ten hour work week (Tuesday through Friday,) then Saturday may be worked as a voluntary make-up day at the straight time rate. However, Saturday shall not be utilized as a make-up day when a holiday falls on Friday. All hours worked Monday through Saturday over twelve (12) hours and all hours worked on Sundays and holidays shall be paid at double the hourly rate of wage.

4. ALL HOURS WORKED IN EXCESS OF EIGHT (8) HOURS PER DAY OR FORTY (40) HOURS PER WEEK SHALL BE PAID AT ONE AND ONE-HALF TIMES THE HOURLY RATE OF WAGE.

A. All hours worked in excess of eight (8) hours per day or forty (40) hours per week shall be paid at double the hourly rate of wage. All hours worked on Saturdays, Sundays and holidays shall be paid at double the hourly rate of wage.

B. All hours worked over twelve (12) hours per day and all hours worked on holidays shall be paid at double the hourly rate of wage.

C. On Monday through Friday, the first four (4) hours of overtime after eight (8) hours of straight time work shall be paid at one and one half (1-1/2) times the straight time rate of pay, unless a four (4) day ten (10) hour workweek has been established. On a four (4) day ten (10) hour workweek scheduled Monday through Thursday, or Tuesday through Friday, the first two (2) hours of overtime after ten (10) hours of straight time work shall be paid at one and one half (1-1/2) times the straight time rate of pay. On Saturday, the first twelve (12) hours of work shall be paid at one and one half (1-1/2) times the straight time rate of pay, except that if the job is down on Monday through Friday due to weather conditions or other conditions outside the control of the employer, the first ten (10) hours on Saturday may be worked at the straight time rate of pay. All hours worked over twelve (12) hours in a day and all hours worked on Sunday and Holidays shall be paid at two (2) times the straight time rate of pay.

Holiday Codes

5. A. Holidays: New Year's Day, Memorial Day, Independence Day, Labor Day, Thanksgiving Day, Friday after Thanksgiving Day, and Christmas Day (7).

B. Holidays: New Year's Day, Memorial Day, Independence Day, Labor Day, Thanksgiving Day, Friday after Thanksgiving Day, the day before Christmas, and Christmas Day (8).

C. Holidays: New Year's Day, Presidents' Day, Memorial Day, Independence Day, Labor Day, Thanksgiving Day, the Friday after Thanksgiving Day, And Christmas Day (8).

D. Holidays: New Year's Day, Memorial Day, Independence Day, Labor Day, Thanksgiving Day, the Friday and Saturday after Thanksgiving Day, And Christmas Day (8).

H. Holidays: New Year's Day, Memorial Day, Independence Day, Thanksgiving Day, the Day after Thanksgiving Day, And Christmas (6).

I. Holidays: New Year's Day, Memorial Day, Independence Day, Labor Day, Thanksgiving Day, and Christmas Day (6).

J. Holidays: New Year's Day, Memorial Day, Independence Day, Thanksgiving Day, Friday after Thanksgiving Day, Christmas Eve Day, And Christmas Day (7).

K. Holidays: New Year's Day, Presidents' Day, Memorial Day, Independence Day, Labor Day, Thanksgiving Day, Friday After Thanksgiving Day, The Day Before Christmas, And Christmas Day (9).

L. Holidays: New Year's Day, Martin Luther King Jr. Day, Memorial Day, Independence Day, Labor Day, Thanksgiving Day, Friday After Thanksgiving Day, And Christmas Day (8).

N. Holidays: New Year's Day, Presidents' Day, Memorial Day, Independence Day, Labor Day, Veterans' Day, Thanksgiving Day, The Friday After Thanksgiving Day, And Christmas Day (9).

P. Holidays: New Year's Day, Memorial Day, Independence Day, Labor Day, Thanksgiving Day, Friday And Saturday After Thanksgiving Day, The Day Before Christmas, And Christmas Day (9). If A Holiday Falls On Sunday, The Following Monday Shall Be Considered As A Holiday.

Q. Paid Holidays: New Year's Day, Memorial Day, Independence Day, Labor Day, Thanksgiving Day, and Christmas Day (6).

R. Paid Holidays: New Year's Day, Memorial Day, Independence Day, Labor Day, Thanksgiving Day, Day After Thanksgiving Day, One-Half Day Before Christmas Day, And Christmas Day. (7 1/2).

S. Paid Holidays: New Year's Day, Presidents' Day, Memorial Day, Independence Day, Labor Day, Thanksgiving Day, And Christmas Day (7).

T. Paid Holidays: New Year's Day, Washington's Birthday, Memorial Day, Independence Day, Labor Day, Thanksgiving Day, The Friday After Thanksgiving Day, Christmas Day, And The Day Before Or After Christmas (9).

Z. Holidays: New Year's Day, Memorial Day, Independence Day, Labor Day, Veterans Day, Thanksgiving Day, the Friday after Thanksgiving Day, And Christmas Day (8).

Holiday Codes Continued

6. A. Paid Holidays: New Year's Day, Presidents' Day, Memorial Day, Independence Day, Labor Day, Thanksgiving Day, The Friday After Thanksgiving Day, And Christmas Day (8).

E. Paid Holidays: New Year's Day, Day Before Or After New Year's Day, Presidents Day, Memorial Day, Independence Day, Labor Day, Thanksgiving Day, Day After Thanksgiving Day, Christmas Day, And A Half-Day On Christmas Eve Day. (9 1/2).

G. Paid Holidays: New Year's Day, Martin Luther King Jr. Day, Presidents' Day, Memorial Day, Independence Day, Labor Day, Veterans' Day, Thanksgiving Day, The Friday After Thanksgiving Day, Christmas Day, And Christmas Eve Day (11).

H. Paid Holidays: New Year's Day, New Year's Eve Day, Memorial Day, Independence Day, Labor Day, Thanksgiving Day, Friday After Thanksgiving Day, Christmas Day, The Day After Christmas, And A Floating Holiday (10).

I. Paid Holidays: New Year's Day, Memorial Day, Independence Day, Labor Day, Thanksgiving Day, Friday After Thanksgiving Day, And Christmas Day (7).

T. Paid Holidays: New Year's Day, Presidents' Day, Memorial Day, Independence Day, Labor Day, Thanksgiving Day, The Friday After Thanksgiving Day, The Last Working Day Before Christmas Day, And Christmas Day (9).

Z. Holidays: New Year's Day, Memorial Day, Independence Day, Labor Day, Thanksgiving Day, Friday after Thanksgiving Day, And Christmas Day (7). If a holiday falls on Saturday, the preceding Friday shall be considered as the holiday. If a holiday falls on Sunday, the following Monday shall be considered as the holiday.

Holiday Codes Continued

7. A. Holidays: New Year's Day, Memorial Day, Independence Day, Labor Day, Thanksgiving Day, The Friday And Saturday After Thanksgiving Day, And Christmas Day (8). Any Holiday Which Falls On A Sunday Shall Be Observed As A Holiday On The Following Monday. If any of the listed holidays falls on a Saturday, the preceding Friday shall be a regular work day.

B. Holidays: New Year's Day, Memorial Day, Independence Day, Labor Day, Thanksgiving Day, the Friday and Saturday after Thanksgiving Day, And Christmas Day (8). Any holiday which falls on a Sunday shall be observed as a holiday on the following Monday. Any holiday which falls on a Saturday shall be observed as a holiday on the preceding Friday.

C. Holidays: New Year's Day, Martin Luther King Jr. Day, Memorial Day, Independence Day, Labor Day, Thanksgiving Day, The Friday After Thanksgiving Day, And Christmas Day (8). Any holiday which falls on a Sunday shall be observed as a holiday on the following Monday. Any holiday which falls on a Saturday shall be observed as a holiday on the preceding Friday.

D. Paid Holidays: New Year's Day, Memorial Day, Independence Day, Labor Day, Veteran's Day, Thanksgiving Day, the Friday after Thanksgiving Day, And Christmas Day (8). Unpaid Holidays: President's Day. Any paid holiday which falls on a Sunday shall be observed as a holiday on the following Monday. Any paid holiday which falls on a Saturday shall be observed as a holiday on the preceding Friday.

E. Holidays: New Year's Day, Memorial Day, Independence Day, Labor Day, Thanksgiving Day, the Friday after Thanksgiving Day, And Christmas Day (7). Any holiday which falls on a Sunday shall be observed as a holiday on the following Monday. Any holiday which falls on a Saturday shall be observed as a holiday on the preceding Friday.

7. F. Holidays: New Year's Day, Memorial Day, Independence Day, Labor Day, Thanksgiving Day, the Friday after Thanksgiving Day, the last working day before Christmas day and Christmas day (8). Any holiday which falls on a Sunday shall be observed as a holiday on the following Monday. Any holiday which falls on a Saturday shall be observed as a holiday on the preceding Friday.

G. Holidays: New Year's Day, Memorial Day, Independence Day, Labor Day, Thanksgiving Day, and Christmas Day (6). Any holiday which falls on a Sunday shall be observed as a holiday on the following Monday.

H. Holidays: New Year's Day, Martin Luther King Jr. Day, Independence Day, Memorial Day, Labor Day, Thanksgiving Day, the Friday after Thanksgiving Day, the Last Working Day before Christmas Day and Christmas Day (9). Any holiday which falls on a Sunday shall be observed as a holiday on the following Monday. Any holiday which falls on a Saturday shall be observed as a holiday on the preceding Friday.

I. Holidays: New Year's Day, President's Day, Independence Day, Memorial Day, Labor Day, Thanksgiving Day, The Friday After Thanksgiving Day, The Day Before Christmas Day And Christmas Day (9). Any holiday which falls on a Sunday shall be observed as a holiday on the following Monday. Any holiday which falls on a Saturday shall be observed as a holiday on the preceding Friday.

J. Holidays: New Year's Day, Independence Day, Memorial Day, Labor Day, Thanksgiving Day and Christmas Day (6). Any holiday which falls on a Sunday shall be observed as a holiday on the following Monday. Any holiday which falls on a Saturday shall be observed as a holiday on the preceding Friday.

K. Holidays: New Year's Day, Memorial Day, Independence Day, Thanksgiving Day, the Friday and Saturday after Thanksgiving Day, And Christmas Day (8). Any holiday which falls on a Sunday shall be observed as a holiday on the following Monday. Any holiday which falls on a Saturday shall be observed as a holiday on the preceding Friday.

L. Holidays: New Year's Day, Memorial Day, Labor Day, Independence Day, Thanksgiving Day, the Last Work Day before Christmas Day, And Christmas Day (7). Any holiday which falls on a Sunday shall be observed as a holiday on the following Monday. Any holiday which falls on a Saturday shall be observed as a holiday on the preceding Friday.

M. Paid Holidays: New Year's Day, The Day after or before New Year's Day, President's Day, Memorial Day, Independence Day, Labor Day, Thanksgiving Day, the Friday after Thanksgiving Day, Christmas Day, And the Day after or before Christmas Day 10). Any holiday which falls on a Sunday shall be observed as a holiday on the following Monday. Any holiday which falls on a Saturday shall be observed as a holiday on the preceding Friday.

N. Holidays: New Year's Day, Memorial Day, Independence Day, Labor Day, Thanksgiving Day, the Friday after Thanksgiving Day, And Christmas Day (7). Any holiday which falls on a Sunday shall be observed as a holiday on the following Monday. When Christmas falls on a Saturday, the preceding Friday shall be observed as a holiday.

P. Holidays: New Year's Day, Memorial Day, Independence Day, Labor Day, Thanksgiving Day, Friday after Thanksgiving Day, And Christmas Day (7). Any holiday which falls on a Sunday shall be observed as a holiday on the following Monday.

Q. Holidays: New Year's Day, Memorial Day, Independence Day, Labor Day, Thanksgiving Day, the Friday after Thanksgiving Day, the Last Working Day before Christmas Day and Christmas Day (8). Any holiday which falls on a Sunday shall be observed as a holiday on the following Monday. If any of the listed holidays falls on a Saturday, the preceding Friday shall be a regular work day.

R. Paid Holidays: New Year's Day, the day after or before New Year's Day, President's Day, Memorial Day, Independence Day, Labor Day, Thanksgiving Day, the Friday after Thanksgiving Day, Christmas Day, and the day after or before Christmas Day (10). If any of the listed holidays fall on Saturday, the preceding Friday shall be observed as the holiday. If any of the listed holidays falls on a Sunday, the day observed by the Nation shall be considered a holiday and compensated accordingly.

7. S. Paid Holidays: New Year's Day, Memorial Day, Independence Day, Labor Day, Thanksgiving Day, Friday After Thanksgiving Day, Christmas Day, The Day After Christmas, And A Floating Holiday (9). If any of the listed holidays falls on a Sunday, the day observed by the Nation shall be considered a holiday and compensated accordingly.

T. Paid Holidays: New Year's Day, The Day After Or Before New Year's Day, President's Day, Memorial Day, Independence Day, Labor Day, Thanksgiving Day, The Friday After Thanksgiving Day, Christmas Day, and The Day After Or Before Christmas Day. (10). If any of the listed holidays falls on a Sunday, the day observed by the Nation shall be considered a holiday and compensated accordingly. Any holiday which falls on a Saturday shall be observed as a holiday on the preceding Friday.

Note Codes

8. A. In addition to the hourly wage and fringe benefits, the following depth premiums apply to depths of fifty feet or more:
Over 50' To 100' -$2.00 per Foot for Each Foot Over 50 Feet
Over 100' To 150' -$3.00 per Foot for Each Foot Over 100 Feet
Over 150' To 220' -$4.00 per Foot for Each Foot Over 150 Feet
Over 220' -$5.00 per Foot for Each Foot Over 220 Feet

C. In addition to the hourly wage and fringe benefits, the following depth premiums apply to depths of fifty feet or more:
Over 50' To 100' -$1.00 per Foot for Each Foot Over 50 Feet
Over 100' To 150' -$1.50 per Foot for Each Foot Over 100 Feet
Over 150' To 200' -$2.00 per Foot for Each Foot Over 150 Feet
Over 200' -Divers May Name Their Own Price

D. Workers working with supplied air on hazmat projects receive an additional $1.00 per hour.

L. Workers on hazmat projects receive additional hourly premiums as follows -Level A: $0.75, Level B: $0.50, And Level C: $0.25.

M. Workers on hazmat projects receive additional hourly premiums as follows: Levels A & B: $1.00, Levels C & D: $0.50.

N. Workers on hazmat projects receive additional hourly premiums as follows -Level A: $1.00, Level B: $0.75, Level C: $0.50, And Level D: $0.25.

P. Workers on hazmat projects receive additional hourly premiums as follows -Class A Suit: $2.00, Class B Suit: $1.50, Class C Suit: $1.00, And Class D Suit $0.50.

Q. The highest pressure registered on the gauge for an accumulated time of more than fifteen (15) minutes during the shift shall be used in determining the scale paid.

R. Effective August 31, 2012 – A Traffic Control Supervisor shall be present on the project whenever flagging or spotting or other traffic control labor is being utilized. A Traffic Control Laborer performs the setup, maintenance and removal of all temporary traffic control devices and construction signs necessary to control vehicular, bicycle, and pedestrian traffic during construction operations. Flaggers and Spotters shall be posted where shown on approved Traffic Control Plans or where directed by the Engineer. All flaggers and spotters shall possess a current flagging card issued by the State of Washington, Oregon, Montana, or Idaho. These classifications are only effective on or after August 31, 2012.

8. S. Effective August 31, 2012 – A Traffic Control Supervisor shall be present on the project whenever flagging or spotting or other traffic control labor is being utilized. Flaggers and Spotters shall be posted where shown on approved Traffic Control Plans or where directed by the Engineer. All flaggers and spotters shall possess a current flagging card issued by the State of Washington, Oregon, Montana, or Idaho. This classification is only effective on or after August 31, 2012.

T. Effective August 31, 2012 – A Traffic Control Laborer performs the setup, maintenance and removal of all temporary traffic control devices and construction signs necessary to control vehicular, bicycle, and pedestrian traffic during construction operations. Flaggers and Spotters shall be posted where shown on approved Traffic Control Plans or where directed by the Engineer. All flaggers and spotters shall possess a current flagging card issued by the State of Washington, Oregon, Montana, or Idaho. This classification is only effective on or after August 31, 2012.

State of Washington
Department of Labor & Industries

Prevailing Wage Section - Telephone 360-902-5335
PO Box 44540, Olympia, WA 98504-4540

Washington State Prevailing Wage

The PREVAILING WAGES listed here include both the hourly wage rate and the hourly rate of fringe benefits. On public works projects, worker's wage and benefit rates must add to not less than this total. A brief description of overtime calculation requirements are provided on the Benefit Code Key.

Journey Level Prevailing Wage Rates for the Effective Date: 12/23/2014

County	Trade	Job Classification	Wage	Holiday	Overtime	Note
Pierce	Asbestos Abatement Workers	Journey Level	$42.67	5D	1H	
Pierce	Boilermakers	Journey Level	$64.44	5N	1C	
Pierce	Brick Mason	Brick And Block Finisher	$44.46	5A	1M	
Pierce	Brick Mason	Journey Level	$51.32	5A	1M	
Pierce	Brick Mason	Pointer-Caulker-Cleaner	$51.32	5A	1M	
Pierce	Building Service Employees	Janitor	$9.37		1	
Pierce	Building Service Employees	Shampooer	$10.08		1	
Pierce	Building Service Employees	Waxer	$10.08		1	
Pierce	Building Service Employees	Window Cleaner	$13.22		1	
Pierce	Cabinet Makers (In Shop)	Journey Level	$28.36		1	
Pierce	Carpenters	Acoustical Worker	$52.32	5D	4C	
Pierce	Carpenters	Bridge, Dock And Wharf Carpenters	$52.32	5D	4C	
Pierce	Carpenters	Carpenter	$52.32	5D	4C	
Pierce	Carpenters	Carpenters on Stationary Tools	$52.45	5D	4C	
Pierce	Carpenters	Creosoted Material	$52.42	5D	4C	
Pierce	Carpenters	Floor Finisher	$52.32	5D	4C	
Pierce	Carpenters	Floor Layer	$52.32	5D	4C	
Pierce	Carpenters	Scaffold Erector	$52.32	5D	4C	
Pierce	Cement Masons	Journey Level	$52.38	7A	1M	
Pierce	Divers & Tenders	Diver	$105.37	5D	4C	8A
Pierce	Divers & Tenders	Diver On Standby	$59.50	5D	4C	
Pierce	Divers & Tenders	Diver Tender	$54.82	5D	4C	
Pierce	Divers & Tenders	Surface Rcv & Rov Operator	$54.82	5D	4C	
Pierce	Divers & Tenders	Surface Rcv & Rov Operator Tender	$51.07	5A	4C	
Pierce	Dredge Workers	Assistant Engineer	$53.00	5D	3F	
Pierce	Dredge Workers	Assistant Mate (Deckhand)	$52.58	5D	3F	

Pierce	Dredge Workers	Boatmen	$52.30	5D	3F	
Pierce	Dredge Workers	Engineer Welder	$54.04	5D	3F	
Pierce	Dredge Workers	Leverman, Hydraulic	$55.17	5D	3F	
Pierce	Dredge Workers	Mates	$52.30	5D	3F	
Pierce	Dredge Workers	Oiler	$52.58	5D	3F	
Pierce	Drywall Applicator	Journey Level	$52.32	5D	1H	
Pierce	Drywall Tapers	Journey Level	$52.37	5P	1E	
Pierce	Electrical Fixture Maintenance Workers	Journey Level	$17.76		1	
Pierce	Electricians - Inside	Cable Splicer	$61.96	5C	1G	
Pierce	Electricians - Inside	Journey Level	$58.35	5C	1G	
Pierce	Electricians - Inside	Lead Covered Cable Splicer	$65.56	5C	1G	
Pierce	Electricians - Inside	Welder	$61.96	5C	1G	
Pierce	Electricians - Motor Shop	Craftsman	$15.37		1	
Pierce	Electricians - Motor Shop	Journey Level	$14.69		1	
Pierce	Electricians - Powerline Construction	Cable Splicer	$68.33	5A	4A	
Pierce	Electricians - Powerline Construction	Certified Line Welder	$62.50	5A	4A	
Pierce	Electricians - Powerline Construction	Groundperson	$42.56	5A	4A	
Pierce	Electricians - Powerline Construction	Heavy Line Equipment Operator	$62.50	5A	4A	
Pierce	Electricians - Powerline Construction	Journey Level Lineperson	$62.50	5A	4A	
Pierce	Electricians - Powerline Construction	Line Equipment Operator	$52.47	5A	4A	
Pierce	Electricians - Powerline Construction	Pole Sprayer	$62.50	5A	4A	
Pierce	Electricians - Powerline Construction	Powderperson	$46.55	5A	4A	
Pierce	Electronic Technicians	Journey Level	$32.39		1	
Pierce	Elevator Constructors	Mechanic	$80.14	7D	4A	
Pierce	Elevator Constructors	Mechanic In Charge	$86.77	7D	4A	
Pierce	Fabricated Precast Concrete Products	Journey Level - In-Factory Work Only	$9.32		1	
Pierce	Fence Erectors	Fence Erector	$22.56		1	
Pierce	Flaggers	Journey Level	$36.17	7A	3I	
Pierce	Glaziers	Journey Level	$54.91	7L	1Y	
Pierce	Heat & Frost Insulators And Asbestos Workers	Journeyman	$60.93	5J	1S	
Pierce	Heating Equipment Mechanics	Journey Level	$70.37	7F	1E	
Pierce	Hod Carriers & Mason Tenders	Journey Level	$44.00	7A	3I	
Pierce	Industrial Power Vacuum Cleaner	Journey Level	$9.32		1	
Pierce	Inland Boatmen	Boat Operator	$54.57	5B	1K	
Pierce	Inland Boatmen	Cook	$50.95	5B	1K	

Pierce	Inland Boatmen	Deckhand	$51.19	5B	1K	
Pierce	Inland Boatmen	Deckhand Engineer	$52.18	5B	1K	
Pierce	Inland Boatmen	Launch Operator	$53.40	5B	1K	
Pierce	Inland Boatmen	Mate	$53.40	5B	1K	
Pierce	Inspection/Cleaning/Sealing Of Sewer & Water Systems By Remote Control	Cleaner Operator, Foamer Operator	$9.73		1	
Pierce	Inspection/Cleaning/Sealing Of Sewer & Water Systems By Remote Control	Grout Truck Operator	$11.48		1	
Pierce	Inspection/Cleaning/Sealing Of Sewer & Water Systems By Remote Control	Head Operator	$12.78		1	
Pierce	Inspection/Cleaning/Sealing Of Sewer & Water Systems By Remote Control	Technician	$9.32		1	
Pierce	Inspection/Cleaning/Sealing Of Sewer & Water Systems By Remote Control	Tv Truck Operator	$10.53		1	
Pierce	Insulation Applicators	Journey Level	$52.32	5D	4C	
Pierce	Ironworkers	Journeyman	$61.62	7N	1O	
Pierce	Laborers	Air, Gas Or Electric Vibrating Screed	$42.67	7A	3I	
Pierce	Laborers	Airtrac Drill Operator	$44.00	7A	3I	
Pierce	Laborers	Ballast Regular Machine	$42.67	7A	3I	
Pierce	Laborers	Batch Weighman	$36.17	7A	3I	
Pierce	Laborers	Brick Pavers	$42.67	7A	3I	
Pierce	Laborers	Brush Cutter	$42.67	7A	3I	
Pierce	Laborers	Brush Hog Feeder	$42.67	7A	3I	
Pierce	Laborers	Burner	$42.67	7A	3I	
Pierce	Laborers	Caisson Worker	$44.00	7A	3I	
Pierce	Laborers	Carpenter Tender	$42.67	7A	3I	
Pierce	Laborers	Caulker	$42.67	7A	3I	
Pierce	Laborers	Cement Dumper-paving	$43.46	7A	3I	
Pierce	Laborers	Cement Finisher Tender	$42.67	7A	3I	
Pierce	Laborers	Change House Or Dry Shack	$42.67	7A	3I	
Pierce	Laborers	Chipping Gun (under 30 Lbs.)	$42.67	7A	3I	
Pierce	Laborers	Chipping Gun(30 Lbs. And Over)	$43.46	7A	3I	
Pierce	Laborers	Choker Setter	$42.67	7A	3I	
Pierce	Laborers	Chuck Tender	$42.67	7A	3I	
Pierce	Laborers	Clary Power Spreader	$43.46	7A	3I	
Pierce	Laborers	Clean-up Laborer	$42.67	7A	3I	
Pierce	Laborers	Concrete Dumper/chute Operator	$43.46	7A	3I	
Pierce	Laborers	Concrete Form Stripper	$42.67	7A	3I	
Pierce	Laborers	Concrete Placement Crew	$43.46	7A	3I	

Pierce	Laborers	Concrete Saw Operator/core Driller	$43.46	7A	3I	
Pierce	Laborers	Crusher Feeder	$36.17	7A	3I	
Pierce	Laborers	Curing Laborer	$42.67	7A	3I	
Pierce	Laborers	Demolition: Wrecking & Moving (incl. Charred Material)	$42.67	7A	3I	
Pierce	Laborers	Ditch Digger	$42.67	7A	3I	
Pierce	Laborers	Diver	$44.00	7A	3I	
Pierce	Laborers	Drill Operator (hydraulic,diamond)	$43.46	7A	3I	
Pierce	Laborers	Dry Stack Walls	$42.67	7A	3I	
Pierce	Laborers	Dump Person	$42.67	7A	3I	
Pierce	Laborers	Epoxy Technician	$42.67	7A	3I	
Pierce	Laborers	Erosion Control Worker	$42.67	7A	3I	
Pierce	Laborers	Faller & Bucker Chain Saw	$43.46	7A	3I	
Pierce	Laborers	Fine Graders	$42.67	7A	3I	
Pierce	Laborers	Firewatch	$36.17	7A	3I	
Pierce	Laborers	Form Setter	$42.67	7A	3I	
Pierce	Laborers	Gabian Basket Builders	$42.67	7A	3I	
Pierce	Laborers	General Laborer	$42.67	7A	3I	
Pierce	Laborers	Grade Checker & Transit Person	$44.00	7A	3I	
Pierce	Laborers	Grinders	$42.67	7A	3I	
Pierce	Laborers	Grout Machine Tender	$42.67	7A	3I	
Pierce	Laborers	Groutmen (pressure)including Post Tension Beams	$43.46	7A	3I	
Pierce	Laborers	Guardrail Erector	$42.67	7A	3I	
Pierce	Laborers	Hazardous Waste Worker (level A)	$44.00	7A	3I	
Pierce	Laborers	Hazardous Waste Worker (level B)	$43.46	7A	3I	
Pierce	Laborers	Hazardous Waste Worker (level C)	$42.67	7A	3I	
Pierce	Laborers	High Scaler	$44.00	7A	3I	
Pierce	Laborers	Jackhammer	$43.46	7A	3I	
Pierce	Laborers	Laserbeam Operator	$43.46	7A	3I	
Pierce	Laborers	Maintenance Person	$42.67	7A	3I	
Pierce	Laborers	Manhole Builder-mudman	$43.46	7A	3I	
Pierce	Laborers	Material Yard Person	$42.67	7A	3I	
Pierce	Laborers	Motorman-dinky Locomotive	$43.46	7A	3I	
Pierce	Laborers	Nozzleman (concrete Pump, Green Cutter When Using Combination Of High Pressure Air & Water On Concrete & Rock, Sandblast, Gunite, Shotcrete, Water Bla	$43.46	7A	3I	
Pierce	Laborers	Pavement Breaker	$43.46	7A	3I	

Pierce	Laborers	Pilot Car	$36.17	7A	3I	
Pierce	Laborers	Pipe Layer Lead	$44.00	7A	3I	
Pierce	Laborers	Pipe Layer/tailor	$43.46	7A	3I	
Pierce	Laborers	Pipe Pot Tender	$43.46	7A	3I	
Pierce	Laborers	Pipe Reliner	$43.46	7A	3I	
Pierce	Laborers	Pipe Wrapper	$43.46	7A	3I	
Pierce	Laborers	Pot Tender	$42.67	7A	3I	
Pierce	Laborers	Powderman	$44.00	7A	3I	
Pierce	Laborers	Powderman's Helper	$42.67	7A	3I	
Pierce	Laborers	Power Jacks	$43.46	7A	3I	
Pierce	Laborers	Railroad Spike Puller - Power	$43.46	7A	3I	
Pierce	Laborers	Raker - Asphalt	$44.00	7A	3I	
Pierce	Laborers	Re-timberman	$44.00	7A	3I	
Pierce	Laborers	Remote Equipment Operator	$43.46	7A	3I	
Pierce	Laborers	Rigger/signal Person	$43.46	7A	3I	
Pierce	Laborers	Rip Rap Person	$42.67	7A	3I	
Pierce	Laborers	Rivet Buster	$43.46	7A	3I	
Pierce	Laborers	Rodder	$43.46	7A	3I	
Pierce	Laborers	Scaffold Erector	$42.67	7A	3I	
Pierce	Laborers	Scale Person	$42.67	7A	3I	
Pierce	Laborers	Sloper (over 20")	$43.46	7A	3I	
Pierce	Laborers	Sloper Sprayer	$42.67	7A	3I	
Pierce	Laborers	Spreader (concrete)	$43.46	7A	3I	
Pierce	Laborers	Stake Hopper	$42.67	7A	3I	
Pierce	Laborers	Stock Piler	$42.67	7A	3I	
Pierce	Laborers	Tamper & Similar Electric, Air & Gas Operated Tools	$43.46	7A	3I	
Pierce	Laborers	Tamper (multiple & Self-propelled)	$43.46	7A	3I	
Pierce	Laborers	Timber Person - Sewer (lagger, Shorer & Cribber)	$43.46	7A	3I	
Pierce	Laborers	Toolroom Person (at Jobsite)	$42.67	7A	3I	
Pierce	Laborers	Topper	$42.67	7A	3I	
Pierce	Laborers	Track Laborer	$42.67	7A	3I	
Pierce	Laborers	Track Liner (power)	$43.46	7A	3I	
Pierce	Laborers	Traffic Control Laborer	$38.68	7A	3I	8R
Pierce	Laborers	Traffic Control Supervisor	$38.68	7A	3I	8R
Pierce	Laborers	Truck Spotter	$42.67	7A	3I	
Pierce	Laborers	Tugger Operator	$43.46	7A	3I	
Pierce	Laborers	Tunnel Work-Compressed Air Worker 0-30 psi	$64.99	7A	3I	8Q
Pierce	Laborers	Tunnel Work-Compressed Air Worker 30.01-44.00 psi	$70.02	7A	3I	8Q
Pierce	Laborers	Tunnel Work-Compressed Air Worker 44.01-54.00 psi	$73.70	7A	3I	8Q

Pierce	Laborers	Tunnel Work-Compressed Air Worker 54.01-60.00 psi	$79.40	7A	3I	8Q
Pierce	Laborers	Tunnel Work-Compressed Air Worker 60.01-64.00 psi	$81.52	7A	3I	8Q
Pierce	Laborers	Tunnel Work-Compressed Air Worker 64.01-68.00 psi	$86.62	7A	3I	8Q
Pierce	Laborers	Tunnel Work-Compressed Air Worker 68.01-70.00 psi	$88.52	7A	3I	8Q
Pierce	Laborers	Tunnel Work-Compressed Air Worker 70.01-72.00 psi	$90.52	7A	3I	8Q
Pierce	Laborers	Tunnel Work-Compressed Air Worker 72.01-74.00 psi	$92.52	7A	3I	8Q
Pierce	Laborers	Tunnel Work-Guage and Lock Tender	$44.10	7A	3I	8Q
Pierce	Laborers	Tunnel Work-Miner	$44.10	7A	3I	8Q
Pierce	Laborers	Vibrator	$43.46	7A	3I	
Pierce	Laborers	Vinyl Seamer	$42.67	7A	3I	
Pierce	Laborers	Watchman	$32.87	7A	3I	
Pierce	Laborers	Welder	$43.46	7A	3I	
Pierce	Laborers	Well Point Laborer	$43.46	7A	3I	
Pierce	Laborers	Window Washer/cleaner	$32.87	7A	3I	
Pierce	Laborers - Underground Sewer & Water	General Laborer & Topman	$42.67	7A	3I	
Pierce	Laborers - Underground Sewer & Water	Pipe Layer	$43.46	7A	3I	
Pierce	Landscape Construction	Irrigation Or Lawn Sprinkler Installers	$17.07		1	
Pierce	Landscape Construction	Landscape Equipment Operators Or Truck Drivers	$14.55		1	
Pierce	Landscape Construction	Landscaping Or Planting Laborers	$17.07		1	
Pierce	Lathers	Journey Level	$52.32	5D	1H	
Pierce	Marble Setters	Journey Level	$51.32	5A	1M	
Pierce	Metal Fabrication (In Shop)	Fitter	$15.25		1	
Pierce	Metal Fabrication (In Shop)	Laborer	$10.32		1	
Pierce	Metal Fabrication (In Shop)	Machine Operator	$13.98		1	
Pierce	Metal Fabrication (In Shop)	Welder	$13.98		1	
Pierce	Millwright	Journey Level	$53.42	5D	4C	
Pierce	Modular Buildings	Journey Level	$9.32		1	
Pierce	Painters	Journey Level	$37.80	6Z	2B	
Pierce	Pile Driver	Journey Level	$52.57	5D	4C	
Pierce	Plasterers	Journey Level	$50.42	7Q	1R	
Pierce	Playground & Park Equipment Installers	Journey Level	$9.73		1	
Pierce	Plumbers & Pipefitters	Journey Level	$62.57	5A	1G	
Pierce	Power Equipment Operators	Asphalt Plant Operator	$55.24	7A	3C	8P
Pierce	Power Equipment Operators	Assistant Engineers	$51.97	7A	3C	8P

Pierce	Power Equipment Operators	Barrier Machine (zipper)	$54.75	7A	3C	8P
Pierce	Power Equipment Operators	Batch Plant Operator: Concrete	$54.75	7A	3C	8P
Pierce	Power Equipment Operators	Bobcat	$51.97	7A	3C	8P
Pierce	Power Equipment Operators	Brokk - Remote Demolition Equipment	$51.97	7A	3C	8P
Pierce	Power Equipment Operators	Brooms	$51.97	7A	3C	8P
Pierce	Power Equipment Operators	Bump Cutter	$54.75	7A	3C	8P
Pierce	Power Equipment Operators	Cableways	$55.24	7A	3C	8P
Pierce	Power Equipment Operators	Chipper	$54.75	7A	3C	8P
Pierce	Power Equipment Operators	Compressor	$51.97	7A	3C	8P
Pierce	Power Equipment Operators	Concrete Pump: Truck Mount With Boom Attachment Over 42m	$55.24	7A	3C	8P
Pierce	Power Equipment Operators	Concrete Finish Machine -laser Screed	$51.97	7A	3C	8P
Pierce	Power Equipment Operators	Concrete Pump - Mounted Or Trailer High Pressure Line Pump, Pump High Pressure	$54.33	7A	3C	8P
Pierce	Power Equipment Operators	Concrete Pump: Truck Mount With Boom Attachment Up To 42m	$54.75	7A	3C	8P
Pierce	Power Equipment Operators	Conveyors	$54.33	7A	3C	8P
Pierce	Power Equipment Operators	Cranes, 100 Tons - 199 Tons, Or 150 Ft Of Boom (including Jib With Attachments)	$55.79	7A	3C	8P
Pierce	Power Equipment Operators	Cranes, 200 Tons To 300 Tons, Or 250 Ft Of Boom (including Jib With Attachments)	$56.36	7A	3C	8P
Pierce	Power Equipment Operators	Cranes: 20 Tons Through 44 Tons With Attachments	$54.75	7A	3C	8P
Pierce	Power Equipment Operators	Cranes: 45 Tons Through 99 Tons, Under 150' Of Boom (including Jib With Attachments)	$55.24	7A	3C	8P
Pierce	Power Equipment Operators	Cranes: A-frame - 10 Tons And Under	$51.97	7A	3C	8P
Pierce	Power Equipment Operators	Cranes: Friction 100 Tons Through 199 Tons	$56.36	7A	3C	8P
Pierce	Power Equipment Operators	Cranes: Friction Over 200 Tons	$56.92	7A	3C	8P
Pierce	Power Equipment Operators	Cranes: Over 300 Tons, Or 300' Of Boom (Including Jib With Attachments)	$56.92	7A	3C	8P
Pierce	Power Equipment Operators	Cranes: Through 19 Tons With Attachments A-frame Over 10 Tons	$54.33	7A	3C	8P
Pierce	Power Equipment Operators	Crusher	$54.75	7A	3C	8P
Pierce	Power Equipment Operators	Deck Engineer/deck Winches (power)	$54.75	7A	3C	8P
Pierce	Power Equipment Operators	Derricks, On Building Work	$55.24	7A	3C	8P

Pierce	Power Equipment Operators	Dozers D-9 & Under	$54.33	7A	3C	8P
Pierce	Power Equipment Operators	Drill Oilers: Auger Type, Truck Or Crane Mount	$54.33	7A	3C	8P
Pierce	Power Equipment Operators	Drilling Machine	$54.75	7A	3C	8P
Pierce	Power Equipment Operators	Elevator And Man-lift: Permanent And Shaft Type	$51.97	7A	3C	8P
Pierce	Power Equipment Operators	Finishing Machine, Bidwell And Gamaco & Similar Equipment	$54.75	7A	3C	8P
Pierce	Power Equipment Operators	Forklift: 3000 Lbs And Over With Attachments	$54.33	7A	3C	8P
Pierce	Power Equipment Operators	Forklifts: Under 3000 Lbs. With Attachments	$51.97	7A	3C	8P
Pierce	Power Equipment Operators	Grade Engineer: Using Blueprints, Cut Sheets,etc.	$54.75	7A	3C	8P
Pierce	Power Equipment Operators	Gradechecker/stakeman	$51.97	7A	3C	8P
Pierce	Power Equipment Operators	Guardrail Punch	$54.75	7A	3C	8P
Pierce	Power Equipment Operators	Hard Tail End Dump Articulating Off- Road Equipment 45 Yards. & Over	$55.24	7A	3C	8P
Pierce	Power Equipment Operators	Hard Tail End Dump Articulating Off-road Equipment Under 45 Yards	$54.75	7A	3C	8P
Pierce	Power Equipment Operators	Horizontal/directional Drill Locator	$54.33	7A	3C	8P
Pierce	Power Equipment Operators	Horizontal/directional Drill Operator	$54.75	7A	3C	8P
Pierce	Power Equipment Operators	Hydralifts/Boom Trucks Over 10 Tons	$54.33	7A	3C	8P
Pierce	Power Equipment Operators	Hydralifts/boom Trucks, 10 Tons And Under	$51.97	7A	3C	8P
Pierce	Power Equipment Operators	Loader, Overhead 8 Yards. & Over	$55.79	7A	3C	8P
Pierce	Power Equipment Operators	Loader, Overhead, 6 Yards. But Not Including 8 Yards	$55.24	7A	3C	8P
Pierce	Power Equipment Operators	Loaders, Overhead Under 6 Yards	$54.75	7A	3C	8P
Pierce	Power Equipment Operators	Loaders, Plant Feed	$54.75	7A	3C	8P
Pierce	Power Equipment Operators	Loaders: Elevating Type Belt	$54.33	7A	3C	8P
Pierce	Power Equipment Operators	Locomotives, All	$54.75	7A	3C	8P
Pierce	Power Equipment Operators	Material Transfer Device	$54.75	7A	3C	8P
Pierce	Power Equipment Operators	Mechanics, All (Leadmen - $0.50 Per Hour Over Mechanic)	$55.79	7A	3C	8P
Pierce	Power Equipment Operators	Motor Patrol Grader - Non-finishing	$54.33	7A	3C	8P
Pierce	Power Equipment Operators	Motor Patrol Graders, Finishing	$55.24	7A	3C	8P
Pierce	Power Equipment Operators	Mucking Machine, Mole, Tunnel Drill, Boring, Road Header And/or Shield	$55.24	7A	3C	8P
Pierce	Power Equipment Operators	Oil Distributors, Blower	$51.97	7A	3C	8P

		Distribution & Mulch Seeding Operator				
Pierce	Power Equipment Operators	Outside Hoists (elevators And Manlifts), Air Tuggers,strato	$54.33	7A	3C	8P
Pierce	Power Equipment Operators	Overhead, Bridge Type Crane: 20 Tons Through 44 Tons	$54.75	7A	3C	8P
Pierce	Power Equipment Operators	Overhead, Bridge Type: 100 Tons And Over	$55.79	7A	3C	8P
Pierce	Power Equipment Operators	Overhead, Bridge Type: 45 Tons Through 99 Tons	$55.24	7A	3C	8P
Pierce	Power Equipment Operators	Pavement Breaker	$51.97	7A	3C	8P
Pierce	Power Equipment Operators	Pile Driver (other Than Crane Mount)	$54.75	7A	3C	8P
Pierce	Power Equipment Operators	Plant Oiler - Asphalt, Crusher	$54.33	7A	3C	8P
Pierce	Power Equipment Operators	Posthole Digger, Mechanical	$51.97	7A	3C	8P
Pierce	Power Equipment Operators	Power Plant	$51.97	7A	3C	8P
Pierce	Power Equipment Operators	Pumps - Water	$51.97	7A	3C	8P
Pierce	Power Equipment Operators	Quad 9, HD 41, D10 And Over	$55.24	7A	3C	8P
Pierce	Power Equipment Operators	Quick Tower - No Cab, Under 100 Feet In Height Based To Boom	$51.97	7A	3C	8P
Pierce	Power Equipment Operators	Remote Control Operator On Rubber Tired Earth Moving Equipment	$55.24	7A	3C	8P
Pierce	Power Equipment Operators	Rigger And Bellman	$51.97	7A	3C	8P
Pierce	Power Equipment Operators	Rollagon	$55.24	7A	3C	8P
Pierce	Power Equipment Operators	Roller, Other Than Plant Mix	$51.97	7A	3C	8P
Pierce	Power Equipment Operators	Roller, Plant Mix Or Multi-lift Materials	$54.33	7A	3C	8P
Pierce	Power Equipment Operators	Roto-mill, Roto-grinder	$54.75	7A	3C	8P
Pierce	Power Equipment Operators	Saws - Concrete	$54.33	7A	3C	8P
Pierce	Power Equipment Operators	Scraper, Self Propelled Under 45 Yards	$54.75	7A	3C	8P
Pierce	Power Equipment Operators	Scrapers - Concrete & Carry All	$54.33	7A	3C	8P
Pierce	Power Equipment Operators	Scrapers, Self-propelled: 45 Yards And Over	$55.24	7A	3C	8P
Pierce	Power Equipment Operators	Service Engineers - Equipment	$54.33	7A	3C	8P
Pierce	Power Equipment Operators	Shotcrete/gunite Equipment	$51.97	7A	3C	8P
Pierce	Power Equipment Operators	Shovel , Excavator, Backhoe, Tractors Under 15 Metric Tons.	$54.33	7A	3C	8P
Pierce	Power Equipment Operators	Shovel, Excavator, Backhoe: Over 30 Metric Tons To 50 Metric Tons	$55.24	7A	3C	8P
Pierce	Power Equipment Operators	Shovel, Excavator, Backhoes, Tractors: 15 To 30 Metric Tons	$54.75	7A	3C	8P
Pierce	Power Equipment Operators	Shovel, Excavator, Backhoes: Over 50 Metric Tons To 90 Metric Tons	$55.79	7A	3C	8P

Pierce	Power Equipment Operators	Shovel, Excavator, Backhoes: Over 90 Metric Tons	$56.36	7A	3C	8P
Pierce	Power Equipment Operators	Slipform Pavers	$55.24	7A	3C	8P
Pierce	Power Equipment Operators	Spreader, Topsider & Screedman	$55.24	7A	3C	8P
Pierce	Power Equipment Operators	Subgrader Trimmer	$54.75	7A	3C	8P
Pierce	Power Equipment Operators	Tower Bucket Elevators	$54.33	7A	3C	8P
Pierce	Power Equipment Operators	Tower Crane Over 175'in Height, Base To Boom	$56.36	7A	3C	8P
Pierce	Power Equipment Operators	Tower Crane Up: To 175' In Height, Base To Boom	$55.79	7A	3C	8P
Pierce	Power Equipment Operators	Transporters, All Track Or Truck Type	$55.24	7A	3C	8P
Pierce	Power Equipment Operators	Trenching Machines	$54.33	7A	3C	8P
Pierce	Power Equipment Operators	Truck Crane Oiler/driver - 100 Tons And Over	$54.75	7A	3C	8P
Pierce	Power Equipment Operators	Truck Crane Oiler/driver Under 100 Tons	$54.33	7A	3C	8P
Pierce	Power Equipment Operators	Truck Mount Portable Conveyor	$54.75	7A	3C	8P
Pierce	Power Equipment Operators	Welder	$55.24	7A	3C	8P
Pierce	Power Equipment Operators	Wheel Tractors, Farmall Type	$51.97	7A	3C	8P
Pierce	Power Equipment Operators	Yo Yo Pay Dozer	$54.75	7A	3C	8P
Pierce	Power Equipment Operators-Underground Sewer & Water	Asphalt Plant Operator	$55.24	7A	3C	8P
Pierce	Power Equipment Operators-Underground Sewer & Water	Assistant Engineers	$51.97	7A	3C	8P
Pierce	Power Equipment Operators-Underground Sewer & Water	Barrier Machine (zipper)	$54.75	7A	3C	8P
Pierce	Power Equipment Operators-Underground Sewer & Water	Batch Plant Operator: Concrete	$54.75	7A	3C	8P
Pierce	Power Equipment Operators-Underground Sewer & Water	Bobcat	$51.97	7A	3C	8P
Pierce	Power Equipment Operators-Underground Sewer & Water	Brokk - Remote Demolition Equipment	$51.97	7A	3C	8P
Pierce	Power Equipment Operators-Underground Sewer & Water	Brooms	$51.97	7A	3C	8P
Pierce	Power Equipment Operators-Underground Sewer & Water	Bump Cutter	$54.75	7A	3C	8P
Pierce	Power Equipment Operators-Underground Sewer & Water	Cableways	$55.24	7A	3C	8P
Pierce	Power Equipment Operators-Underground Sewer & Water	Chipper	$54.75	7A	3C	8P
Pierce	Power Equipment Operators-Underground Sewer & Water	Compressor	$51.97	7A	3C	8P
Pierce	Power Equipment Operators-Underground Sewer & Water	Concrete Pump: Truck Mount With Boom Attachment Over 42m	$55.24	7A	3C	8P
Pierce	Power Equipment Operators-Underground Sewer & Water	Concrete Finish Machine -laser Screed	$51.97	7A	3C	8P

Pierce	Power Equipment Operators-Underground Sewer & Water	Concrete Pump - Mounted Or Trailer High Pressure Line Pump, Pump High Pressure	$54.33	7A	3C	8P
Pierce	Power Equipment Operators-Underground Sewer & Water	Concrete Pump: Truck Mount With Boom Attachment Up To 42m	$54.75	7A	3C	8P
Pierce	Power Equipment Operators-Underground Sewer & Water	Conveyors	$54.33	7A	3C	8P
Pierce	Power Equipment Operators-Underground Sewer & Water	Cranes, 100 Tons - 199 Tons, Or 150 Ft Of Boom (including Jib With Attachments)	$55.79	7A	3C	8P
Pierce	Power Equipment Operators-Underground Sewer & Water	Cranes, 200 Tons To 300 Tons, Or 250 Ft Of Boom (including Jib With Attachments)	$56.36	7A	3C	8P
Pierce	Power Equipment Operators-Underground Sewer & Water	Cranes: 20 Tons Through 44 Tons With Attachments	$54.75	7A	3C	8P
Pierce	Power Equipment Operators-Underground Sewer & Water	Cranes: 45 Tons Through 99 Tons, Under 150' Of Boom (including Jib With Attachments)	$55.24	7A	3C	8P
Pierce	Power Equipment Operators-Underground Sewer & Water	Cranes: A-frame - 10 Tons And Under	$51.97	7A	3C	8P
Pierce	Power Equipment Operators-Underground Sewer & Water	Cranes: Friction 100 Tons Through 199 Tons	$56.36	7A	3C	8P
Pierce	Power Equipment Operators-Underground Sewer & Water	Cranes: Friction Over 200 Tons	$56.92	7A	3C	8P
Pierce	Power Equipment Operators-Underground Sewer & Water	Cranes: Over 300 Tons, Or 300' Of Boom (Including Jib With Attachments)	$56.92	7A	3C	8P
Pierce	Power Equipment Operators-Underground Sewer & Water	Cranes: Through 19 Tons With Attachments A-frame Over 10 Tons	$54.33	7A	3C	8P
Pierce	Power Equipment Operators-Underground Sewer & Water	Crusher	$54.75	7A	3C	8P
Pierce	Power Equipment Operators-Underground Sewer & Water	Deck Engineer/deck Winches (power)	$54.75	7A	3C	8P
Pierce	Power Equipment Operators-Underground Sewer & Water	Derricks, On Building Work	$55.24	7A	3C	8P
Pierce	Power Equipment Operators-Underground Sewer & Water	Dozers D-9 & Under	$54.33	7A	3C	8P
Pierce	Power Equipment Operators-Underground Sewer & Water	Drill Oilers: Auger Type, Truck Or Crane Mount	$54.33	7A	3C	8P
Pierce	Power Equipment Operators-Underground Sewer & Water	Drilling Machine	$54.75	7A	3C	8P
Pierce	Power Equipment Operators-Underground Sewer & Water	Elevator And Man-lift: Permanent And Shaft Type	$51.97	7A	3C	8P
Pierce	Power Equipment Operators-Underground Sewer & Water	Finishing Machine, Bidwell And Gamaco & Similar Equipment	$54.75	7A	3C	8P
Pierce	Power Equipment Operators-Underground Sewer & Water	Forklift: 3000 Lbs And Over With Attachments	$54.33	7A	3C	8P
Pierce	Power Equipment Operators-	Forklifts: Under 3000 Lbs. With	$51.97	7A	3C	8P

	Underground Sewer & Water	Attachments				
Pierce	Power Equipment Operators-Underground Sewer & Water	Grade Engineer: Using Blueprints, Cut Sheets,etc.	$54.75	7A	3C	8P
Pierce	Power Equipment Operators-Underground Sewer & Water	Gradechecker/stakeman	$51.97	7A	3C	8P
Pierce	Power Equipment Operators-Underground Sewer & Water	Guardrail Punch	$54.75	7A	3C	8P
Pierce	Power Equipment Operators-Underground Sewer & Water	Hard Tail End Dump Articulating Off- Road Equipment 45 Yards. & Over	$55.24	7A	3C	8P
Pierce	Power Equipment Operators-Underground Sewer & Water	Hard Tail End Dump Articulating Off-road Equipment Under 45 Yards	$54.75	7A	3C	8P
Pierce	Power Equipment Operators-Underground Sewer & Water	Horizontal/directional Drill Locator	$54.33	7A	3C	8P
Pierce	Power Equipment Operators-Underground Sewer & Water	Horizontal/directional Drill Operator	$54.75	7A	3C	8P
Pierce	Power Equipment Operators-Underground Sewer & Water	Hydralifts/Boom Trucks Over 10 Tons	$54.33	7A	3C	8P
Pierce	Power Equipment Operators-Underground Sewer & Water	Hydralifts/boom Trucks, 10 Tons And Under	$51.97	7A	3C	8P
Pierce	Power Equipment Operators-Underground Sewer & Water	Loader, Overhead 8 Yards. & Over	$55.79	7A	3C	8P
Pierce	Power Equipment Operators-Underground Sewer & Water	Loader, Overhead, 6 Yards. But Not Including 8 Yards	$55.24	7A	3C	8P
Pierce	Power Equipment Operators-Underground Sewer & Water	Loaders, Overhead Under 6 Yards	$54.75	7A	3C	8P
Pierce	Power Equipment Operators-Underground Sewer & Water	Loaders, Plant Feed	$54.75	7A	3C	8P
Pierce	Power Equipment Operators-Underground Sewer & Water	Loaders: Elevating Type Belt	$54.33	7A	3C	8P
Pierce	Power Equipment Operators-Underground Sewer & Water	Locomotives, All	$54.75	7A	3C	8P
Pierce	Power Equipment Operators-Underground Sewer & Water	Material Transfer Device	$54.75	7A	3C	8P
Pierce	Power Equipment Operators-Underground Sewer & Water	Mechanics, All (Leadmen - $0.50 Per Hour Over Mechanic)	$55.79	7A	3C	8P
Pierce	Power Equipment Operators-Underground Sewer & Water	Motor Patrol Grader - Non-finishing	$54.33	7A	3C	8P
Pierce	Power Equipment Operators-Underground Sewer & Water	Motor Patrol Graders, Finishing	$55.24	7A	3C	8P
Pierce	Power Equipment Operators-Underground Sewer & Water	Mucking Machine, Mole, Tunnel Drill, Boring, Road Header And/or Shield	$55.24	7A	3C	8P
Pierce	Power Equipment Operators-Underground Sewer & Water	Oil Distributors, Blower Distribution & Mulch Seeding Operator	$51.97	7A	3C	8P
Pierce	Power Equipment Operators-Underground Sewer & Water	Outside Hoists (elevators And Manlifts), Air Tuggers,strato	$54.33	7A	3C	8P
Pierce	Power Equipment Operators-	Overhead, Bridge Type Crane:	$54.75	7A	3C	8P

	Underground Sewer & Water	20 Tons Through 44 Tons				
Pierce	Power Equipment Operators-Underground Sewer & Water	Overhead, Bridge Type: 100 Tons And Over	$55.79	7A	3C	8P
Pierce	Power Equipment Operators-Underground Sewer & Water	Overhead, Bridge Type: 45 Tons Through 99 Tons	$55.24	7A	3C	8P
Pierce	Power Equipment Operators-Underground Sewer & Water	Pavement Breaker	$51.97	7A	3C	8P
Pierce	Power Equipment Operators-Underground Sewer & Water	Pile Driver (other Than Crane Mount)	$54.75	7A	3C	8P
Pierce	Power Equipment Operators-Underground Sewer & Water	Plant Oiler - Asphalt, Crusher	$54.33	7A	3C	8P
Pierce	Power Equipment Operators-Underground Sewer & Water	Posthole Digger, Mechanical	$51.97	7A	3C	8P
Pierce	Power Equipment Operators-Underground Sewer & Water	Power Plant	$51.97	7A	3C	8P
Pierce	Power Equipment Operators-Underground Sewer & Water	Pumps - Water	$51.97	7A	3C	8P
Pierce	Power Equipment Operators-Underground Sewer & Water	Quad 9, HD 41, D10 And Over	$55.24	7A	3C	8P
Pierce	Power Equipment Operators-Underground Sewer & Water	Quick Tower - No Cab, Under 100 Feet In Height Based To Boom	$51.97	7A	3C	8P
Pierce	Power Equipment Operators-Underground Sewer & Water	Remote Control Operator On Rubber Tired Earth Moving Equipment	$55.24	7A	3C	8P
Pierce	Power Equipment Operators-Underground Sewer & Water	Rigger And Bellman	$51.97	7A	3C	8P
Pierce	Power Equipment Operators-Underground Sewer & Water	Rollagon	$55.24	7A	3C	8P
Pierce	Power Equipment Operators-Underground Sewer & Water	Roller, Other Than Plant Mix	$51.97	7A	3C	8P
Pierce	Power Equipment Operators-Underground Sewer & Water	Roller, Plant Mix Or Multi-lift Materials	$54.33	7A	3C	8P
Pierce	Power Equipment Operators-Underground Sewer & Water	Roto-mill, Roto-grinder	$54.75	7A	3C	8P
Pierce	Power Equipment Operators-Underground Sewer & Water	Saws - Concrete	$54.33	7A	3C	8P
Pierce	Power Equipment Operators-Underground Sewer & Water	Scraper, Self Propelled Under 45 Yards	$54.75	7A	3C	8P
Pierce	Power Equipment Operators-Underground Sewer & Water	Scrapers - Concrete & Carry All	$54.33	7A	3C	8P
Pierce	Power Equipment Operators-Underground Sewer & Water	Scrapers, Self-propelled: 45 Yards And Over	$55.24	7A	3C	8P
Pierce	Power Equipment Operators-Underground Sewer & Water	Service Engineers - Equipment	$54.33	7A	3C	8P
Pierce	Power Equipment Operators-Underground Sewer & Water	Shotcrete/gunite Equipment	$51.97	7A	3C	8P
Pierce	Power Equipment Operators-Underground Sewer & Water	Shovel , Excavator, Backhoe, Tractors Under 15 Metric Tons.	$54.33	7A	3C	8P
Pierce	Power Equipment Operators-	Shovel, Excavator, Backhoe:	$55.24	7A	3C	8P

	Underground Sewer & Water	Over 30 Metric Tons To 50 Metric Tons				
Pierce	Power Equipment Operators-Underground Sewer & Water	Shovel, Excavator, Backhoes, Tractors: 15 To 30 Metric Tons	$54.75	7A	3C	8P
Pierce	Power Equipment Operators-Underground Sewer & Water	Shovel, Excavator, Backhoes: Over 50 Metric Tons To 90 Metric Tons	$55.79	7A	3C	8P
Pierce	Power Equipment Operators-Underground Sewer & Water	Shovel, Excavator, Backhoes: Over 90 Metric Tons	$56.36	7A	3C	8P
Pierce	Power Equipment Operators-Underground Sewer & Water	Slipform Pavers	$55.24	7A	3C	8P
Pierce	Power Equipment Operators-Underground Sewer & Water	Spreader, Topsider & Screedman	$55.24	7A	3C	8P
Pierce	Power Equipment Operators-Underground Sewer & Water	Subgrader Trimmer	$54.75	7A	3C	8P
Pierce	Power Equipment Operators-Underground Sewer & Water	Tower Bucket Elevators	$54.33	7A	3C	8P
Pierce	Power Equipment Operators-Underground Sewer & Water	Tower Crane Over 175'in Height, Base To Boom	$56.36	7A	3C	8P
Pierce	Power Equipment Operators-Underground Sewer & Water	Tower Crane: Up To 175' In Height, Base To Boom	$55.79	7A	3C	8P
Pierce	Power Equipment Operators-Underground Sewer & Water	Transporters, All Track Or Truck Type	$55.24	7A	3C	8P
Pierce	Power Equipment Operators-Underground Sewer & Water	Trenching Machines	$54.33	7A	3C	8P
Pierce	Power Equipment Operators-Underground Sewer & Water	Truck Crane Oiler/driver - 100 Tons And Over	$54.75	7A	3C	8P
Pierce	Power Equipment Operators-Underground Sewer & Water	Truck Crane Oiler/driver Under 100 Tons	$54.33	7A	3C	8P
Pierce	Power Equipment Operators-Underground Sewer & Water	Truck Mount Portable Conveyor	$54.75	7A	3C	8P
Pierce	Power Equipment Operators-Underground Sewer & Water	Welder	$55.24	7A	3C	8P
Pierce	Power Equipment Operators-Underground Sewer & Water	Wheel Tractors, Farmall Type	$51.97	7A	3C	8P
Pierce	Power Equipment Operators-Underground Sewer & Water	Yo Yo Pay Dozer	$54.75	7A	3C	8P
Pierce	Power Line Clearance Tree Trimmers	Journey Level In Charge	$44.86	5A	4A	
Pierce	Power Line Clearance Tree Trimmers	Spray Person	$42.58	5A	4A	
Pierce	Power Line Clearance Tree Trimmers	Tree Equipment Operator	$44.86	5A	4A	
Pierce	Power Line Clearance Tree Trimmers	Tree Trimmer	$40.08	5A	4A	
Pierce	Power Line Clearance Tree Trimmers	Tree Trimmer Groundperson	$30.20	5A	4A	
Pierce	Refrigeration & Air Conditioning Mechanics	Mechanic	$63.76	5A	1G	
Pierce	Residential Brick Mason	Journey Level	$23.77		1	

Pierce	Residential Carpenters	Journey Level	$40.14	5D	4C	
Pierce	Residential Cement Masons	Journey Level	$52.38	7A	1M	
Pierce	Residential Drywall Applicators	Journey Level	$40.14	5D	4C	
Pierce	Residential Drywall Tapers	Journey Level	$52.37	5P	1E	
Pierce	Residential Electricians	JOURNEY LEVEL	$29.29		1	
Pierce	Residential Glaziers	Journey Level	$36.20	7L	1H	
Pierce	Residential Insulation Applicators	Journey Level	$18.70		1	
Pierce	Residential Laborers	Journey Level	$20.99		1	
Pierce	Residential Marble Setters	Journey Level	$22.67		1	
Pierce	Residential Painters	Journey Level	$26.13		1	
Pierce	Residential Plumbers & Pipefitters	Journey Level	$44.27	5A	1G	
Pierce	Residential Refrigeration & Air Conditioning Mechanics	Journey Level	$36.92	5A	1G	
Pierce	Residential Sheet Metal Workers	Journey Level (Field or Shop)	$42.58	7F	1R	
Pierce	Residential Soft Floor Layers	Journey Level	$42.41	5A	3D	
Pierce	Residential Sprinkler Fitters (Fire Protection)	Journey Level	$42.48	5C	2R	
Pierce	Residential Stone Masons	Journey Level	$22.67		1	
Pierce	Residential Terrazzo Workers	Journey Level	$9.32		1	
Pierce	Residential Terrazzo/Tile Finishers	Journey Level	$19.32		1	
Pierce	Residential Tile Setters	Journey Level	$9.32		1	
Pierce	Roofers	Journey Level	$44.39	5A	2O	
Pierce	Roofers	Using Irritable Bituminous Materials	$47.39	5A	2O	
Pierce	Sheet Metal Workers	Journey Level (Field or Shop)	$70.37	7F	1E	
Pierce	Shipbuilding & Ship Repair	Boilermaker	$40.72	7M	1H	
Pierce	Shipbuilding & Ship Repair	Carpenter	$33.71	6E	1B	
Pierce	Shipbuilding & Ship Repair	Electrician	$33.71	6E	1B	
Pierce	Shipbuilding & Ship Repair	Heat & Frost Insulator	$60.93	5J	1S	
Pierce	Shipbuilding & Ship Repair	Laborer	$19.10		1	
Pierce	Shipbuilding & Ship Repair	Machinist	$33.71	6E	1B	
Pierce	Shipbuilding & Ship Repair	Operator	$33.71	6E	1B	
Pierce	Shipbuilding & Ship Repair	Painter	$38.74	6A	1R	
Pierce	Shipbuilding & Ship Repair	Pipefitter	$33.71	6E	1B	
Pierce	Shipbuilding & Ship Repair	Rigger	$15.77		1	
Pierce	Shipbuilding & Ship Repair	Sandblaster	$38.74	6A	1R	
Pierce	Shipbuilding & Ship Repair	SHEET METAL	$35.83		1	
Pierce	Shipbuilding & Ship Repair	Shipfitter	$33.71	6E	1B	
Pierce	Shipbuilding & Ship Repair	Trucker	$15.75		1	
Pierce	Shipbuilding & Ship Repair	Warehouse	$13.75		1	
Pierce	Shipbuilding & Ship Repair	Welder/burner	$33.71	6E	1B	
Pierce	Sign Makers & Installers	Sign Installer	$26.17		1	

	(Electrical)					
Pierce	Sign Makers & Installers (Electrical)	Sign Maker	$20.33		1	
Pierce	Sign Makers & Installers (Non-Electrical)	Sign Installer	$33.43		1	
Pierce	Sign Makers & Installers (Non-Electrical)	Sign Maker	$22.79		1	
Pierce	Soft Floor Layers	Journey Level	$42.41	5A	3D	
Pierce	Solar Controls For Windows	Journey Level	$10.31		1	
Pierce	Sprinkler Fitters (Fire Protection)	Journey Level	$69.59	5C	1X	
Pierce	Stage Rigging Mechanics (Non Structural)	Journey Level	$13.23		1	
Pierce	Stone Masons	Journey Level	$51.32	5A	1M	
Pierce	Street And Parking Lot Sweeper Workers	Journey Level	$12.06		1	
Pierce	Surveyors	All Classifications	$35.68	Null	1	
Pierce	Telecommunication Technicians	Journey Level	$28.29		1	
Pierce	Telephone Line Construction - Outside	Cable Splicer	$36.96	5A	2B	
Pierce	Telephone Line Construction - Outside	Hole Digger/Ground Person	$20.49	5A	2B	
Pierce	Telephone Line Construction - Outside	Installer (Repairer)	$35.40	5A	2B	
Pierce	Telephone Line Construction - Outside	Special Aparatus Installer I	$36.96	5A	2B	
Pierce	Telephone Line Construction - Outside	Special Apparatus Installer II	$36.19	5A	2B	
Pierce	Telephone Line Construction - Outside	Telephone Equipment Operator (Heavy)	$36.96	5A	2B	
Pierce	Telephone Line Construction - Outside	Telephone Equipment Operator (Light)	$34.34	5A	2B	
Pierce	Telephone Line Construction - Outside	Telephone Lineperson	$34.34	5A	2B	
Pierce	Telephone Line Construction - Outside	Television Groundperson	$19.45	5A	2B	
Pierce	Telephone Line Construction - Outside	Television Lineperson/Installer	$25.89	5A	2B	
Pierce	Telephone Line Construction - Outside	Television System Technician	$30.97	5A	2B	
Pierce	Telephone Line Construction - Outside	Television Technician	$27.77	5A	2B	
Pierce	Telephone Line Construction - Outside	Tree Trimmer	$34.34	5A	2B	
Pierce	Terrazzo Workers	Journey Level	$46.96	5A	1M	
Pierce	Tile Setters	Journey Level	$46.96	5A	1M	
Pierce	Tile, Marble & Terrazzo Finishers	Journey Level	$20.74		1	

Pierce	Traffic Control Stripers	Journey Level	$43.11	7A	1K	
Pierce	Truck Drivers	Asphalt Mix	$22.49		1	
Pierce	Truck Drivers	Dump Truck	$22.56		1	
Pierce	Truck Drivers	Dump Truck And Trailer	$22.56		1	
Pierce	Truck Drivers	Other Trucks	$30.20		1	
Pierce	Truck Drivers	Transit Mixer	$33.17	6I	2H	
Pierce	Well Drillers & Irrigation Pump Installers	Irrigation Pump Installer	$16.09		1	
Pierce	Well Drillers & Irrigation Pump Installers	Oiler	$15.39		1	
Pierce	Well Drillers & Irrigation Pump Installers	Well Driller	$18.30		1	

Washington State Department of Labor and Industries
Policy Statement
(Regarding the Production of "Standard" or "Non-standard" Items)

Below is the department's (State L&I's) list of criteria to be used in determining whether a prefabricated item is "standard" or "non-standard". For items not appearing on WSDOT's predetermined list, these criteria shall be used by the Contractor (and the Contractor's subcontractors, agents to subcontractors, suppliers, manufacturers, and fabricators) to determine coverage under RCW 39.12. The production, in the State of Washington, of non-standard items is covered by RCW 39.12, and the production of standard items is not. The production of any item outside the State of Washington is not covered by RCW 39.12.

1. Is the item fabricated for a public works project? If not, it is not subject to RCW 39.12. If it is, go to question 2.

2. Is the item fabricated on the public works jobsite? If it is, the work is covered under RCW 39.12. If not, go to question 3.

3. Is the item fabricated in an assembly/fabrication plant set up for, and dedicated primarily to, the public works project? If it is, the work is covered by RCW 39.12. If not, go to question 4.

4. Does the item require any assembly, cutting, modification or other fabrication by the supplier? If not, the work is not covered by RCW 39.12. If yes, go to question 5.

5. Is the prefabricated item intended for the public works project typically an inventory item which could reasonably be sold on the general market? If not, the work is covered by RCW 39.12. If yes, go to question 6.

6. Does the specific prefabricated item, generally defined as standard, have any unusual characteristics such as shape, type of material, strength requirements, finish, etc? If yes, the work is covered under RCW 39.12.

Any firm with questions regarding the policy, WSDOT's Predetermined List, or for determinations of covered and non-covered workers shall be directed to State L&I at (360) 902-5330.

WSDOT's
Predetermined List for
Suppliers - Manufactures - Fabricator

Below is a list of potentially prefabricated items, originally furnished by WSDOT to Washington State Department of Labor and Industries, that may be considered non-standard and therefore covered by the prevailing wage law, RCW 39.12. Items marked with an X in the "YES" column should be considered to be non-standard and therefore covered by RCW 39.12. Items marked with an X in the "NO" column should be considered to be standard and therefore not covered. Of course, exceptions to this general list may occur, and in that case shall be evaluated according to the criteria described in State and L&I's policy statement.

	ITEM DESCRIPTION	YES	NO
1.	Metal rectangular frames, solid metal covers, herringbone grates, and bi-directional vaned grates for Catch Basin Types 1, 1L, 1P, and 2 and Concrete Inlets. See Std. Plans		X
2.	Metal circular frames (rings) and covers, circular grates, and prefabricated ladders for Manhole Types 1, 2, and 3, Drywell Types 1, 2, and 3 and Catch Basin Type 2. See Std. Plans		X
3.	Prefabricated steel grate supports and welded grates, metal frames and dual vaned grates, and Type 1, 2, and 3 structural tubing grates for Drop Inlets. See Std. Plans.		X
4.	Concrete Pipe - Plain Concrete pipe and reinforced concrete pipe Class 2 to 5 sizes smaller than 60 inch diameter.		X
5.	Concrete Pipe - Plain Concrete pipe and reinforced concrete pipe Class 2 to 5 sizes larger than 60 inch diameter.		X
6.	Corrugated Steel Pipe - Steel lock seam corrugated pipe for culverts and storm sewers, sizes 30 inch to 120 inches in diameter. May also be treated, 1 thru 5.		X
7.	Corrugated Aluminum Pipe - Aluminum lock seam corrugated pipe for culverts and storm sewers, sizes 30 inch to 120 inches in diameter. May also be treated, #5.		X

	ITEM DESCRIPTION	YES	NO
8.	Anchor Bolts & Nuts - Anchor Bolts and Nuts, for mounting sign structures, luminaries and other items, shall be made from commercial bolt stock. See Contract Plans and Std. Plans for size and material type.		X
9.	Aluminum Pedestrian Handrail - Pedestrian handrail conforming to the type and material specifications set forth in the contract plans. Welding of aluminum shall be in accordance with Section 9-28.14(3).	X	
10.	Major Structural Steel Fabrication - Fabrication of major steel items such as trusses, beams, girders, etc., for bridges.	X	
11.	Minor Structural Steel Fabrication - Fabrication of minor steel Items such as special hangers, brackets, access doors for structures, access ladders for irrigation boxes, bridge expansion joint systems, etc., involving welding, cutting, punching and/or boring of holes. See Contact Plans for item description and shop drawings.	X	
12.	Aluminum Bridge Railing Type BP - Metal bridge railing conforming to the type and material specifications set forth in the Contract Plans. Welding of aluminum shall be in accordance with Section 9-28.14(3).		X
13.	Concrete Piling--Precast-Prestressed concrete piling for use as 55 and 70 ton concrete piling. Concrete to conform to Section 9-19.1 of Std. Spec..	X	
14.	Precast Manhole Types 1, 2, and 3 with cones, adjustment sections and flat top slabs. See Std. Plans.		X
15.	Precast Drywell Types 1, 2, and with cones and adjustment Sections. See Std. Plans.		X
16.	Precast Catch Basin - Catch Basin type 1, 1L, 1P, and 2 With adjustment sections. See Std. Plans.		X

	ITEM DESCRIPTION	YES	NO
17.	Precast Concrete Inlet - with adjustment sections, See Std. Plans		X
18.	Precast Drop Inlet Type 1 and 2 with metal grate supports. See Std. Plans.		X
19.	Precast Grate Inlet Type 2 with extension and top units. See Std. Plans		X
20.	Metal frames, vaned grates, and hoods for Combination Inlets. See Std. Plans		X
21.	Precast Concrete Utility Vaults - Precast Concrete utility vaults of various sizes. Used for in ground storage of utility facilities and controls. See Contract Plans for size and construction requirements. Shop drawings are to be provided for approval prior to casting		X
22.	Vault Risers - For use with Valve Vaults and Utilities Vaults.		X
23.	Valve Vault - For use with underground utilities. See Contract Plans for details.		X
24.	Precast Concrete Barrier - Precast Concrete Barrier for use as new barrier or may also be used as Temporary Concrete Barrier. Only new state approved barrier may be used as permanent barrier.		X
25.	Reinforced Earth Wall Panels – Reinforced Earth Wall Panels in size and shape as shown in the Plans. Fabrication plant has annual approval for methods and materials to be used. See Shop Drawing. Fabrication at other locations may be approved, after facilities inspection, contact HQ. Lab.	X	
26.	Precast Concrete Walls - Precast Concrete Walls - tilt-up wall panel in size and shape as shown in Plans. Fabrication plant has annual approval for methods and materials to be used	X	

	ITEM DESCRIPTION	YES	NO
27.	Precast Railroad Crossings - Concrete Crossing Structure Slabs.	X	
28.	12, 18 and 26 inch Standard Precast Prestressed Girder – Standard Precast Prestressed Girder for use in structures. Fabricator plant has annual approval of methods and materials to be used. Shop Drawing to be provided for approval prior to casting girders. See Std. Spec. Section 6-02.3(25)A	X	
29.	Prestressed Concrete Girder Series 4-14 - Prestressed Concrete Girders for use in structures. Fabricator plant has annual approval of methods and materials to be used. Shop Drawing to be provided for approval prior to casting girders. See Std. Spec. Section 6-02.3(25)A .	X	
30.	Prestressed Tri-Beam Girder - Prestressed Tri-Beam Girders for use in structures. Fabricator plant has annual approval of methods and materials to be used. Shop Drawing to be provided for approval prior to casting girders. See Std. Spec. Section 6-02.3(25)A	X	
31.	Prestressed Precast Hollow-Core Slab – Precast Prestressed Hollow-core slab for use in structures. Fabricator plant has annual approval of methods and materials to be used. Shop Drawing to be provided for approval prior to casting girders. See Std. Spec. Section 6-02.3(25)A.	X	
32.	Prestressed-Bulb Tee Girder - Bulb Tee Prestressed Girder for use in structures. Fabricator plant has annual approval of methods and materials to be used. Shop Drawing to be provided for approval prior to casting girders. See Std. Spec. Section 6-02.3(25)A	X	
33.	Monument Case and Cover See Std. Plan.		X

	ITEM DESCRIPTION	YES	NO
34.	Cantilever Sign Structure - Cantilever Sign Structure fabricated from steel tubing meeting AASHTO-M-183. See Std. Plans, and Contract Plans for details. The steel structure shall be galvanized after fabrication in accordance with AASHTO-M-111.	X	
35.	Mono-tube Sign Structures - Mono-tube Sign Bridge fabricated to details shown in the Plans. Shop drawings for approval are required prior to fabrication.	X	
36.	Steel Sign Bridges - Steel Sign Bridges fabricated from steel tubing meeting AASHTO-M-138 for Aluminum Alloys. See Std. Plans, and Contract Plans for details. The steel structure shall be galvanized after fabrication in accordance with AASHTO-M-111.	X	
37.	Steel Sign Post - Fabricated Steel Sign Posts as detailed in Std Plans. Shop drawings for approval are to be provided prior to fabrication		X
38.	Light Standard-Prestressed - Spun, prestressed, hollow concrete poles.	X	
39.	Light Standards - Lighting Standards for use on highway illumination systems, poles to be fabricated to conform with methods and materials as specified on Std. Plans. See Specia Provisions for pre-approved drawings.	X	
40.	Traffic Signal Standards - Traffic Signal Standards for use on highway and/or street signal systems. Standards to be fabricated to conform with methods and material as specified on Std. Plans. See Special Provisions for pre-approved drawings	X	
41.	Precast Concrete Sloped Mountable Curb (Single and DualFaced) See Std. Plans.		X

	ITEM DESCRIPTION	YES	NO
42.	Traffic Signs - Prior to approval of a Fabricator of Traffic Signs, the sources of the following materials must be submitted and approved for reflective sheeting, legend material, and aluminum sheeting. **NOTE:** *** Fabrication inspection required. Only signs tagged "Fabrication Approved" by WSDOT Sign Fabrication Inspector to be installed	**X**	**X**
		Custom Message	Std Signing Message
43.	Cutting & bending reinforcing steel		**X**
44.	Guardrail components	**X**	**X**
		Custom End Sec	Standard Sec
45.	Aggregates/Concrete mixes	Covered by WAC 296-127-018	
46.	Asphalt	Covered by WAC 296-127-018	
47.	Fiber fabrics		**X**
48.	Electrical wiring/components		**X**
49.	treated or untreated timber pile		**X**
50.	Girder pads (elastomeric bearing)	**X**	
51.	Standard Dimension lumber		**X**
52.	Irrigation components		**X**

ITEM DESCRIPTION	YES	NO
53. Fencing materials		X
54. Guide Posts		X
55. Traffic Buttons		X
56. Epoxy		X
57. Cribbing		X
58. Water distribution materials		X
59. Steel "H" piles		X
60. Steel pipe for concrete pile casings		X
61. Steel pile tips, standard		X
62. Steel pile tips, custom	X	

Prefabricated items specifically produced for public works projects that are prefabricated in a county other than the county wherein the public works project is to be completed, the wage for the offsite prefabrication shall be the applicable prevailing wage for the county in which the actual prefabrication takes place.

It is the manufacturer of the prefabricated product to verify that the correct county wage rates are applied to work they perform.

See RCW 39.12.010
(The definition of "locality" in RCW 39.12.010(2) contains the phrase "wherein the physical work is being performed." The department interprets this phrase to mean the actual work site.

WSDOT's List of State Occupations not applicable to Heavy and Highway Construction Projects

This project is subject to the state hourly minimum rates for wages and fringe benefits in the contract provisions, as provided by the state Department of Labor and Industries.
The following list of occupations, is comprised of those occupations that are not normally used in the construction of heavy and highway projects.
When considering job classifications for use and / or payment when bidding on, or building heavy and highway construction projects for, or administered by WSDOT, these Occupations will be excepted from the included "Washington State Prevailing Wage Rates For Public Work Contracts" documents.

- Building Service Employees
- Electrical Fixture Maintenance Workers
- Electricians - Motor Shop
- Heating Equipment Mechanics
- Industrial Engine and Machine Mechanics
- Industrial Power Vacuum Cleaners
- Inspection, Cleaning, Sealing of Water Systems by Remote Control
- Laborers - Underground Sewer & Water
- Machinists (Hydroelectric Site Work)
- Modular Buildings
- Playground & Park Equipment Installers
- Power Equipment Operators - Underground Sewer & Water
- Residential *** ALL ASSOCIATED RATES ***
- Sign Makers and Installers (Non-Electrical)
- Sign Makers and Installers (Electrical)
- Stage Rigging Mechanics (Non Structural)

The following occupations may be used only as outlined in the preceding text concerning "WSDOT's list for Suppliers - Manufacturers - Fabricators"

- Fabricated Precast Concrete Products
- Metal Fabrication (In Shop)

Definitions for the Scope of Work for prevailing wages may be found at the Washington State Department of Labor and Industries web site and in WAC Chapter 296-127.

Washington State Department of Labor and Industries
Policy Statements
(Regarding Production and Delivery of Gravel, Concrete, Asphalt, etc.)

WAC 296-127-018 Agency filings affecting this section

Coverage and exemptions of workers involved in the production and delivery of gravel, concrete, asphalt, or similar materials.

(1) The materials covered under this section include but are not limited to: Sand, gravel, crushed rock, concrete, asphalt, or other similar materials.

(2) All workers, regardless of by whom employed, are subject to the provisions of chapter 39.12 RCW when they perform any or all of the following functions:

(a) They deliver or discharge any of the above-listed materials to a public works project site:

(i) At one or more point(s) directly upon the location where the material will be incorporated into the project; or

(ii) At multiple points at the project; or

(iii) Adjacent to the location and coordinated with the incorporation of those materials.

(b) They wait at or near a public works project site to perform any tasks subject to this section of the rule.

(c) They remove any materials from a public works construction site pursuant to contract requirements or specifications (e.g., excavated materials, materials from demolished structures, clean-up materials, etc.).

(d) They work in a materials production facility (e.g., batch plant, borrow pit, rock quarry, etc.,) which is established for a public works project for the specific, but not necessarily exclusive, purpose of supplying materials for the project.

(e) They deliver concrete to a public works site regardless of the method of incorporation.

(f) They assist or participate in the incorporation of any materials into the public works project.

(3) All travel time that relates to the work covered under subsection (2) of this section requires the payment of prevailing wages. Travel time includes time spent waiting to load, loading, transporting, waiting to unload, and delivering materials. Travel time would include all time spent in travel in support of a public works project whether the vehicle is empty or full. For example, travel time spent returning to a supply source to obtain another load of material for use on a public works site or returning to the public works site to obtain another load of excavated material is time spent in travel that is subject to prevailing wage. Travel to a supply source, including travel from a public works site, to obtain materials for use on a private project would not be travel subject to the prevailing wage.

(4) Workers are not subject to the provisions of chapter 39.12 RCW when they deliver materials to a stockpile.

(a) A "stockpile" is defined as materials delivered to a pile located away from the site of incorporation such that the stockpiled materials must be physically moved from the stockpile and transported to another location on the project site in order to be incorporated into the project.

(b) A stockpile does not include any of the functions described in subsection (2)(a) through (f) of this section; nor does a stockpile include materials delivered or distributed to multiple locations upon the project site; nor does a stockpile include materials dumped at the place of incorporation, or adjacent to the location and coordinated with the incorporation.

(5) The applicable prevailing wage rate shall be determined by the locality in which the work is performed. Workers subject to subsection (2)(d) of this section, who produce such materials at an off-site facility shall be paid the applicable prevailing wage rates for the county in which the off-site facility is located. Workers subject to subsection (2) of this section, who deliver such materials to a public works project site shall be paid the applicable prevailing wage rates for the county in which the public works project is located.

[Statutory Authority: Chapter 39.12 RCW, RCW 43.22.051 and 43.22.270. 08-24-101, § 296-127-018, filed 12/2/08, effective 1/2/09. Statutory Authority: Chapters 39.04 and 39.12 RCW and RCW 43.22.270. 92-01-104 and 92-08-101, § 296-127-018, filed 12/18/91 and 4/1/92, effective 8/31/92.]

PART VI

PLANS

PUBLIC WORKS DEPARTMENT
SPECIFICATION NO. PW14-0699N
OCTOBER 2014

ADA PEDESTRIAN IMPROVEMENTS (PHASE 2)

INDEX OF DRAWINGS	
SHEET	SHEET TITLE
1	COVER SHEET
2	SYMBOLS SHEET
3	PEOPLES COMMUNITY CENTER – DEMOLITION PLAN
4	PEOPLES COMMUNITY CENTER – DEVELOPED PLAN
5	PEOPLES COMMUNITY CENTER – STRIPING PLAN
6	PANTAGES THEATER – DEMOLITION PLAN
7	PANTAGES THEATER – DEVELOPED PLAN
8	PANTAGES THEATER – STRIPING PLAN
9	RIALTO THEATER – DEVELOPED PLAN
10	SWASEY BRANCH LIBRARY– DEMOLITION PLAN
11	SWASEY BRANCH LIBRARY– DEVELOPED PLAN
12	SWASEY BRANCH LIBRARY– STRIPING PLAN
13	NOTES AND DETAILS I
14	NOTES AND DETAILS II

① PEOPLES COMMUNITY CENTER
1602 MARTIN LUTHER KING WAY
A PORTION OF TAX PARCEL 2016220010
CIP-

② PANTAGES THEATER
901 BROADWAY
A PORTION OF TAX PARCEL 2009050010
CIP-

③ RIALTO THEATER
901 MARKET STREET
A PORTION OF TAX PARCEL 2009070010
CIP-

④ SWASEY BRANCH LIBRARY
7001 6TH AVENUE
A PORTION OF TAX PARCEL 4470000080
CIP-

GENERAL NOTE
AFTER BID AWARD, THE CONTRACTOR SHALL SCHEDULE WORK AT EACH FACILITY ONLY AFTER THOROUGHLY REVIEWING ALL ASPECTS OF EACH FACILITY'S OPERATION INCLUDING, BUT NOT LIMITED TO, PROGRAM/ DELIVERY/PICK-UP/ DROP-OFF SCHEDULES WITH THE FACILITY CONTACTS LISTED IN THE SPECIFICATIONS AND WITH CITY PERSONNEL. PEDESTRIAN ACCESS TO EACH FACILITY AND THROUGH THE CONSTRUCTION ZONE SHALL BE MAINTAINED AT ALL TIMES. PARKING AND VEHICULAR ACCESS SHALL BE COORDINATED WITH FACILITY STAFF AT EACH LOCATION. STORAGE OF MATERIALS AND EQUIPMENT AT EACH SITE SHALL BE APPROVED BY THE CITY INSPECTOR. SEE DIVISION 1 OF THE SPECIFICATIONS FOR ADDITIONAL REQUIREMENTS.

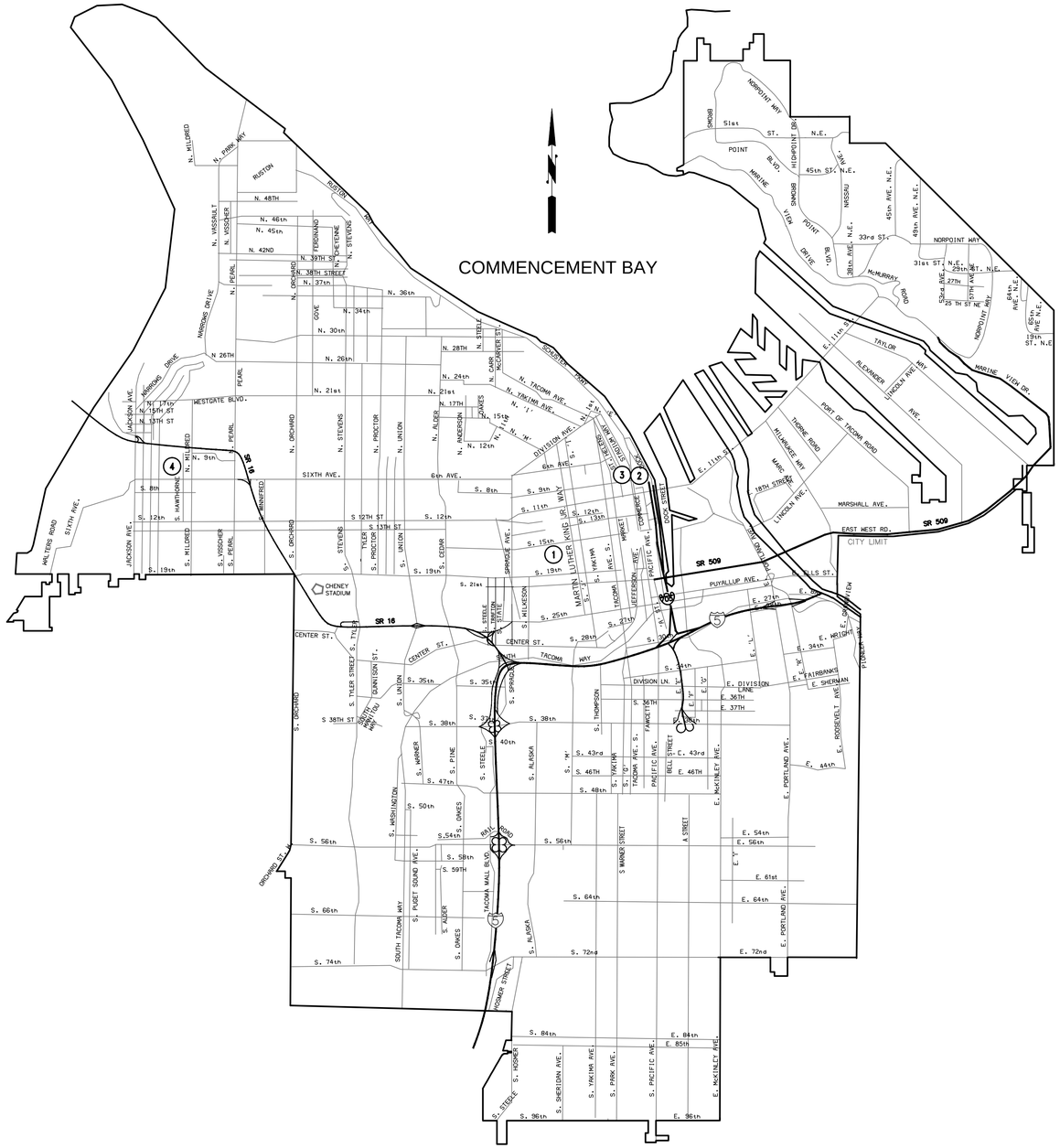

THESE DRAWINGS ARE NOT TO BE USED FOR CONSTRUCTION UNLESS SIGNED BY THE REVIEWING AGENCY

BID DOCUMENTS

NOTICE
ALTERATION OF THIS DOCUMENT SHALL INVALIDATE THE PROFESSIONAL SEAL AND SIGNATURE. PUBLICATION OF THIS DOCUMENT DOES NOT DEROGATE FROM RESERVED OWNERSHIP RIGHTS IN IT. THIS DOCUMENT IS FOR USE ONLY FOR THE PROJECT IDENTIFIED IN THE TITLE BLOCK AND IS NOT TO BE USED FOR REPAIR, REMODEL OR ADDITION TO THAT PROJECT OR FOR ANY OTHER PROJECT.

AHBL
TACOMA · SEATTLE
2215 North 30th Street, Suite 300, Tacoma, WA 98403 253.383.2422 TEL
1200 Sixth Avenue, Suite 1620, Seattle, WA 98101 206.267.2425 TEL
Civil Engineers
Structural Engineers
Landscape Architects
Community Planners
Land Surveyors
Neighbors

CALL 48 HOURS BEFORE YOU DIG 1-800-424-5555

CITY OF TACOMA
PUBLIC WORKS DEPT.
ENGINEERING DIVISION
747 MARKET STREET, ROOM 520
TACOMA, WA 98402
(253) 591-5500
FAX: (509) 591-5533

NO	REVISION	DATE	APPD
4			
3			
2			
1			

FINAL CONSTRUCTION CHECKED
BY
DATE
FIELD BOOKS

DATE: OCTOBER 2014 | SCALE: AS NOTED
DESIGNED: MS / AB | CHECKED: WJF
DRAWN: FAK | FILE NAME:
COVER SHEET

SEAN M. COMOLLI — STATE OF WASHINGTON — 20672 — REGISTERED PROFESSIONAL ENGINEER
9/16/2014

CITY OF TACOMA
DEPARTMENT OF PUBLIC WORKS
ENVIRONMENTAL SERVICES SCIENCE AND ENGINEERING

COVER SHEET
ADA PEDESTRIAN IMPROVEMENTS

WORK ORDER NO.
AHBL JOB NO. 211579.10
SHEET NO. SHEET 1 OF 14

REFERENCE LINETYPES

LINETYPE	DESCRIPTION
	PROPERTY LINE
	EASEMENT LINE
	RIGHT OF WAY
	CENTER LINE
	TEMPORARY CONSTRUCTION PERMIT LINE

FEATURE LINETYPES

EXISTING	PROPOSED	DESCRIPTION
		CURB & GUTTER
		EDGE OF ROAD
		GRAVEL ROAD
		GUARD RAIL
		TRAIL
		CHAIN LINK FENCE
		WOOD FENCE
		BRUSHLINE
		RAILROAD
		BUILDINGS
		WATER EDGE
		DRAINAGE DITCH
		RETAINING WALL
		CMU WALL
	TOP OF 2:1 FILL SLOPE, 2:1 (H:V), TOP OF CUT SLOPE, 2:1	CUT / FILL 2:1
		SILT FENCE
	C&G	CLEARING AND GRUBBING

UTILITY LINETYPES

EXISTING	PROPOSED	DESCRIPTION
W	W	WATER LINE
S	SS	SANITARY SEWER
D	D	STORM SEWER
P	P	POWER
TEL	TEL	TELEPHONE
G	G	GAS
TV	TV	CABLE TV
INT	INT	INTERCONNECT
FO	FO	FIBER OPTIC
LHT	LHT	STREET LIGHTING
TS	TS	TRAFFIC SIGNAL CONDUIT
TSFO	TSFO	TRAFFIC SIGNAL FIBEROPTIC CONDUIT

WATER SYMBOLS

EXIST.	PROP.	
		SPRINKLER HEAD
		FIRE HYDRANT
		GATE VALVE
		CROSS
		TEE
		REDUCER
		WATER METER

SEWER SYMBOLS

EXIST.	PROP.	
		MANHOLE
C		CLEAN OUT
		STORM CATCH BASIN
		STORM CULVERT
		RIP RAP
		AREA DRAIN

SURVEY SYMBOLS

EXIST.	
	SECTION CORNER
	QUARTER CORNER N/S
	QUARTER CORNER E/W
	SPOT ELEVATION
	MONUMENT
	REBAR & CAP

CITY OF TACOMA

BENCHMARK:
SBM/MCI INTERSECTION OF STREETNAME & STREETNAME
ELEVATION : xxx.xx
HORIZ. DATUM: N.A.D. 83/91
VERT. DATUM: N.G.V.D. 29

CITY OF TACOMA DATUM

NORTH ARROW

POWER SYMBOLS

EXIST.	PROP.	
		POWER POLE
P	P	POWER VAULT (UNDERGROUND)
P	P	POWER VAULT (ABOVE GROUND)
		POLE ANCHOR

COMMUNICATION SYMBOLS

EXIST.	PROP.	
		TELEPHONE PEDESTAL
T		TELEPHONE VAULT
T		TELEPHONE MANHOLE
		T.V. PEDESTAL

SURFACE SYMBOLS

EXIST.	PROP.	
BUS	BUS	TRANSIT PAD
		MAIL BOX
		BOLLARD
		SOIL BORING
		SIGN

NOTE BUBBLES

- POLE NOTE
- WIRE NOTE
- CONSTRUCTION NOTE
- SIGNAL/ILLUMINATION NOTE
- SIGNING NOTE
- CHANNELIZATION

MISCELLANEOUS SYMBOLS

- GAS VALVE

TRAFFIC SIGNAL INTERCONNECT AND LIGHTING SYMBOLS

EXIST.	PROP.	
		DIAMOND DETECTOR 6X8
		SQUARE DETECTOR 6X6
		CIRCLE DETECTOR 6'
		VIDEO CAMERA
		EV INDICATOR LIGHTS
		PED. PUSHBUTTON (1)
		TENON
		PEDESTRIAN SIGNAL HEAD
		TRAFFIC SIGNAL POLE
		VEHICLE SIGNAL HEAD
		VEHICLE SIGNAL HEAD W/ARROW INDICATOR
		OVERHEAD SIGN ASSEMBLY
		TRAFFIC CONTROL SIGN
		STREET NAME SIGN
		SIGNAL CONTROLLER CABINET
		JUNCTION BOX
		JUNCTION BOX (LARGE)
		STREET LIGHT
		YARD LIGHT
		UTIL POLE
		TEL POLE
		UTIL POLE W/LIGHT
		STLIGHT ON FOUNDATIN
		STLIGHT ON WOOD POLE
		ORNAMENTAL POSTTOP
		FLOODLIGHT

MISCELLANEOUS SURFACE SYMBOLS

DESCRIPTION	EXISTING	TO BUILD	REMOVE
ASPHALT			
ASPHALT GRINDING			
CEMENT CONC. SIDEWALK		CEM. CONC. SDWK.	
CEMENT CONC. PAVEMENT			
GRAVEL SURFACING			
ROADWAY PAVEMENT SECTION	SEE EX. CROSS SECTION	SEE PROP. CROSS SECTION (OR AS INDICATED ON LANDSCAPE PLAN)	
TREES / SHRUBS		(VARIES) (VARIES)	

ABBREVIATIONS

&	AND	DET	DETAIL	JT	JOINT	PUD	POWER
@	AT	DF	DRINKING FOUNTAIN			P.V.C.	POLYVINYL CHLORIDE PIPE
Ç, CL	CENTERLINE	DI	DRAIN INLET	LA	LANDSCAPE ARCHITECT		
℄, PL	PROPERTY LINE	DIA	DIAMETER	LF	LINEAR FEET	REM.	REMOVE
%	PERCENT	DIP	DUCTILE IRON PIPE	LP	LIGHT POLE	REPL.	REPLACE
#	NUMBER	DWG	DRAWING	LGT	LIGHT	R	RISER
		DWY	DRIVEWAY	LHT	LIGHTING	RAD	RADIUS
AC	ACRE	E	EAST	LT	LEFT	RIM	RIM ELEVATION
AGGR.	AGGREGATE	EA	EACH			REINF	REINFORCED, REINFORCING
ALT.	ALTERNATE	EJ	EXPANSION JOINT	MAX	MAXIMUM	REQD	REQUIRED
AP	ANGLE POINT	EL	ELEVATION	MB	MAILBOX	R.O.W., R/W	RIGHT OF WAY
APPROX.	APPROXIMATELY	EOP	END OF PROJECT	MED	MEDIUM	RT	RIGHT
ASPH.	ASPHALT	EP	EDGE OF PAVEMENT	MEMB	MEMBRANE		
		EQ	EQUAL	MET	METAL	S	SOUTH
B&B	BALLED AND BUR LAPPED	ER	END OF RADIUS	MFR	MANUFACTURER	SAN	SANITARY SEWER
BOC	BOTTOM OF CURB	EX, EXIST	EXISTING	MH	MANHOLE	S.F.	SQUARE FEET
		EXP	EXPOSED	MIN	MINIMUM	SHT.	SHEET
BOW	BOTTOM OF WALL	FFE	FINISH FLOOR ELEVATION	MISC.	MISCELLANEOUS	SLV.	SLEEVE
BOP	BEGINNING OF PROJECT	FG	FINISHED GRADE	MON	MONUMENT	SPA.	SPACES
BOT	BOTTOM	FH	FIRE HYDRANT			SPECS.	SPECIFICATIONS
BS	BOTTOM OF SLOPE	FIN	FINISH	N	NORTH	SQ.	SQUARE
		FO	FIBEROPTIC	NIC	NOT IN CONTRACT	STA	STATION
C&G	CLEARINIG & GRUBBING	FOC	FACE OF CURB	NO	NUMBER	STL.	STEEL
CB	CATCH BASIN	FT	FOOT OR FEET	NTS	NOT TO SCALE	STM	STORM SEWER
CF	CUBIC FEET	FTG	FOOTING			TEMP	TEMPORARY
CJ	CONTROL JOINT	GA	GAUGE	OC	ON CENTER	TOC	TOP OF CURB
CLR	CLEAR	GAL	GALLON	OD	OUTSIDE DIAMETER	TOW	TOP OF WALL
CMP	CORRUGATED METAL PIPE	GALV	GALVANIZED	OPP	OPPOSITE	T.J.	TOOLED JOINT
CMU	CONCRETE MASONRY UNIT	GRD BRK	GRADE BREAK	P	PARKING	T.S.	TOP OF SLOPE
CONC	CONCRETE	HB	HOSE BIB	PA	PLANTING AREA	T.W.	TOP OF WALL
CONST	CONSTRUCT	H/C, HC	HANDICAP	PAT	PATTERN	TEL	TELEPHONE
CONT	CONTINUOUS	HDR	HEADER	PC	POINT OF CURVATURE	TV	CABLE TELEVISION
COORD	COORDINATE	HORIZ	HORIZONTAL	POB	POINT OF BEGINNING	TS	TRAFFIC SIGNAL CONDUIT
CSTC	CRUSHED SURFACING TOP COURSE	HP	HIGH POINT	POC	POINT OF CONNECTION	TSFO	TRAFFIC SIGNAL CONDUIT FIBEROPTIC
CSBC	CRUSHED SURFACING BASE COURSE	HT	HEIGHT	PS	PIPE SLEEVE	TYP	TYPICAL
CY	CUBIC YARDS	HWY	HIGHWAY	PT	POINT OF TANGENCY	VERT.	VERTICAL
				PVC	POINT OF VERTICAL CURVE	W	WEST, WATER
		ID	INSIDE DIAMETER	PVI	POINT OF VERTICAL INTERSECTION	W/	WITH
		IE	INVERT ELEVATION	PVT	POINT OF VERTICAL TANGENCY	W/O	WITHOUT
		IN	INCHES			WPF.	WATERPROOF
		INT	INTERCONNECT			W.W.M.	WELDED WIRE MESH

TREES

CLASS	DESCRIPTION
	CLASS 0 – TREE UNDER 4" DIAMETER
I	CLASS 1 – 4" TO 12" DIAMETER TREE
II	CLASS 2 – 12" TO 24" DIAMETER TREE
III	CLASS 3 – 24" TO 42" DIAMETER TREE
IV	CLASS 4 – OVER 42" DIAMETER TREE
V	CLASS 5 – OVER 42" DIAMETER TREE, UNDER 30' TALL

BID DOCUMENTS

THESE DRAWINGS ARE NOT TO BE USED FOR CONSTRUCTION UNLESS SIGNED BY THE REVIEWING AGENCY

NOTICE
ALTERATION OF THIS DOCUMENT SHALL INVALIDATE THE PROFESSIONAL SEAL AND SIGNATURE. PUBLICATION OF THIS DOCUMENT DOES NOT DEROGATE FROM RESERVED OWNERSHIP RIGHTS IN IT. THIS DOCUMENT IS FOR USE ONLY FOR THE PROJECT IDENTIFIED IN THE TITLE BLOCK AND IS NOT TO BE USED FOR REPAIR, REMODEL OR ADDITION TO THAT PROJECT OR FOR ANY OTHER PROJECT.

AHBL
TACOMA · SEATTLE
2215 North 30th Street, Suite 300, Tacoma, WA 98403 253.383.2422 TEL
1200 Sixth Avenue, Suite 1620, Seattle, WA 98101 206.267.2425 TEL

Civil Engineers
Structural Engineers
Landscape Architects
Community Planners
Land Surveyors
Neighbors

CALL 48 HOURS BEFORE YOU DIG 1-800-424-5555

CITY OF TACOMA
PUBLIC WORKS DEPT.
ENGINEERING DIVISION
747 MARKET STREET, ROOM 520
TACOMA, WA 98402
(253) 591-5500
FAX: (509) 591-5533

NO	REVISION	DATE	APPD
4			
3			
2			
1			

FINAL CONSTRUCTION CHECKED
BY
DATE
FIELD BOOKS

DATE: OCTOBER 2014
SCALE: AS NOTED
DESIGNED: MS / AB
CHECKED: WJF
DRAWN: FAK
FILE NAME
SYMBOL SHEET

SEAN M. COMPORT, STATE OF WASHINGTON, 29070, REGISTERED PROFESSIONAL ENGINEER, 10/14/2014

CITY OF TACOMA
DEPARTMENT OF PUBLIC WORKS
ENVIRONMENTAL SERVICES SCIENCE AND ENGINEERING

SYMBOL SHEET
ADA PEDESTRIAN IMPROVEMENTS

WORK ORDER NO.
AHBL JOB NO. 211579.10
SHEET NO. SHEET 2 OF 14

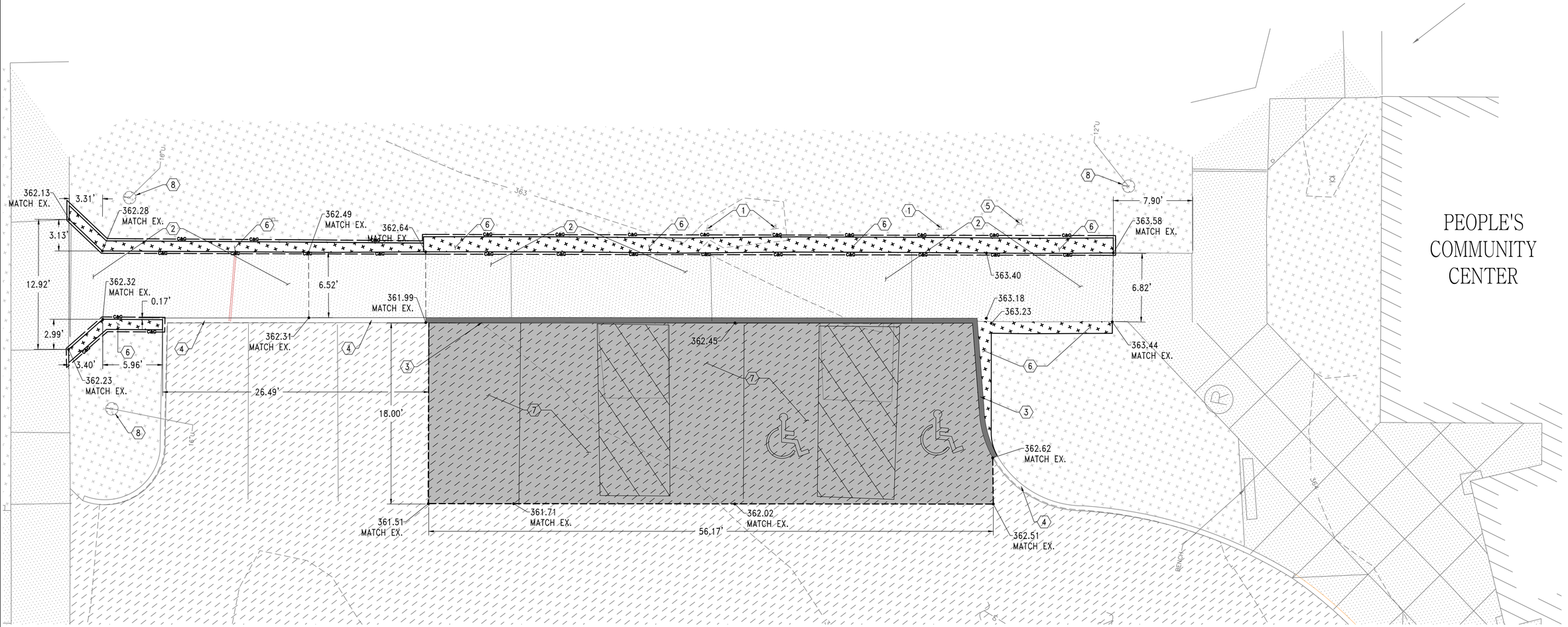

LEGAL DESCRIPTION

A PORTION OF TAX PARCEL 2016220010

LEGEND

SEE SHEET 2 FOR LEGEND.

---------- SAWCUT LINE

KEY NOTES

1. REMOVE ACCESSIBILITY POST AND SIGNAGE.
2. REMOVE PAVEMENT TYPE 1, CLASS C6 TO NEAREST JOINT.
3. REMOVE CURB.
4. PROTECT EXISTING CURB NOT SPECIFICALLY NOTED FOR REMOVAL (TYPICAL)
5. PROTECT EXISTING LIGHTPOLE.
6. CLEAR AND GRUB LANDSCAPE AREA TO PROVIDE PROPOSED IMPROVEMENTS. PROTECT EXISTING IRRIGATION SYSTEM. SEE SHEET 4
7. REMOVE EXISTING PAVEMENT TYPE 1, CLASS A2 AND BASE.
8. PROTECT EXISTING TREE.

NOTES

1. ALL DIMENSIONS ARE TO BE FIELD VERIFIED.
2. PROTECT TREE ROOTS. ONLY HAND DIGGING IS ALLOWED WITHIN 3FT OF DRIPLINES. AFTER DEMOLITION AND ROOTS HAVE BEEN EXPOSED CALL RAMIE PIERCE (PHONE: 253-591-2048) TO SCHEDULE INSPECTION. INSPECTION SHALL BE SCHEDULED A MINIMUM OF 24HRS PRIOR TO CONSTRUCTION OF NEW SIDEWALK.
3. COORDINATE ALL CONSTRUCTION WITH FACILITY STAFF AND/OR ADJACENT BUSINESS.

CONTROL POINTS
CITY OF TACOMA MONUMENT 412 2" BRASS DISK N 703762.49 E 1155650.18
AHBL 101 NAIL AND WASHER N 703717.12 E 1155836.67 EL: 362.37

GRAPHIC SCALE

5 0 2.5 5 10

(IN FEET)
1 inch = 5 ft.

BID DOCUMENTS

THESE DRAWINGS ARE NOT TO BE USED FOR CONSTRUCTION UNLESS SIGNED BY THE REVIEWING AGENCY

NOTICE
ALTERATION OF THIS DOCUMENT SHALL INVALIDATE THE PROFESSIONAL SEAL AND SIGNATURE. PUBLICATION OF THIS DOCUMENT DOES NOT DEDICATE FROM RESERVED OWNERSHIP RIGHTS IN IT. THIS DOCUMENT IS FOR USE ONLY FOR THE PROJECT IDENTIFIED IN THE TITLE BLOCK AND IS NOT TO BE USED FOR REPAIR, REMODEL OR ADDITION TO THAT PROJECT OR FOR ANY OTHER PROJECT.

AHBL
TACOMA · SEATTLE
2215 North 30th Street, Suite 300, Tacoma, WA 98403 253.383.2422 TEL
1200 Sixth Avenue, Suite 1620, Seattle, WA 98101 206.267.2425 TEL
Civil Engineers
Structural Engineers
Landscape Architects
Community Planners
Land Surveyors
Neighbors

CALL 48 HOURS BEFORE YOU DIG 1-800-424-5555

CITY OF TACOMA
PUBLIC WORKS DEPT.
ENGINEERING DIVISION
747 MARKET STREET, ROOM 520
TACOMA, WA 98402
(253) 591-5500
FAX: (509) 591-5533

NO	REVISION	DATE	APPD
4			
3			
2			
1			

FINAL CONSTRUCTION CHECKED
BY
DATE
FIELD BOOKS

DATE: OCTOBER 2014 | SCALE: AS NOTED
DESIGNED: MS / AB | CHECKED: WJF
DRAWN: FAK | FILE NAME:

DEMOLITION PLAN

10/16/2014
SEAN M. COMFORT
STATE OF WASHINGTON
20070
REGISTERED
PROFESSIONAL ENGINEER

CITY OF TACOMA
DEPARTMENT OF PUBLIC WORKS
ENVIRONMENTAL SERVICES SCIENCE AND ENGINEERING

PEOPLES COMMUNITY CENTER
1602 MARTIN LUTHER KING WAY
ADA PEDESTRIAN IMPROVEMENTS

WORK ORDER NO.
AHBL JOB NO. 211579.10
SHEET NO. SHEET 3 OF 14

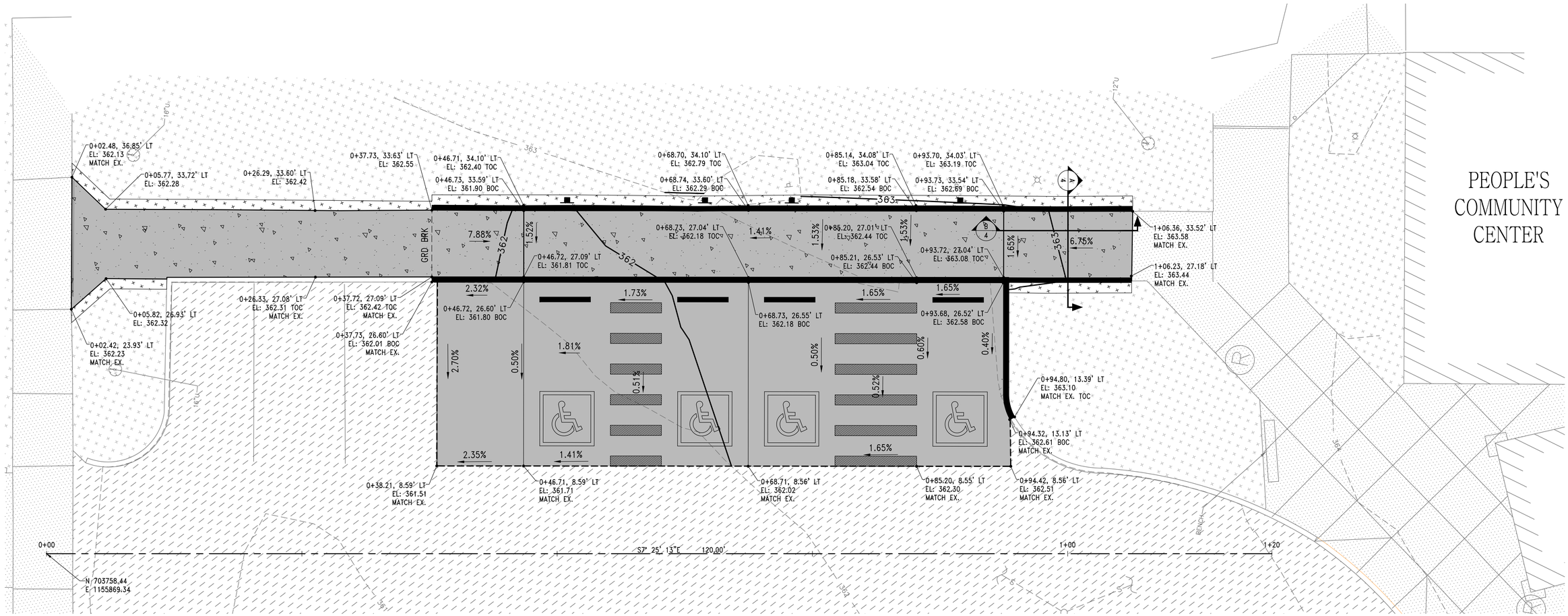

A SIDEWALK AND HADRAIL SECTION

NOT TO SCALE

B SIDEWALK SECTION

NOT TO SCALE

LEGAL DESCRIPTION

A PORTION OF TAX PARCEL 2016220010

LEGEND

SEE SHEET 2 FOR LEGEND.

NOTES

1. ALL DIMENSIONS ARE TO BE FIELD VERIFIED EXCEPT ACCESSIBLE PARKING STALLS. THOSE SHALL BE DONE AS MARKED, TO ADA STANDARD.
2. ALL STRIPING SHALL BE PLASTIC PER SPEC.
3. COORDINATE ALL CONSTRUCTION WITH FACILITY STAFF AND/OR ADJACENT BUSINESS.

CONTROL POINTS
CITY OF TACOMA MONUMENT 412 2" BRASS DISK N 703762.49 E 1155650.18
AHBL 101 NAIL AND WASHER N 703717.12 E 1155836.67 EL: 362.37

GRAPHIC SCALE

5 0 2.5 5 10

(IN FEET)
1 inch = 5 ft.

BID DOCUMENTS

THESE DRAWINGS ARE NOT TO BE USED FOR CONSTRUCTION UNLESS SIGNED BY THE REVIEWING AGENCY

NOTICE
ALTERATION OF THIS DOCUMENT SHALL INVALIDATE THE PROFESSIONAL SEAL AND SIGNATURE. PUBLICATION OF THIS DOCUMENT DOES NOT DEROGATE FROM RESERVED OWNERSHIP RIGHTS IN IT. THIS DOCUMENT IS FOR USE ONLY FOR THE PROJECT IDENTIFIED IN THE TITLE BLOCK AND IS NOT TO BE USED FOR REPAIR, REMODEL OR ADDITION TO THAT PROJECT OR FOR ANY OTHER PROJECT.

AHBL
TACOMA · SEATTLE
2215 North 30th Street, Suite 300, Tacoma, WA 98403 253.383.2422 TEL
1200 Sixth Avenue, Suite 1620, Seattle, WA 98101 206.267.2425 TEL
Civil Engineers
Structural Engineers
Landscape Architects
Community Planners
Land Surveyors
Neighbors

CALL 48 HOURS
BEFORE YOU DIG
1-800-424-5555

CITY OF TACOMA
PUBLIC WORKS DEPT.
ENGINEERING DIVISION
747 MARKET STREET, ROOM 520
TACOMA, WA 98402
(253) 591-5500
FAX: (509) 591-5533

NO	REVISION	DATE	APPD
4			
3			
2			
1			

FINAL CONSTRUCTION CHECKED
BY
DATE
FIELD BOOKS

DATE: OCTOBER 2014 | SCALE: AS NOTED
DESIGNED: MS / AB | CHECKED: WJF
DRAWN: FAK | FILE NAME:
DEVELOPED PLAN

10/14/2014
SEAN M. COMBER
STATE OF WASHINGTON
21076
REGISTERED
PROFESSIONAL ENGINEER

CITY OF TACOMA
DEPARTMENT OF PUBLIC WORKS
ENVIRONMENTAL SERVICES SCIENCE AND ENGINEERING

PEOPLES COMMUNITY CENTER
1602 MARTIN LUTHER KING WAY
ADA PEDESTRIAN IMPROVEMENTS

WORK ORDER NO.
AHBL JOB NO. 211579.10
SHEET NO. SHEET 4 OF 14

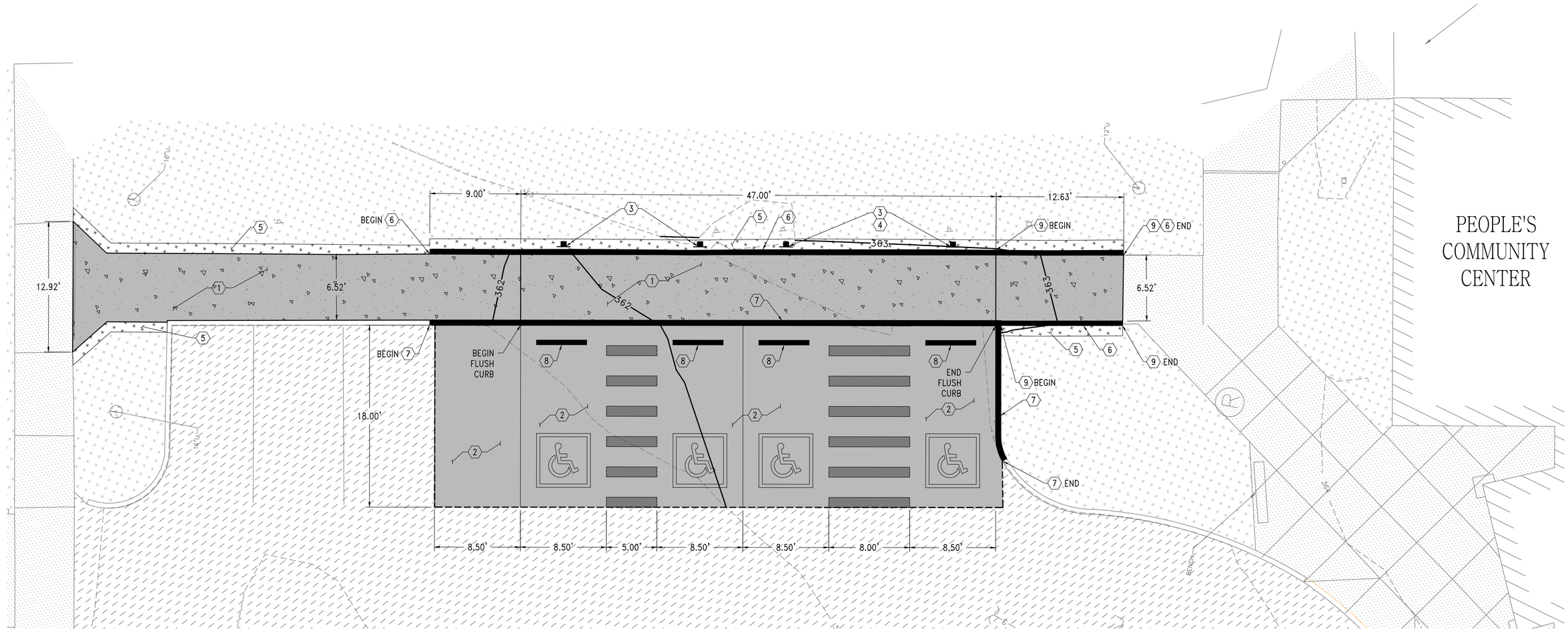

LEGAL DESCRIPTION

A PORTION OF TAX PARCEL 2016220010

LEGEND

SEE SHEET 2 FOR LEGEND.

NOTES

1. ALL DIMENSIONS ARE TO BE FIELD VERIFIED EXCEPT ACCESSIBLE PARKING STALLS. THOSE SHALL BE DONE AS MARKED, TO ADA STANDARD.
2. ALL STRIPING SHALL BE THERMOPLASTIC PER SPECIFICATIONS, UNLESS NOTED OTHERWISE.
3. COORDINATE ALL CONSTRUCTION WITH FACILITY STAFF AND/OR ADJACENT BUSINESS.

KEY NOTES

1. PROVIDE CEMENT CONCRETE SIDEWALK PER CITY OF TACOMA STANDARD PLAN SU-04. MATCH EXISTING GRADES. PROVIDE EXPANSION JOINT BETWEEN EXISTING AND NEW SIDEWALK.
2. CONSTRUCT NEW ASPHALT PAVEMENT SECTION. 2" HMA CL. ½" PG 64-22 OVER 4" CRUSHED SURFACING TOP COURSE.
3. PROVIDE ACCESSIBILITY SIGNS PER DETAILS 1/14 AND 2/14 .
4. PROVIDE VAN ACCESSIBLE SIGN PER DETAIL 2/14 .
5. PROVIDE 6" TOPSOIL TYPE A AND SOD.
6. PROVIDE CEMENT CONCRETE PEDESTRIAN CURB PER WSDOT STANDARD PLAN F-10.12-02.
7. PROVIDE CEMENT CONCRETE TRAFFIC CURB PER CITY OF TACOMA STANDARD PLAN NO. SU-03 FOR 'CEMENT CONCRETE TRAFFIC CURB'.
8. PROVIDE WHEEL STOP PER DETAIL 4/14 .
9. PROVIDE RAMP HANDRAIL ON PEDESTRIAN CURB PER WSDOT STANDARD PLAN F-10.12-02 AND PER DETAIL 5/13 TYP.

CONTROL POINTS
CITY OF TACOMA MONUMENT 412 2" BRASS DISK N 703762.49 E 1155650.18
AHBL 101 NAIL AND WASHER N 703717.12 E 1155836.67 EL: 362.37

GRAPHIC SCALE

5 0 2.5 5 10

(IN FEET)
1 inch = 5 ft.

THESE DRAWINGS ARE NOT TO BE USED FOR CONSTRUCTION UNLESS SIGNED BY THE REVIEWING AGENCY

BID DOCUMENTS

NOTICE
ALTERATION OF THIS DOCUMENT SHALL INVALIDATE THE PROFESSIONAL SEAL AND SIGNATURE. PUBLICATION OF THIS DOCUMENT IN PARTIAL FORM IS NOT AUTHORIZED UNLESS INDICATED. IT IS NOT INTENDED OR REPRESENTED TO BE SUITABLE FOR REUSE ON ANY OTHER PROJECT OR EXTENSION TO THIS PROJECT OR ON ANY OTHER SITE. REUSE WITHOUT WRITTEN VERIFICATION OR ADAPTATION BY AHBL FOR THE SPECIFIC PURPOSE INTENDED WILL BE AT USER'S SOLE RISK AND WITHOUT LIABILITY OR LEGAL EXPOSURE TO AHBL. ANY SUCH VERIFICATION OR ADAPTATION WILL ENTITLE AHBL TO FURTHER COMPENSATION AT RATES TO BE AGREED UPON BY USER AND AHBL. USE OF THIS DRAWING IS FOR THE PROJECT IDENTIFIED IN THE TITLE BLOCK AND IS NOT TO BE USED FOR REPAIR, REMODEL OR ADDITION TO THAT PROJECT OR FOR ANY OTHER PROJECT.

AHBL
TACOMA · SEATTLE
2215 North 30th Street, Suite 300, Tacoma, WA 98403 253.383.2422 TEL
1200 Sixth Avenue, Suite 1620, Seattle, WA 98101 206.267.2425 TEL
Civil Engineers
Structural Engineers
Landscape Architects
Community Planners
Land Surveyors
Neighbors

CALL 48 HOURS
BEFORE YOU DIG
1-800-424-5555

CITY OF TACOMA
PUBLIC WORKS DEPT.
ENGINEERING DIVISION
747 MARKET STREET, ROOM 520
TACOMA, WA 98402
(253) 591-5500
FAX: (509) 591-5533

NO	REVISION	DATE	APPD
4			
3			
2			
1			

FINAL CONSTRUCTION CHECKED
BY
DATE
FIELD BOOKS

DATE: OCTOBER 2014 | SCALE: AS NOTED
DESIGNED: MS / AB | CHECKED: WJF
DRAWN: FAK | FILE NAME:

STRIPING PLAN

SEAN M. COMSTOCK — STATE OF WASHINGTON — 29010 — REGISTERED PROFESSIONAL ENGINEER

CITY OF TACOMA
DEPARTMENT OF PUBLIC WORKS
ENVIRONMENTAL SERVICES SCIENCE AND ENGINEERING

PEOPLES COMMUNITY CENTER
1602 MARTIN LUTHER KING WAY
ADA PEDESTRIAN IMPROVEMENTS

WORK ORDER NO.
AHBL JOB NO. 211579.10
SHEET NO. 5 OF 14

PANTAGES THEATER

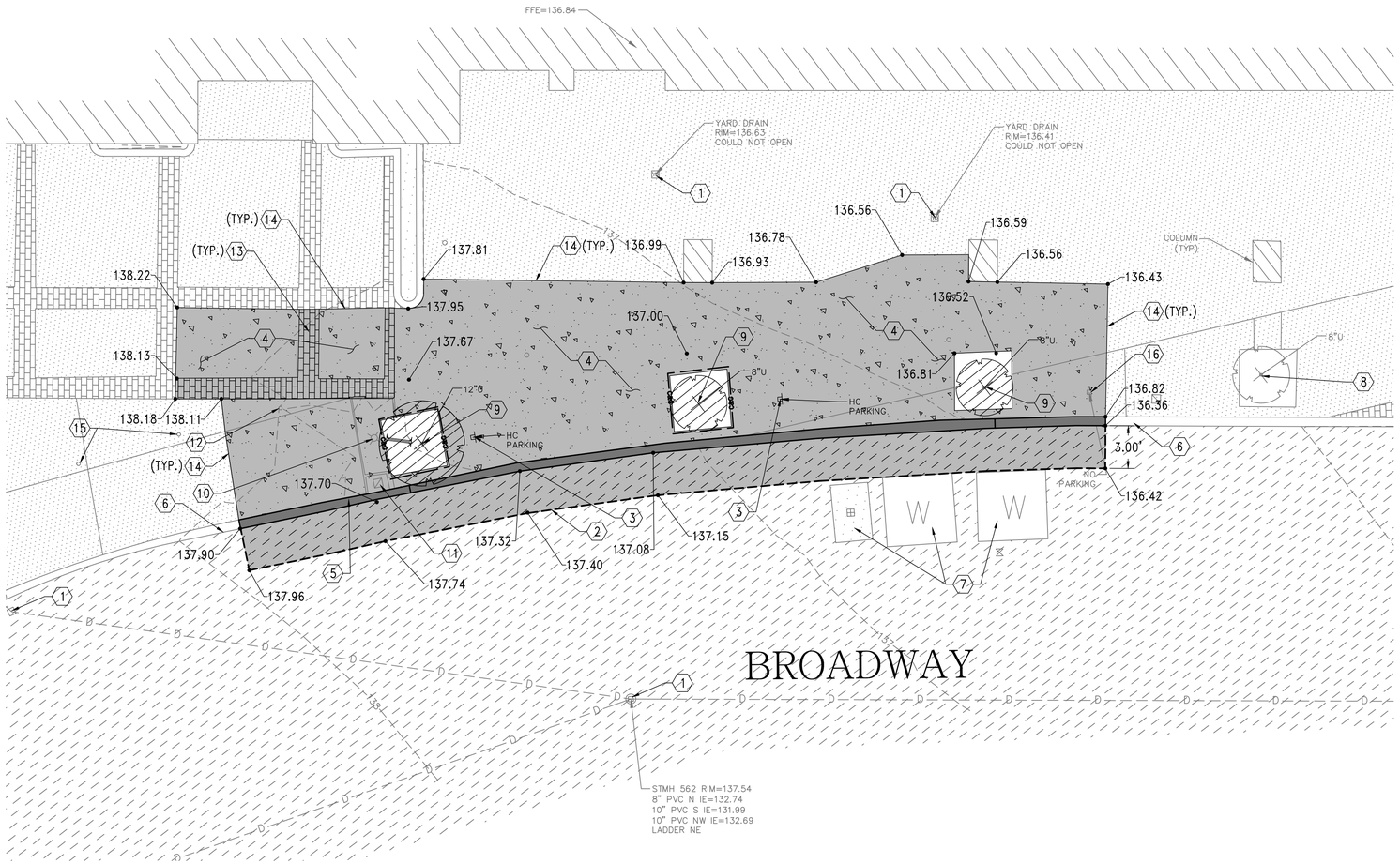

LEGAL DESCRIPTION

A PORTION OF TAX PARCEL 2009050010

LEGEND

SEE SHEET 2 FOR LEGEND.

-------- SAWCUT LINE

KEY NOTES

1. PROVIDE INLET PROTECTION PER DETAIL 1/13
2. NEAT LINE SAWCUT. REMOVE EXISTING PAVEMENT TYPE 1, CLASS A4 AND BASE. SUITABLE BASE TO REMAIN.
3. REMOVE ACCESSIBILITY POST AND SIGNAGE.
4. REMOVE EXISTING PAVEMENT TYPE 1, CLASS C6 PER PLAN TO NEAREST JOINT.
5. REMOVE CURB AND GUTTER.
6. PROTECT EXISTING CURB NOT SPECIFICALLY NOTED FOR REMOVAL (TYPICAL)
7. PROTECT VAULT.
8. PROTECT TREE.
9. CLEAR AND GRUB LANDSCAPE AREA TO PROVIDE PROPOSED IMPROVEMENTS. REMOVE TREE AND GRIND STUMP.
10. REMOVE AND RESET LIGHT POLE TO NEW GRADE.
11. REPLACE/ADJUST JUNCTION BOX.
12. REMOVE AND SALVAGE EXISTING BOLLARD.
13. PROTECT AND SALVAGE REMOVED BRICK. USE REMOVED BRICK TO REPAIR ANY BRICKS TO REMAIN DAMAGED DURING CONSTRUCTION. PROVIDE UNDAMAGED, UNUSED BRICK TO CITY. DAMAGED BRICK SHALL BE REPAIRED AT NO COST TO THE CITY.
14. SAWCUT EXISTING PAVEMENT AT NEAREST JOINT.
15. PROTECT EXISTING BOLLARD.
16. REMOVE AND SALVAGE EXISTING SIGN AND POST.

NOTES

1. ALL DIMENSIONS ARE TO BE FIELD VERIFIED. SEE SHEET 8 FOR DIMENSIONS.
2. PROTECT TREE ROOTS. ONLY HAND DIGGING IS ALLOWED WITHIN 3FT OF DRIPLINES. AFTER DEMOLITION AND ROOTS HAVE BEEN EXPOSED CALL RAMIE PIERCE (PHONE: 253-591-2048) TO SCHEDULE INSPECTION. INSPECTION SHALL BE SCHEDULED A MINIMUM OF 24HRS PRIOR TO CONSTRUCTION OF NEW SIDEWALK.
3. COORDINATE ALL CONSTRUCTION WITH FACILITY STAFF AND/OR ADJACENT BUSINESS.

CONTROL POINTS
AHBL 100 SCRIBED "X" N 706778.60 E 1158540.18 EL: 143.42
AHBL 101 NAIL AND WASHER N 706621.11 E 1158554.93 EL: 138.47

GRAPHIC SCALE

5 0 2.5 5 10

(IN FEET)
1 inch = 5 ft.

BID DOCUMENTS

THESE DRAWINGS ARE NOT TO BE USED FOR CONSTRUCTION UNLESS SIGNED BY THE REVIEWING AGENCY

NOTICE
ALTERATION OF THIS DOCUMENT SHALL INVALIDATE THE PROFESSIONAL SEAL AND SIGNATURE. PUBLICATION OF THIS DOCUMENT DOES NOT DEROGATE FROM RESERVED OWNERSHIP RIGHTS IN IT. THIS DOCUMENT IS FOR USE ONLY FOR THE PROJECT IDENTIFIED IN THE TITLE BLOCK AND IS NOT TO BE USED FOR REPAIR, REMODEL OR ADDITION TO THAT PROJECT OR FOR ANY OTHER PROJECT.

AHBL
TACOMA · SEATTLE
2215 North 30th Street, Suite 300, Tacoma, WA 98403 253.383.2422 TEL
1200 Sixth Avenue, Suite 1620, Seattle, WA 98101 206.267.2425 TEL
Civil Engineers
Structural Engineers
Landscape Architects
Community Planners
Land Surveyors
Neighbors

CALL 48 HOURS BEFORE YOU DIG 1-800-424-5555

CITY OF TACOMA
PUBLIC WORKS DEPT.
ENGINEERING DIVISION
747 MARKET STREET, ROOM 520
TACOMA, WA 98402
(253) 591-5500
FAX: (509) 591-5533

NO	REVISION	DATE	APPD
4			
3			
2			
1			

FINAL CONSTRUCTION CHECKED
BY
DATE
FIELD BOOKS

DATE: OCTOBER 2014 | SCALE: AS NOTED
DESIGNED: MS / AB | CHECKED: WJF
DRAWN: FAK | FILE NAME:

DEMOLITION PLAN

10/14/2014
SEAN W. COMFORT
STATE OF WASHINGTON
21610
REGISTERED
PROFESSIONAL ENGINEER

CITY OF TACOMA
DEPARTMENT OF PUBLIC WORKS
ENVIRONMENTAL SERVICES SCIENCE AND ENGINEERING

PANTAGES THEATER
901 BROADWAY
ADA PEDESTRIAN IMPROVEMENTS

WORK ORDER NO.
AHBL JOB NO. 211579.10
SHEET NO. SHEET 6 OF 14

PANTAGES THEATER

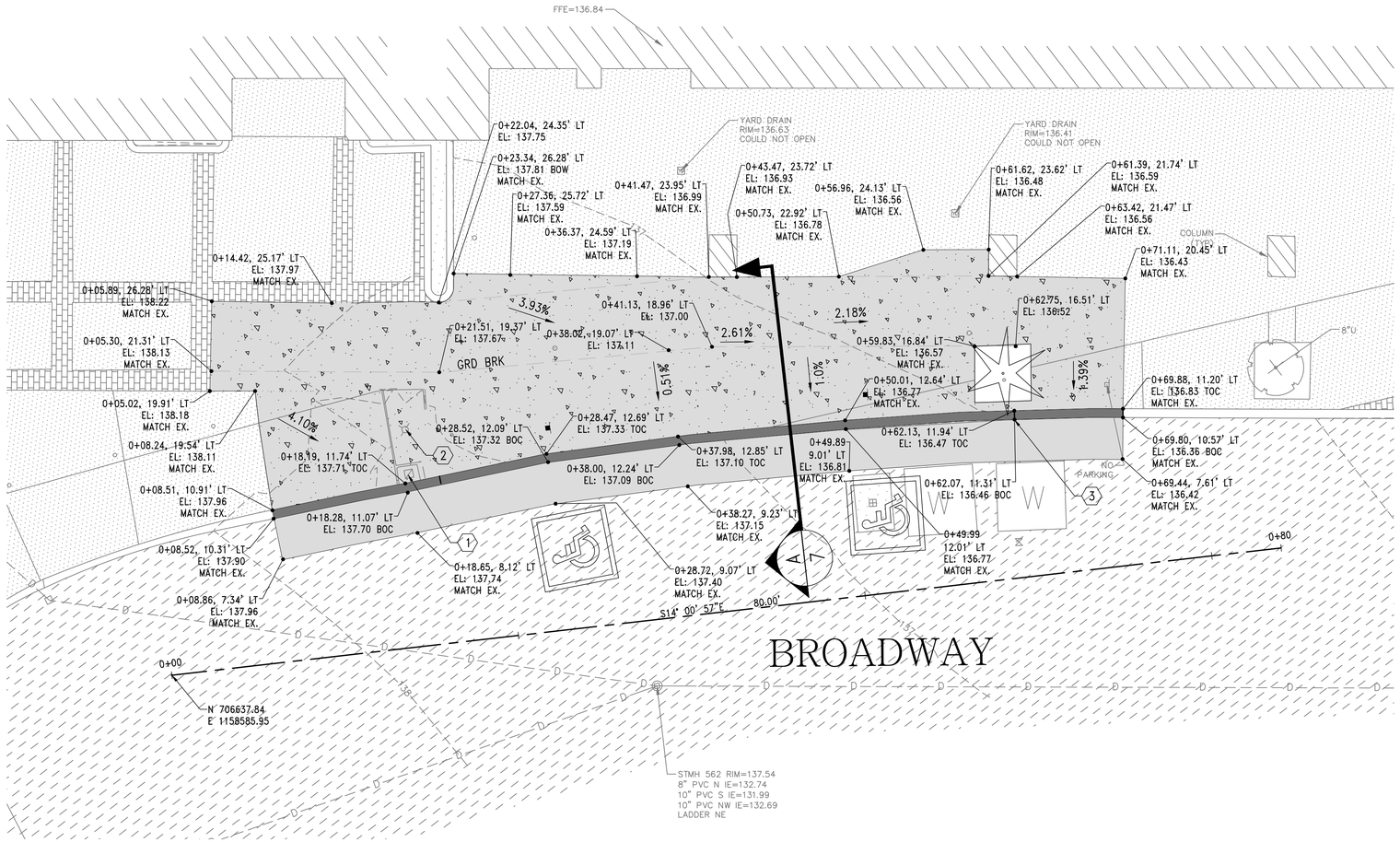

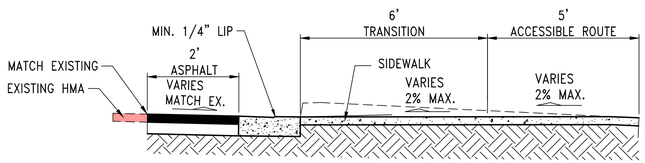

A **PAVING SECTION**
NOT TO SCALE

LEGAL DESCRIPTION

A PORTION OF TAX PARCEL 2009050010

LEGEND

SEE SHEET 2 FOR LEGEND.

NOTES

COORDINATE ALL CONSTRUCTION WITH FACILITY STAFF AND/OR ADJACENT BUSINESS.

KEY NOTES

1. REPLACE/ADJUST JUNCTION BOX.
2. ADJUST LIGHT POLE TO FINISHED GRADE.
3. CURB SHALL TAPER AT 12:1 SLOPE TOWARDS ACCESSIBILITY STALL.

CONTROL POINTS
AHBL 100 SCRIBED "X" N 706778.60 E 1158540.18 EL: 143.42
AHBL 101 NAIL AND WASHER N 706621.11 E 1158554.93 EL: 138.47

GRAPHIC SCALE

5 0 2.5 5 10

(IN FEET)
1 inch = 5 ft.

BID DOCUMENTS

THESE DRAWINGS ARE NOT TO BE USED FOR CONSTRUCTION UNLESS SIGNED BY THE REVIEWING AGENCY

NOTICE
ALTERATION OF THIS DOCUMENT SHALL INVALIDATE THE PROFESSIONAL SEAL AND SIGNATURE. PUBLICATION OF THIS DOCUMENT DOES NOT DEROGATE FROM RESERVED COMMON LAW COPYRIGHT OR OTHER PROPERTY RIGHTS. USE ONLY FOR THE PROJECT IDENTIFIED IN THE TITLE BLOCK AND IS NOT TO BE USED FOR REPAIR, REMODEL OR ADDITION TO THAT PROJECT OR FOR ANY OTHER PROJECT.

AHBL
TACOMA · SEATTLE
2215 North 30th Street, Suite 300, Tacoma, WA 98403 253.383.2422 TEL
1200 Sixth Avenue, Suite 1620, Seattle, WA 98101 206.267.2425 TEL
Civil Engineers
Structural Engineers
Landscape Architects
Community Planners
Land Surveyors
Neighbors

CALL 48 HOURS BEFORE YOU DIG 1-800-424-5555

CITY OF TACOMA
PUBLIC WORKS DEPT.
ENGINEERING DIVISION
747 MARKET STREET, ROOM 520
TACOMA, WA 98402
(253) 591-5500
FAX: (509) 591-5533

NO	REVISION	DATE	APPD
4			
3			
2			
1			

FINAL CONSTRUCTION CHECKED
BY
DATE
FIELD BOOKS

DATE: OCTOBER 2014 | SCALE: AS NOTED
DESIGNED: MS / AB | CHECKED: WJF
DRAWN: FAK | FILE NAME:

DEVELOPED PLAN

10/16/2014
SEAN M. COMPOSER
STATE OF WASHINGTON
20010
REGISTERED
PROFESSIONAL ENGINEER

CITY OF TACOMA
DEPARTMENT OF PUBLIC WORKS
ENVIRONMENTAL SERVICES SCIENCE AND ENGINEERING

PANTAGES THEATER
901 BROADWAY
ADA PEDESTRIAN IMPROVEMENTS

WORK ORDER NO.
AHBL JOB NO. 211579.10
SHEET NO. SHEET 7 OF 14

PANTAGES THEATER

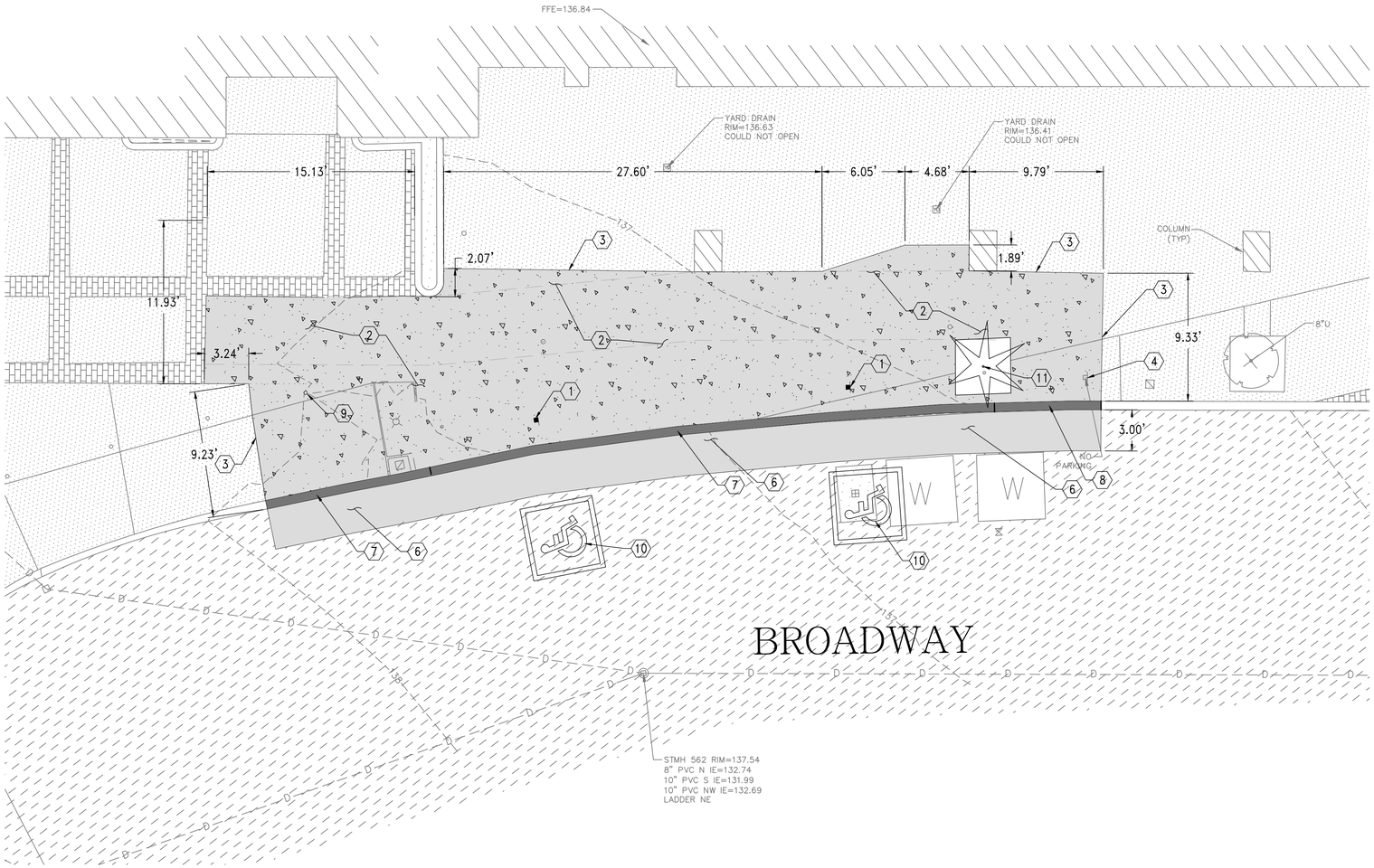

LEGAL DESCRIPTION

A PORTION OF TAX PARCEL 2009050010

LEGEND

SEE SHEET 2 FOR LEGEND.

NOTES

1. COORDINATE ALL CONSTRUCTION WITH FACILITY STAFF AND/OR ADJACENT BUSINESS.
2. ALL STRIPING SHALL BE THERMOPLASTIC PER SPECIFICATIONS, UNLESS NOTED OTHERWISE.

KEY NOTES

1. PROVIDE ACCESSIBILITY SIGNAGE PER DETAIL 2/14.
2. PROVIDE NEW CEMENT CONCRETE SIDEWALK PER CITY OF TACOMA STANDARD PLAN SU-04.
3. PROVIDE NEW SIDEWALK FLUSH WITH EXISTING SIDEWALK. PROVIDE EXPANSION JOINTS BETWEEN NEW AND EXISTING PANELS.
4. REINSTALL SALVAGED SIGN.
5. NOT USED.
6. PROVIDE NEW ASPHALT IN PARKING AREA. 3" HMA CL. 1/2", PG 64-22 OVER 6" CRUSHED SURFACING TOP COURSE.
7. PROVIDE 0" HEIGHT CEMENT CONCRETE TRAFFIC CURB AND GUTTER PER CITY OF TACOMA STANDARD PLAN NO. SU-03 FOR 'CEMENT CONCRETE TRAFFIC CURB'.
8. PROVIDE CEMENT CONCRETE TRAFFIC CURB AND GUTTER PER CITY OF TACOMA STANDARD PLAN SU-03.
9. REINSTALL SALVAGED BOLLARD WITHIN NEW CONCRETE PAVEMENT. PROVIDE NEW SLEEVE WITH LOCKING MECHANISM SIMILAR TO EXISTING SLEEVE.
10. PROVIDE PLASTIC ACCESS PARKING SPACE SYMBOL PER WSDOT STANDARD PLAN M-24.60-03.
11. PLANT SELECTION INCLUDING PLANT ESTABLISHMENT, ULMUS CARPINIFOLIA x PARVIFOLIA 'FRONTIER' (FRONTIER ELM), OR ZELKOVA SERRATA 'GREEN VASE' (JAPANESE ZELKOVA).

CONTROL POINTS
AHBL 100 SCRIBED "X" N 706778.60 E 1158540.18 EL: 143.42
AHBL 101 NAIL AND WASHER N 706621.11 E 1158554.93 EL: 138.47

GRAPHIC SCALE

5 0 2.5 5 10

(IN FEET)
1 inch = 5 ft.

THESE DRAWINGS ARE NOT TO BE USED FOR CONSTRUCTION UNLESS SIGNED BY THE REVIEWING AGENCY

NOTICE
ALTERATION OF THIS DOCUMENT SHALL INVALIDATE THE PROFESSIONAL SEAL AND SIGNATURE. PUBLICATION OF THIS DOCUMENT DOES NOT DEROGATE FROM RESERVED OWNERSHIP RIGHTS IN IT. THIS DOCUMENT IS FOR USE ONLY FOR THE PROJECT IDENTIFIED IN THE TITLE BLOCK AND IS NOT TO BE USED FOR REPAIR, REMODEL OR ADDITION TO THAT PROJECT OR FOR ANY OTHER PROJECT.

BID DOCUMENTS

AHBL
TACOMA · SEATTLE
2215 North 30th Street, Suite 300, Tacoma, WA 98403 253.383.2422 TEL
1200 Sixth Avenue, Suite 1620, Seattle, WA 98101 206.267.2425 TEL
Civil Engineers
Structural Engineers
Landscape Architects
Community Planners
Land Surveyors
Neighbors

CALL 48 HOURS BEFORE YOU DIG 1-800-424-5555

CITY OF TACOMA
PUBLIC WORKS DEPT.
ENGINEERING DIVISION
747 MARKET STREET, ROOM 520
TACOMA, WA 98402
(253) 591-5500
FAX: (509) 591-5533

NO	REVISION	DATE	APPD
4			
3			
2			
1			

FINAL CONSTRUCTION CHECKED
BY
DATE
FIELD BOOKS

DATE	SCALE
OCTOBER 2014	AS NOTED
DESIGNED MS / AB	CHECKED WJF
DRAWN FAK	FILE NAME

STRIPING PLAN

10/16/2014 SEAN M. COMFORT STATE OF WASHINGTON 29010 REGISTERED PROFESSIONAL ENGINEER

CITY OF TACOMA
DEPARTMENT OF PUBLIC WORKS

ENVIRONMENTAL SERVICES SCIENCE AND ENGINEERING

PANTAGES THEATER
901 BROADWAY
ADA PEDESTRIAN IMPROVEMENTS

WORK ORDER NO.
AHBL JOB NO. 211579.10
SHEET NO.
SHEET 8 OF 14

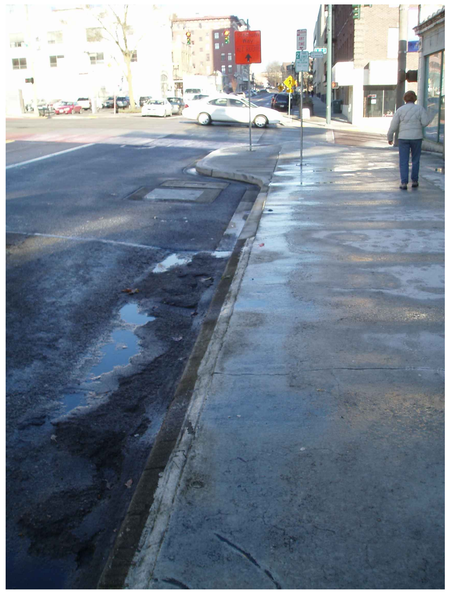

EXISTING PHOTO #1

EXISTING PHOTO #2

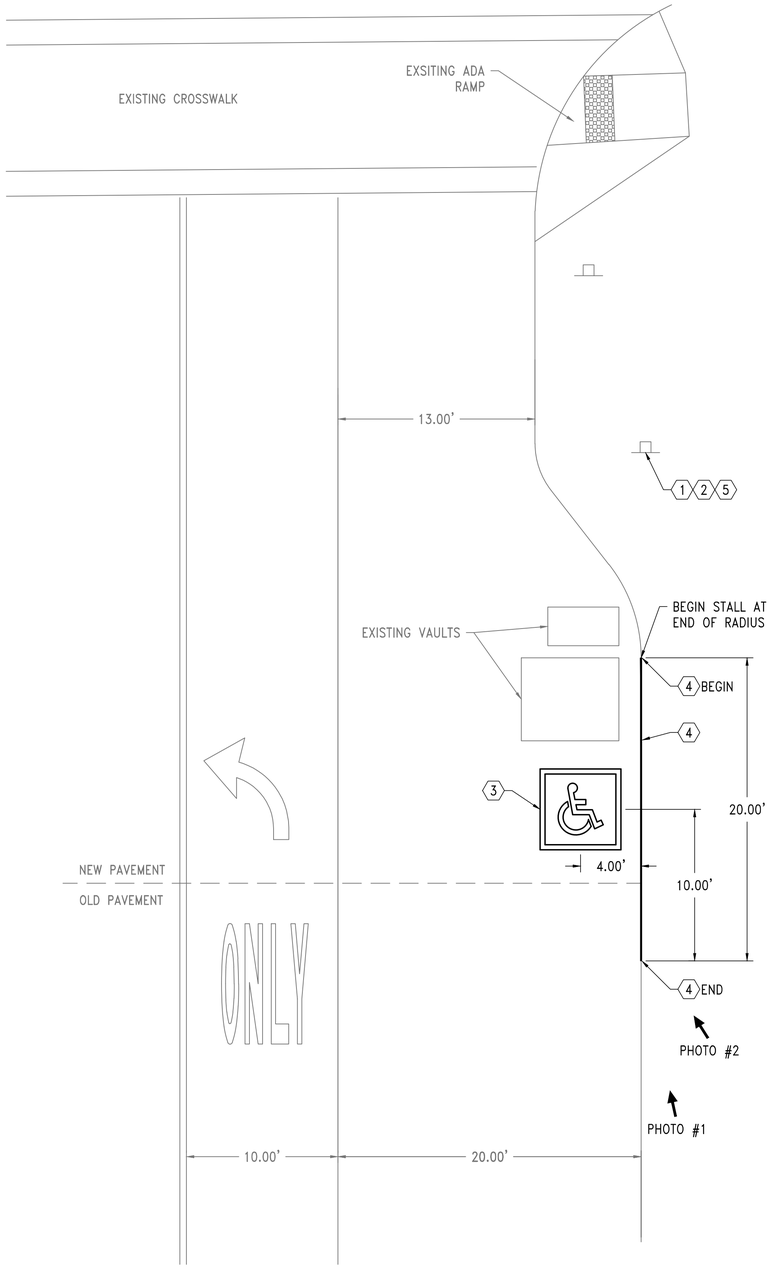

LEGAL DESCRIPTION

A PORTION OF TAX PARCEL 2009070010

LEGEND

SEE SHEET 2 FOR LEGEND.

NOTES

1. SUBJECT TO PROWAC GUIDELINES. RUNNING SLOPE MAY MATCH ROADWAY SLOPE.
2. INTENDED ACCESSIBLE ROUTE TO EXIT VEHICLE IS THE EXISTING CURB OR ALONG ROAD TO CROSSWALK.
3. EXISTING SIDEWALK IS STRUCTURAL. REPLACMENT WITH FLUSH CURB IS NOT PRACTICAL.
4. COORDINATE ALL CONSTRUCTION WITH FACILITY STAFF AND/OR ADJACENT BUSINESS.
5. ALL STRIPING SHALL BE THERMOPLASTIC PER SPECIFICATIONS, UNLESS NOTED OTHERWISE.

KEY NOTES

1. PROVIDE ACCESSIBILITY SIGNAGE PER DETAIL 2/14.
2. INSTALL SIGN ON EXISTING POST PER DETAIL 1/14.
3. PROVIDE PLASTIC ACCESS PARKING SPACE SYMBOL PER WSDOT STANDARD PLAN M-24.60-03.
4. PAINT CURB WHITE.
5. REMOVE EXISTING SIGNS. POST TO REMAIN.

GRAPHIC SCALE

5 0 2.5 5 10

(IN FEET)
1 inch = 5 ft.

THESE DRAWINGS ARE NOT TO BE USED FOR CONSTRUCTION UNLESS SIGNED BY THE REVIEWING AGENCY

NOTICE
ALTERATION OF THIS DOCUMENT SHALL INVALIDATE THE PROFESSIONAL SEAL AND SIGNATURE. PUBLICATION OF THIS DOCUMENT DOES NOT DEROGATE FROM RESERVED OWNERSHIP RIGHTS IN IT. THIS DOCUMENT IS FOR USE ONLY FOR THE PROJECT IDENTIFIED IN THE TITLE BLOCK AND IS NOT TO BE USED FOR REPAIR, REMODEL OR ADDITION TO THAT PROJECT OR FOR ANY OTHER PROJECT.

BID DOCUMENTS

AHBL
TACOMA · SEATTLE
2215 North 30th Street, Suite 300, Tacoma, WA 98403 253.383.2422 TEL
1200 Sixth Avenue, Suite 1620, Seattle, WA 98101 206.267.2425 TEL
Civil Engineers
Structural Engineers
Landscape Architects
Community Planners
Land Surveyors
Neighbors

CALL 48 HOURS BEFORE YOU DIG 1-800-424-5555

CITY OF TACOMA
PUBLIC WORKS DEPT.
ENGINEERING DIVISION
747 MARKET STREET, ROOM 520
TACOMA, WA 98402
(253) 591-5500
FAX: (509) 591-5533

NO	REVISION	DATE	APPD
4			
3			
2			
1			

FINAL CONSTRUCTION CHECKED
BY
DATE
FIELD BOOKS

DATE OCTOBER 2014	SCALE AS NOTED
DESIGNED MS / AB	CHECKED WJF
DRAWN FAK	FILE NAME

DEVELOPED PLAN

10/16/2014 SEAN M. COMFORT STATE OF WASHINGTON 29010 REGISTERED PROFESSIONAL ENGINEER

CITY OF TACOMA
DEPARTMENT OF PUBLIC WORKS

ENVIRONMENTAL SERVICES SCIENCE AND ENGINEERING

RIALTO THEATER
901 MARKET STREET
ADA PEDESTRIAN IMPROVEMENTS

WORK ORDER NO.
AHBL JOB NO. 211579.10
SHEET NO.
SHEET 9 OF 14

SWASEY BRANCH LIBRARY

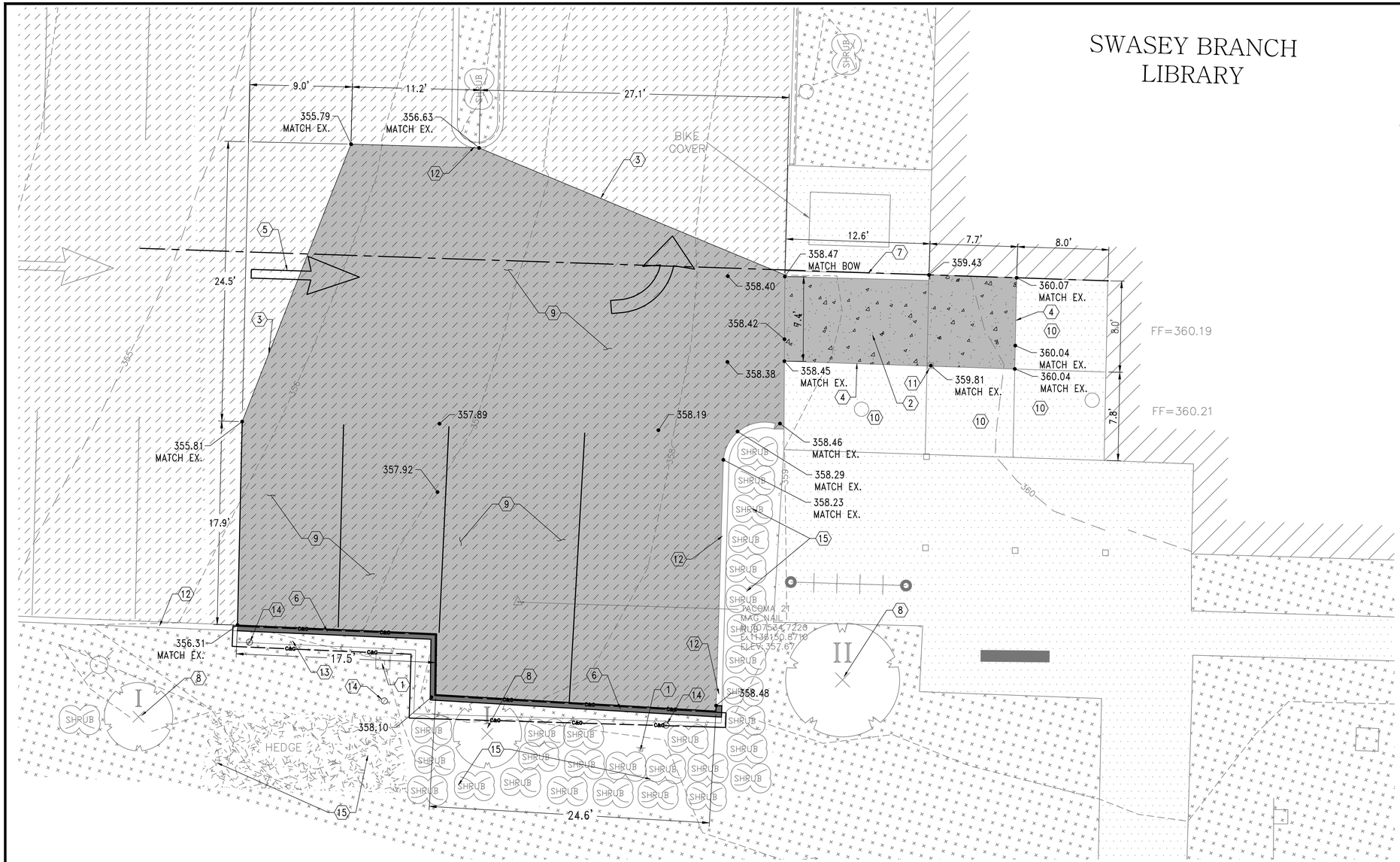

LEGAL DESCRIPTION

A PORTION OF TAX PARCEL 4470000080

LEGEND

SEE SHEET 2 FOR LEGEND.

--------- SAWCUT LINE

KEY NOTES

1. REMOVE ADA POST AND SIGNAGE.
2. REMOVE PAVEMENT TYPE 1, CLASS C6 AND BASE.
3. NEAT LINE SAWCUT AND REMOVE PAVEMENT TYPE 1, CLASS A2 AND BASE. SUITABLE BASE TO REMAIN.
4. REMOVE CONCRETE AND BASE TO JOINT.
5. GRIND ALL PAINT FROM TRAFFIC ARROW OUTSIDE OF LIMIT OF ASPAHLT REMOVAL.
6. REMOVE EXISTING EXTRUDED CURB.
7. PROTECT EXISTING WALL AND REMOVE RAILING. PATCH HOLES REMAINING WITH GROUT.
8. PROTECT EXISTING TREE. SEE NOTE 3.
9. REMOVE EXISTING ASPHALT AND BASE. SUITABLE BASE TO REMAIN
10. PROTECT CONCRETE.
11. PROTECT EXISTING COLUMN.
12. PROTECT EXISTING CURB.
13. CLEAR AND GRUB LANDSCAPE AREA TO PROVIDE PROPOSED IMPROVEMENTS.
14. PROTECT EXISTING IRRIGATION SYSTEM. SEE SHEET 11.
15. PROTECT EXISTING SHRUBS AND HEDGES. TRIM SHRUBS AND HEDGES IF NECESSARY TO PROVIDE PROPOSED IMPROVEMENTS.

NOTES

1. GRINDING IS TO REMOVE PAINT LINES ONLY. ONCE PAINT LINES ARE REMOVED PREPARE AREA FOR ASPHALT EMULSION SEALANT ACCORDING TO SPECS.
2. ALL DIMENSIONS ARE TO BE FIELD VERIFIED.
3. PROTECT TREE ROOTS. ONLY HAND DIGGING IS ALLOWED WITHIN 3FT OF DRIPLINES. AFTER DEMOLITION AND ROOTS HAVE BEEN EXPOSED CALL RAMIE PIERCE (PHONE: 253-591-2048) TO SCHEDULE INSPECTION. INSPECTION SHALL BE SCHEDULED A MINIMUM OF 24HRS PRIOR TO CONSTRUCTION OF NEW SIDEWALK.
4. COORDINATE ALL CONSTRUCTION WITH FACILITY STAFF AND/OR ADJACENT BUSINESS.

CONTROL POINTS
TACOMA 20 N 707508.79 E 1135993.95 EL: 352.78
TACOMA 21 MAG NAIL N 707534.72 E 1136150.87 EL: 357.67

CIVIL & STRUCTURAL ENGINEERS
AHBL
LAND PLANNERS

GRAPHIC SCALE

5 0 2.5 5 10

(IN FEET)
1 inch = 5 ft.

THESE DRAWINGS ARE NOT TO BE USED FOR CONSTRUCTION UNLESS SIGNED BY THE REVIEWING AGENCY

BID DOCUMENTS

NOTICE
ALTERATION OF THIS DOCUMENT SHALL INVALIDATE THE PROFESSIONAL SEAL AND SIGNATURE. PUBLICATION OF THIS DOCUMENT DOES NOT DEROGATE FROM RESERVED OWNERSHIP RIGHTS IN IT. THIS DOCUMENT IS FOR USE ONLY FOR THE PROJECT IDENTIFIED IN THE TITLE BLOCK AND IS NOT TO BE USED FOR ANY REPAIR, REMODEL, OR ADDITION TO THAT PROJECT OR FOR ANY OTHER PROJECT.

AHBL
TACOMA · SEATTLE
2215 North 30th Street, Suite 300, Tacoma, WA 98403 253.383.2422 TEL
1200 Sixth Avenue, Suite 1620, Seattle, WA 98101 206.267.2425 TEL
Civil Engineers
Structural Engineers
Landscape Architects
Community Planners
Land Surveyors
Neighbors

CALL 48 HOURS BEFORE YOU DIG 1-800-424-5555

CITY OF TACOMA
PUBLIC WORKS DEPT.
ENGINEERING DIVISION
747 MARKET STREET, ROOM 520
TACOMA, WA 98402
(253) 591-5500
FAX: (509) 591-5533

NO	REVISION	DATE	APPD
4			
3			
2			
1			

FINAL CONSTRUCTION CHECKED
BY
DATE
FIELD BOOKS

DATE: OCTOBER 2014 | SCALE: AS NOTED
DESIGNED: MS / AB | CHECKED: WJF
DRAWN: FAK | FILE NAME:

DEMOLITION PLAN

10/14/2014
SEAN M. COMPTON
STATE OF WASHINGTON
29010
REGISTERED
PROFESSIONAL ENGINEER

CITY OF TACOMA
DEPARTMENT OF PUBLIC WORKS
ENVIRONMENTAL SERVICES SCIENCE AND ENGINEERING

SWASEY LIBRARY
7001 6TH AVENUE
ADA PEDESTRIAN IMPROVEMENTS

WORK ORDER NO.
AHBL JOB NO. 211579.10
SHEET NO. SHEET 10 OF 14

SWASEY BRANCH LIBRARY

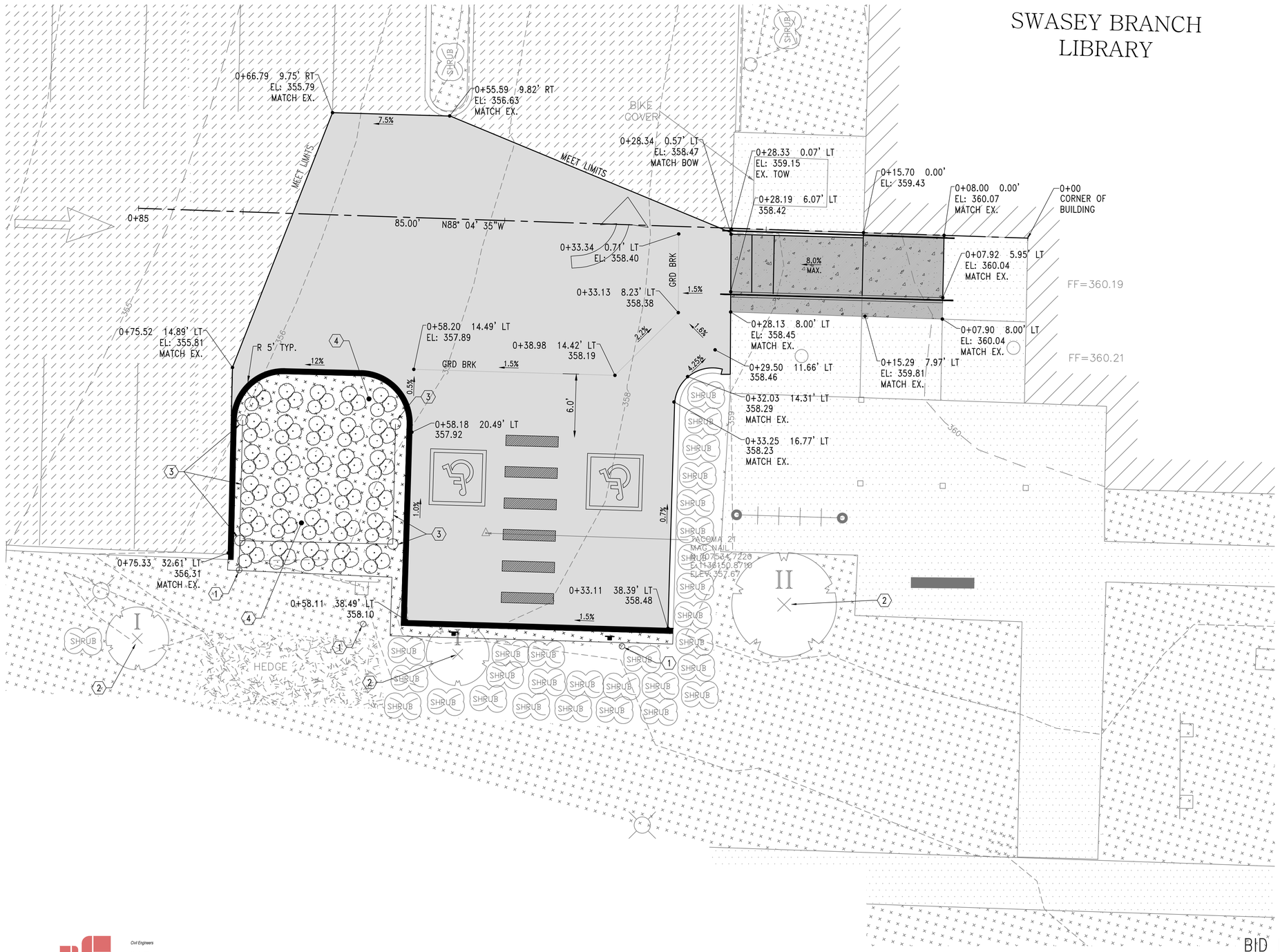

LEGAL DESCRIPTION

A PORTION OF TAX PARCEL 4470000080

LEGEND

SEE SHEET 2 FOR LEGEND.

KEY NOTES

1. ADJUST IRRIGATION HEADS TO FINISHED GRADE. ENSURE PROPER OPERATION OF IRRIGATION SYSTEM.
2. PROTECT EXISTING TREE.
3. SCHEDULE 40 PVC PIPE, ¾" OR 1" AS NECESSARY. VERIFY ADEQUATE PRESSURE AND FLOW PRIOR TO CONSTRUCTION.
4. PROVIDE FULL HEAD-TO-HEAD IRRIGATION COVERAGE OF NEW PLANTING AREA. MATCH EXISTING EQUIPMENT.

NOTES

1. ACCESSIBILITY PARKING AND AISLES SHALL HAVE A 2.0% MINIMUM SLOPE IN ALL DIRECTIONS.
2. PROTECT TREE ROOTS. ONLY HAND DIGGING IS ALLOWED WITHIN 3FT OF DRIPLINES. AFTER DEMOLITION AND ROOTS HAVE BEEN EXPOSED CALL RAMIE PIERCE (PHONE: 253-591-2048) TO SCHEDULE INSPECTION. INSPECTION SHALL BE SCHEDULED A MINIMUM OF 24HRS PRIOR TO CONSTRUCTION OF NEW SIDEWALK.
3. COORDINATE ALL CONSTRUCTION WITH FACILITY STAFF AND/OR ADJACENT BUSINESS.

CONTROL POINTS
TACOMA 20 N 707508.79 E 1135993.95 EL: 352.78
TACOMA 21 MAG NAIL N 707534.72 E 1136150.87 EL: 357.67

CIVIL & STRUCTURAL ENGINEERS
AHBL
LAND PLANNERS

GRAPHIC SCALE

5 0 2.5 5 10

(IN FEET)
1 inch = 5 ft.

BID DOCUMENTS

THESE DRAWINGS ARE NOT TO BE USED FOR CONSTRUCTION UNLESS SIGNED BY THE REVIEWING AGENCY

NOTICE
ALTERATION OF THIS DOCUMENT SHALL INVALIDATE THE PROFESSIONAL SEAL AND SIGNATURE. PUBLICATION OF THIS DOCUMENT DOES NOT DEROGATE FROM RESERVED COMMON LAW COPYRIGHT OR OTHER PROPERTY RIGHTS. USE ONLY FOR THE PROJECT IDENTIFIED IN THE TITLE BLOCK AND IS NOT TO BE USED FOR REPAIR, REMODEL OR ADDITION TO THAT PROJECT OR FOR ANY OTHER PROJECT.

AHBL
TACOMA · SEATTLE
2215 North 30th Street, Suite 300, Tacoma, WA 98403 253.383.2422 TEL
1200 Sixth Avenue, Suite 1620, Seattle, WA 98101 206.267.2425 TEL

Civil Engineers
Structural Engineers
Landscape Architects
Community Planners
Land Surveyors
Neighbors

CALL 48 HOURS BEFORE YOU DIG 1-800-424-5555

CITY OF TACOMA
PUBLIC WORKS DEPT.
ENGINEERING DIVISION
747 MARKET STREET, ROOM 520
TACOMA, WA 98402
(253) 591-5500
FAX: (509) 591-5533

NO	REVISION	DATE	APPD
4			
3			
2			
1			

FINAL CONSTRUCTION CHECKED
BY
DATE
FIELD BOOKS

DATE: OCTOBER 2014
SCALE: AS NOTED
DESIGNED: MS / AB
CHECKED: WJF
DRAWN: FAK
FILE NAME:

DEVELOPED PLAN

SEAN M. COMPTON — STATE OF WASHINGTON — 22070 — REGISTERED PROFESSIONAL ENGINEER — 10/16/2014

CITY OF TACOMA
DEPARTMENT OF PUBLIC WORKS
ENVIRONMENTAL SERVICES SCIENCE AND ENGINEERING

SWASEY LIBRARY
7001 6TH AVENUE
ADA PEDESTRIAN IMPROVEMENTS

WORK ORDER NO.
AHBL JOB NO. 211579.10
SHEET NO. SHEET 11 OF 14

SWASEY BRANCH LIBRARY

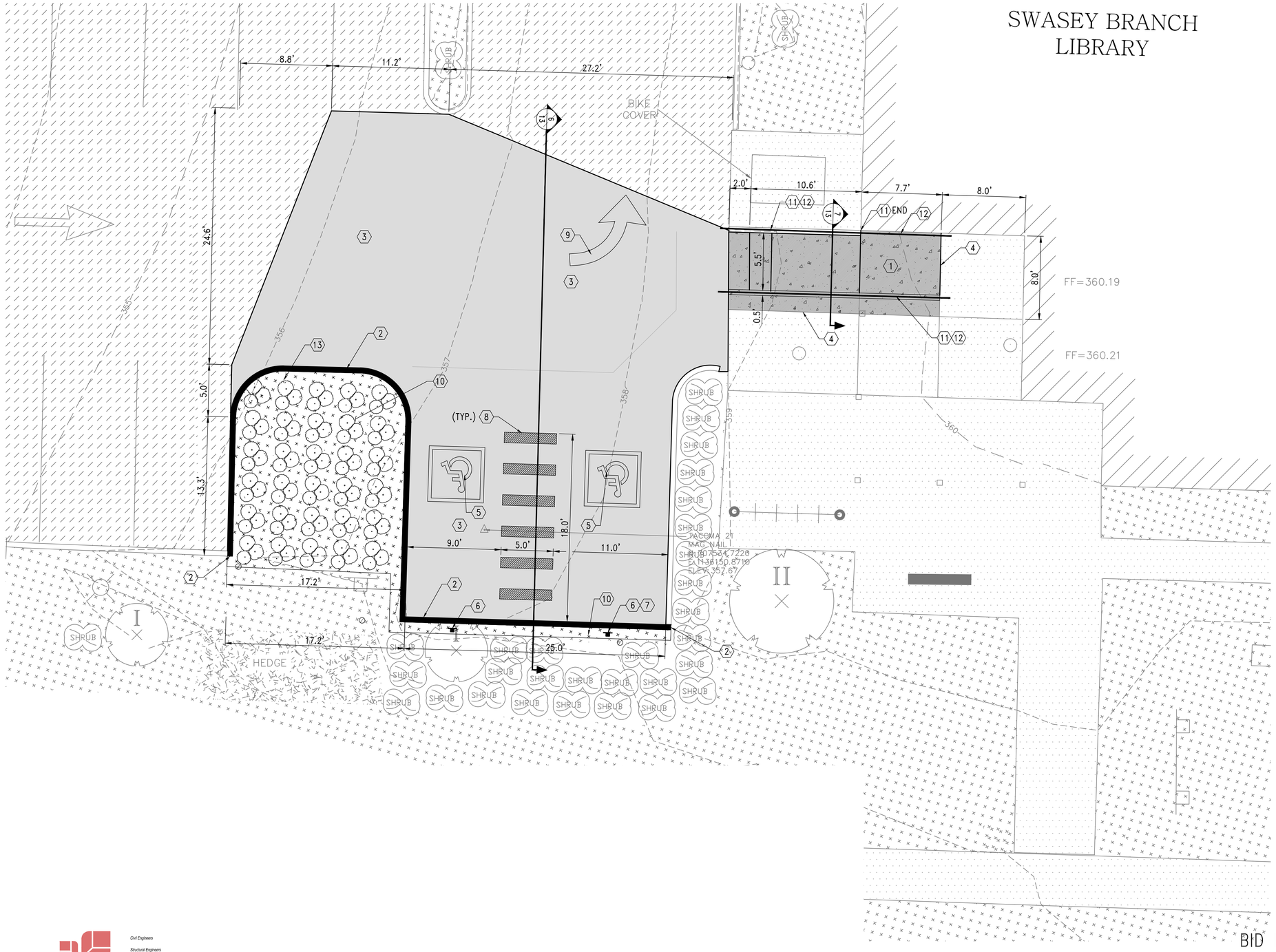

LEGAL DESCRIPTION

A PORTION OF TAX PARCEL 4470000080

LEGEND

SEE SHEET 2 FOR LEGEND.

KEY NOTES

1. PROVIDE NEW CEMENT CONCRETE SIDEWALK PER CITY OF TACOMA STANDARD PLAN SU-04.
2. PROVIDE EXTRUDED CURB PER DETAIL 3/13. PROVIDE EXPANSION JOINT BETWEEN EXISTING AND NEW CURB PER WSDOT 8-04.
3. CONSTRUCT NEW ASPHALT PAVEMENT SECTION. 2" HMA CL. ½" PG 64-22. OVER 2" CRUSHED SURFACING TOP COURSE.
4. PROVIDE CONCRETE SIDEWALK PER CITY OF TACOMA STANDARD PLAN SU-04 MATCH EXISTING GRADES. PROVIDE EXPANSION JOINT BETWEEN EXISTING AND NEW SIDEWALK.
5. PLASTIC ACCESIBILITY PARKING SPACE SYMBOL PER WSDOT STANDARD PLAN M-24.60-03.
6. PROVIDE ACCESSIBILITY SIGNS PER DETAILS 1/14 AND 2/14.
7. PROVIDE ACCESSIBILITY VAN SIGN PER DETAIL 2/14.
8. PROVIDE PLASTIC STOP LINES PER DETAIL 3/14.
9. TYPE 2 SL PLASTIC (LEFT) TRAFFIC ARROW PER WSDOT STANDARD PLAN M-24.40-01.
10. PROVIDE 4" BARK OR WOOD CHIP MULCH.
11. PROVIDE CEMENT CONCRETE TRAFFIC CURB PER CITY OF TACOMA STANDARD PLAN SU-03. NEW HANDRAIL SHALL BE ANCHORED ON CURB.
12. PROVIDE NEW HANDRAIL PER DETAIL 7/13.
13. PROVIDE (1) GALLON KINNIKINNICK (ARCTOSTAPHYLOS UVA-URSI) AT 3-FFET ON-CENTER, PER PSIPE, WSDOT 8-02.

NOTES

1. ALL DIMENSIONS ARE TO BE FIELD VERIFIED EXCEPT HANDICAP PARKING STALLS. THOSE SHALL BE CONSTRUCTED AS MARKED, TO ADA STANDARD.
2. ALL STRIPING SHALL BE THERMOPLASTIC PER SPECIFICATIONS, UNLESS NOTED OTHERWISE.
3. PROTECT TREE ROOTS. ONLY HAND DIGGING IS ALLOWED WITHIN 3FT OF DRIPLINES. AFTER DEMOLITION AND ROOTS HAVE BEEN EXPOSED CALL RAMIE PIERCE (PHONE: 253-591-2048) TO SCHEDULE INSPECTION. INSPECTION SHALL BE SCHEDULED A MINIMUM OF 24HRS PRIOR TO CONSTRUCTION OF NEW SIDEWALK.
4. COORDINATE ALL CONSTRUCTION WITH FACILITY STAFF AND/OR ADJACENT BUSINESS.

CONTROL POINTS
TACOMA 20 N 707508.79 E 1135993.95 EL: 352.78
TACOMA 21 MAG NAIL N 707534.72 E 1136150.87 EL: 357.67

AHBL — CIVIL & STRUCTURAL ENGINEERS — LAND PLANNERS

GRAPHIC SCALE

5 0 2.5 5 10

(IN FEET)
1 inch = 5 ft.

BID DOCUMENTS

THESE DRAWINGS ARE NOT TO BE USED FOR CONSTRUCTION UNLESS SIGNED BY THE REVIEWING AGENCY

NOTICE
ALTERATION OF THIS DOCUMENT SHALL INVALIDATE THE PROFESSIONAL SEAL AND SIGNATURE. PUBLICATION OF THIS DOCUMENT DOES NOT DEROGATE FROM RESERVED OWNERSHIP RIGHTS IN IT. THIS DOCUMENT IS FOR USE ONLY FOR THE PROJECT IDENTIFIED IN THE TITLE BLOCK AND IS NOT TO BE USED FOR ANY OTHER PROJECT OR ADDITION TO THAT PROJECT OR FOR ANY OTHER PROJECT.

AHBL
TACOMA · SEATTLE
2215 North 30th Street, Suite 300, Tacoma, WA 98403 253.383.2422 TEL
1200 Sixth Avenue, Suite 1620, Seattle, WA 98101 206.267.2425 TEL

Civil Engineers
Structural Engineers
Landscape Architects
Community Planners
Land Surveyors
Neighbors

CALL 48 HOURS BEFORE YOU DIG 1-800-424-5555

CITY OF TACOMA
PUBLIC WORKS DEPT.
ENGINEERING DIVISION
747 MARKET STREET, ROOM 520
TACOMA, WA 98402
(253) 591-5500
FAX: (509) 591-5533

NO	REVISION	DATE	APPD
4			
3			
2			
1			

FINAL CONSTRUCTION CHECKED
BY
DATE
FIELD BOOKS

DATE: OCTOBER 2014 | SCALE: AS NOTED
DESIGNED: MS / AB | CHECKED: WJF
DRAWN: FAK | FILE NAME:

STRIPING PLAN

11/6/2014 SEAN M. COMPTON STATE OF WASHINGTON 29010 REGISTERED PROFESSIONAL ENGINEER

CITY OF TACOMA
DEPARTMENT OF PUBLIC WORKS
ENVIRONMENTAL SERVICES SCIENCE AND ENGINEERING

SWASEY LIBRARY
7001 6TH AVENUE
ADA PEDESTRIAN IMPROVEMENTS

WORK ORDER NO.
AHBL JOB NO. 211579.10
SHEET NO. SHEET 12 OF 14

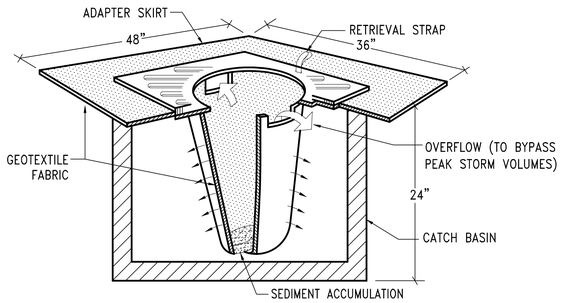

INLET PROTECTION NOTES:

1. FILTERS SHALL BE REMOVED AND CLEANED OR REPLACED AFTER EACH STORM EVENT.

1 INLET PROTECTION
NOT TO SCALE

2 NOT USED
N/A

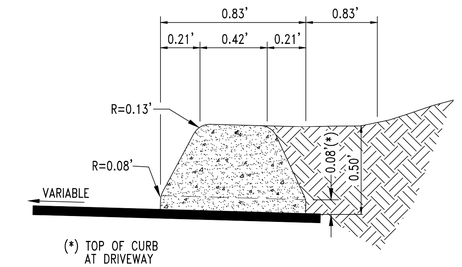

3 EXTRUDED CEMENT CONCRETE CURB
NOT TO SCALE

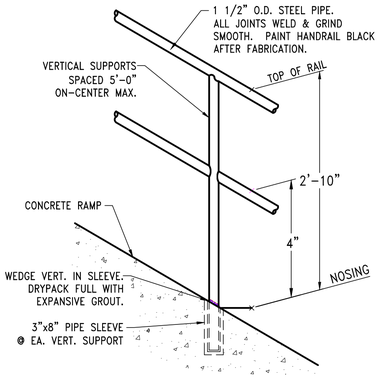

4 EXTERIOR HANDRAIL
NOT TO SCALE

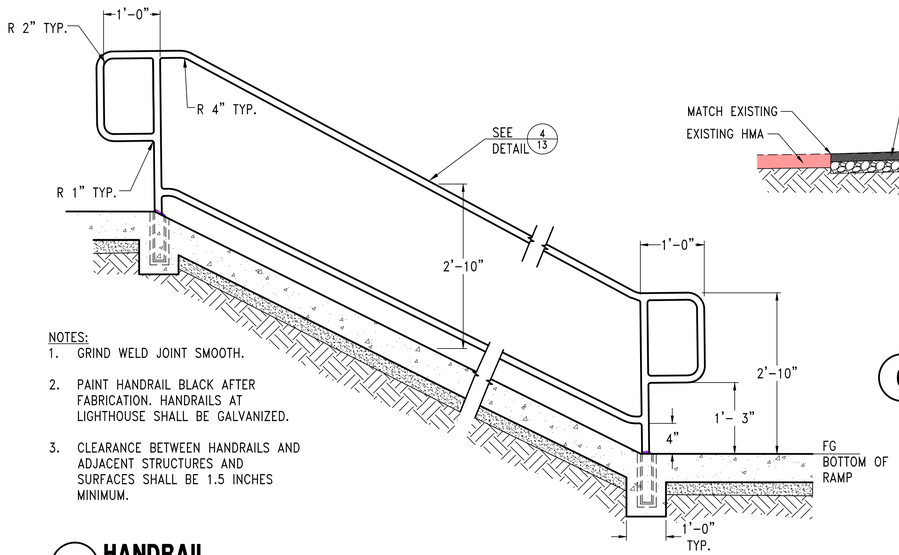

NOTES:
1. GRIND WELD JOINT SMOOTH.
2. PAINT HANDRAIL BLACK AFTER FABRICATION. HANDRAILS AT LIGHTHOUSE SHALL BE GALVANIZED.
3. CLEARANCE BETWEEN HANDRAILS AND ADJACENT STRUCTURES AND SURFACES SHALL BE 1.5 INCHES MINIMUM.

5 HANDRAIL
NOT TO SCALE

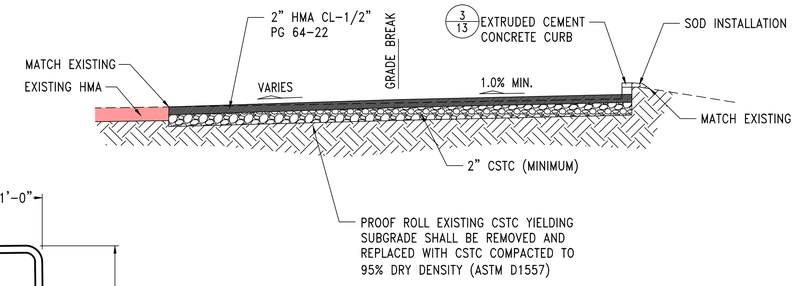

6 PAVING SECTION
NOT TO SCALE

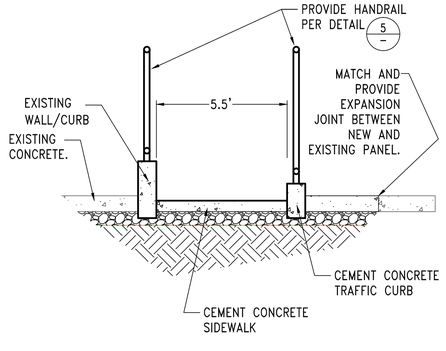

7 SIDEWALK AND HANDRAIL SECTION
NOT TO SCALE

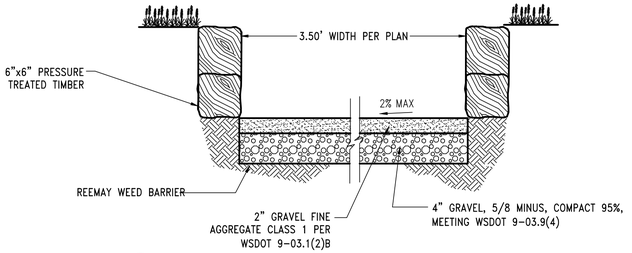

8 GRAVEL PATH
NOT TO SCALE

BID DOCUMENTS

THESE DRAWINGS ARE NOT TO BE USED FOR CONSTRUCTION UNLESS SIGNED BY THE REVIEWING AGENCY

NOTICE
ALTERATION OF THIS DOCUMENT SHALL INVALIDATE THE PROFESSIONAL SEAL AND SIGNATURE. PUBLICATION OF THIS DOCUMENT DOES NOT DEROGATE FROM RESERVED RIGHTS OF THE ARCHITECT AND ENGINEER. IT IS ISSUED ONLY FOR THE PROJECT IDENTIFIED IN THE TITLE BLOCK AND IS NOT TO BE USED FOR REPAIR, REMODEL OR ADDITION TO THAT PROJECT OR FOR ANY OTHER PROJECT.

AHBL
TACOMA · SEATTLE
2215 North 30th Street, Suite 300, Tacoma, WA 98403 253.383.2422 TEL
1200 Sixth Avenue, Suite 1620, Seattle, WA 98101 206.267.2425 TEL
Civil Engineers
Structural Engineers
Landscape Architects
Community Planners
Land Surveyors
Neighbors

CALL 48 HOURS BEFORE YOU DIG 1-800-424-5555

CITY OF TACOMA
PUBLIC WORKS DEPT.
ENGINEERING DIVISION
747 MARKET STREET, ROOM 520
TACOMA, WA 98402
(253) 591-5500
FAX: (509) 591-5533

NO	REVISION	DATE	APPD
4			
3			
2			
1			

FINAL CONSTRUCTION CHECKED
BY
DATE
FIELD BOOKS

DATE: OCTOBER 2014 | SCALE: AS NOTED
DESIGNED: MS / AB | CHECKED: WJF
DRAWN: FAK | FILE NAME:

NOTES AND DETAILS

SEAN M. COMPTON — STATE OF WASHINGTON — 20010 — REGISTERED PROFESSIONAL ENGINEER — 10/16/2014

CITY OF TACOMA
DEPARTMENT OF PUBLIC WORKS
ENVIRONMENTAL SERVICES SCIENCE AND ENGINEERING

NOTES AND DETAILS
ADA PEDESTRIAN IMPROVEMENTS

WORK ORDER NO.
AHBL JOB NO. 211579.10
SHEET NO. SHEET 13 OF 14

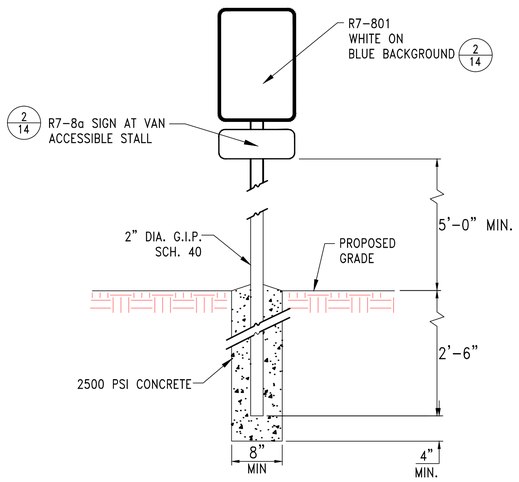

1 ACCESSIBILITY PARKING SIGNAGE
NOT TO SCALE

R7-801
12/08

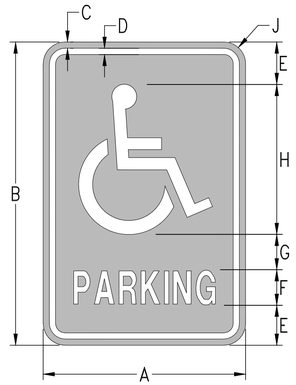

DIMENSIONS (INCHES)								
A	B	C	D	E	F	G	H	J
12	18	3/8	3/8	2 1/2	2C	2	9	1 1/2

COLORS

LEGEND & BORDER - WHITE (REFL)
SYMBOL - WHITE (REFL)
BACKGROUND - BLUE (REFL)

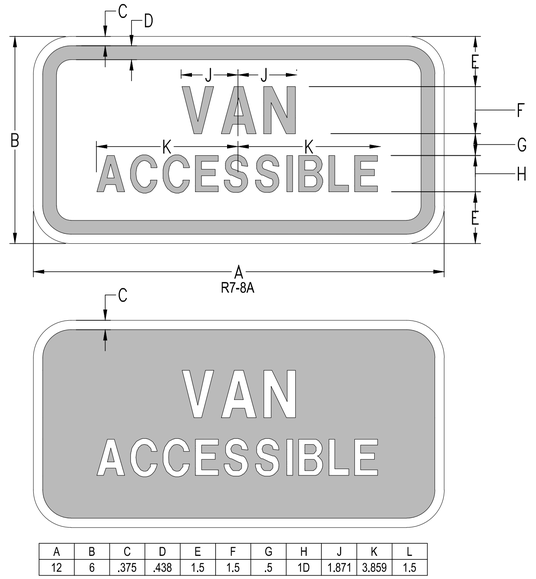

A	B	C	D	E	F	G	H	J	K	L
12	6	.375	.438	1.5	1.5	.5	1D	1.871	3.859	1.5

PARKING APPLICATION

COLORS: LEGEND - GREEN (RETROREFLECTIVE) OR BLACK
BACKGROUND - WHITE (RETROREFLECTIVE)

DIRECTIONAL APPLICATION

COLORS: LEGEND - WHITE (RETROREFLECTIVE)
BACKGROUND - BLUE (RETROREFLECTIVE)

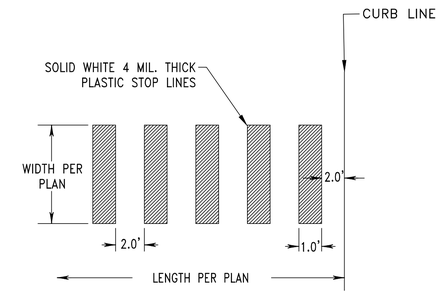

3 PLASTIC STOP LINES DETAIL
NOT TO SCALE

2 ACCESSIBILITY PARKING SIGNS
NOT TO SCALE

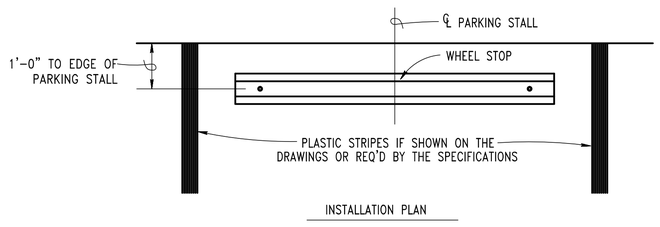

INSTALLATION PLAN

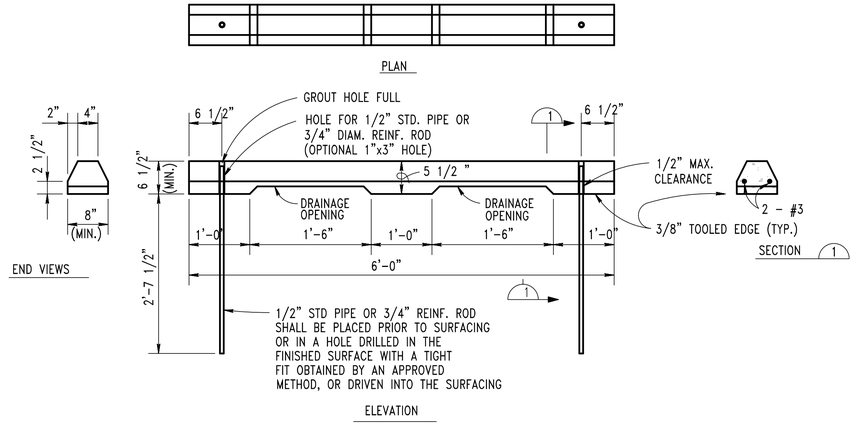

4 WHEEL STOP
NOT TO SCALE

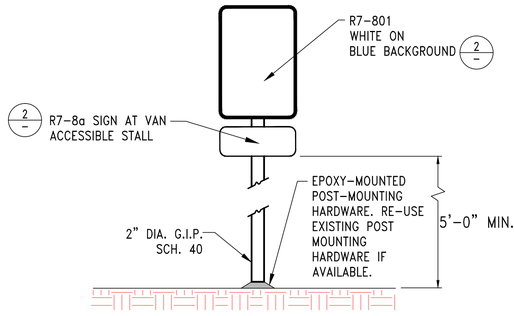

5 SURFACE MOUNTED ACCESSIBILITY PARKING SIGNAGE
NOT TO SCALE

BID DOCUMENTS

THESE DRAWINGS ARE NOT TO BE USED FOR CONSTRUCTION UNLESS SIGNED BY THE REVIEWING AGENCY

NOTICE
ALTERATION OF THIS DOCUMENT SHALL INVALIDATE THE PROFESSIONAL SEAL AND SIGNATURE. PUBLICATION OF THIS DOCUMENT DOES NOT DEROGATE FROM RESERVED OWNERSHIP RIGHTS IN IT. THIS DOCUMENT IS FOR USE ONLY FOR THE PROJECT IDENTIFIED IN THE TITLE BLOCK AND IS NOT TO BE USED FOR REPAIR, REMODEL OR ADDITION TO THAT PROJECT OR FOR ANY OTHER PROJECT.

AHBL
TACOMA · SEATTLE
2215 North 30th Street, Suite 300, Tacoma, WA 98403 253.383.2422 TEL
1200 Sixth Avenue, Suite 1620, Seattle, WA 98101 206.267.2425 TEL
Civil Engineers
Structural Engineers
Landscape Architects
Community Planners
Land Surveyors
Neighbors

CALL 48 HOURS
BEFORE YOU DIG
1-800-424-5555

CITY OF TACOMA
PUBLIC WORKS DEPT.
ENGINEERING DIVISION
747 MARKET STREET, ROOM 520
TACOMA, WA 98402
(253) 591-5500
FAX: (509) 591-5533

NO	REVISION	DATE	APPD
4			
3			
2			
1			

FINAL CONSTRUCTION CHECKED
BY
DATE
FIELD BOOKS

DATE: OCTOBER 2014
SCALE: AS NOTED
DESIGNED: MS / AB
CHECKED: WJF
DRAWN: FAK
FILE NAME:

NOTES AND DETAILS

SEAN M. COMPORT
STATE OF WASHINGTON
21010
REGISTERED
PROFESSIONAL ENGINEER
10/14/2014

CITY OF TACOMA
DEPARTMENT OF PUBLIC WORKS
ENVIRONMENTAL SERVICES SCIENCE AND ENGINEERING

NOTES AND DETAILS
ADA PEDESTRIAN IMPROVEMENTS

WORK ORDER NO.
AHBL JOB NO. 211579.10
SHEET NO. SHEET 14 OF 14