TACOMA POWER ELECTRIC VEHICLE CHARGERS
TACOMA, WASHINGTON

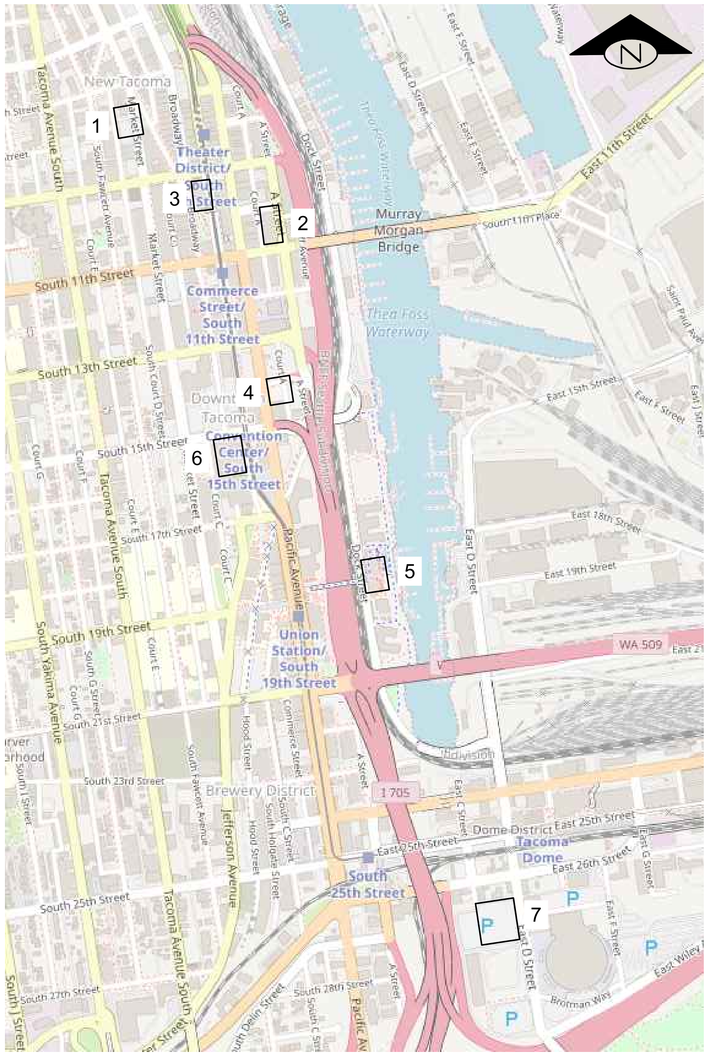

LOCATION MAP

PROJECT INFORMATION

THIS PROJECT INCLUDES INSTALLING ELECTRICAL DISTRIBUTION EQUIPMENT AND ASSOCIATED INFRASTRUCTURE TO ENERGIZE EV CHARGERS AT SEVEN (7) LOCATIONS IN DOWNTOWN TACOMA.

SITES

(1) MUNICIPAL PARKING LOT
728 MARKET ST

(2) TACOMA PARKING GARAGE
110 SOUTH 10TH ST

(3) PARK PLAZA GARAGE
923 COMMERCE ST

(4) 14TH ST LOT
1401 PACIFIC AVENUE

(5) MUSEUM OF GLASS GARAGE
1801 DOCK ST

(6) CONVENTION CENTER GARAGE
1500 COMMERCE ST

(7) TACOMA DOME, LOT A
2727 EAST D STREET

APPLICABLE CODES

ALL WORK SHALL CONFORM TO ALL PERTINENT CODES, REGULATIONS, LAWS, AND ORDINANCES AS REQUIRED BY THE STATE OF WASHINGTON.

2022 TACOMA MUNICIPAL CODE
2022 NATIONAL ELECTRICAL CODE
2018 WASHINGTON STATE ENERGY CODE (WAC 51-11C)
2021 INTERNATIONAL BUILDING CODE
2021 INTERNATIONAL FIRE CODE
2021 INTERNATIONAL MECHANICAL CODE
2021 INTERNATIONAL EXISTING BUILDING CODE

IN THE EVENT OF CONFLICT, THE MOST RESTRICTIVE CODE SHALL PREVAIL.

LEGEND

- (2) CHARGERS ON PEDESTAL
- (1) WALL MOUNT CHARGER
- CONDUIT
- DETAIL (NOT TO SCALE) — A / SH# — DETAIL DESIGNATOR
- DISCONNECT SWITCH
- J — JUNCTION BOX
- UNDERGROUND CONDUIT
- X — WIRE NOTE
- X — CONSTRUCTION NOTE
- GROUND WELL

ABBREVIATIONS

AIC	AMPERE INTERRUPTING CAPACITY
ALT	ALTERNATIVE
CDF	CONTROLLED DENSITY FILL
CU	COPPER
EV	ELECTRIC VEHICLE
MCB	MAIN CIRCUIT BREAKER
MLO	MAIN LUGS ONLY
NM	NON-METALLIC
NTS	NOT TO SCALE
PH	PHASE
PVC	POLYVINYL CHLORIDE
RGS	RIGID GALVANIZED STEEL
SERV	SERVICE
SP	SPACE
SWBD	SWITCHBOARD
TPU	TACOMA PUBLIC UTILITY
V	VOLTS

SHEET INDEX

GENERAL NOTES

1. THE PLANS DO NOT SHOW ALL UNDERGROUND UTILITIES. THE CONTRACTOR SHALL INVESTIGATE UTILITIES PRIOR TO ANY FOUNDATION EXCAVATION AND CONDUIT TRENCHING TO AVOID DAMAGE TO ANY UNDERGROUND UTILITIES. CONTACT THE OWNER'S ENGINEER IF PROPOSED CONSTRUCTION CONFLICTS WITH ANY EXISTING UTILITIES. ALL EXISTING UTILITY INFRASTRUCTURE TO BE PROTECTED AT ALL TIMES THROUGHOUT CONSTRUCTION.
2. RESTORE ALL IMPACTED AREAS TO ORIGINAL CONDITIONS INCLUDING BUT NOT LIMITED TO RETAINING WALL, LANDSCAPING, PAVEMENT, CONCRETE, BACKFILL, CURB AND GUTTER.
3. ALL EQUIPMENT, BREAKERS, DISCONNECTS, AND CHARGERS TO BE CLEARLY MARKED USING PHENOLIC LABEL STATING TACOMA POWER AS THE OWNING PARTY OF THE MENTIONED EQUIPMENT.
4. UNFUSED DISCONNECTS SHALL BE HEAVY DUTY TYPE, HORSEPOWER RATED WITH INTERLOCKING COVER, APPROPRIATELY NEMA RATED FOR THE LOCATION INSTALLED. DISCONNECT HANDLE SHALL BE ON EXTERIOR OF ENCLOSURE AND BE LOCKABLE IN BOTH THE OPEN AND CLOSED POSITION. LABELED WITH THE LOAD SERVED, VOLTAGE, PHASE, HORSEPOWER, AND THE PANEL AND CIRCUIT NUMBER FROM WHERE IT IS FED. ACCEPTABLE MANUFACTURERS INCLUDE SQUARE D, SIEMENS, GE, EATON, OR APPROVED EQUAL.
5. PANELBOARDS SHALL BE HEAVY DUTY, COPPER BUS, CONTINUOUS DUTY WITH SHORT CIRCUIT CURRENT RATING (SCCR) PER TACOMA POWER STANDARDS C-SV-4000. CIRCUIT BREAKERS SHALL COMPLY WITH WSDOT 2023 STANDARD SPECIFICATION 9-29.24. ENCLOSURE CONSTRUCTION SHALL BE SURFACE MOUNT NEMA 1. ACCEPTABLE MANUFACTURERS INCLUDE SQUARE D, SIEMENS, GE, EATON, OR APPROVED EQUAL.
6. DO NOT DRILL ANCHORS INTO PRE-STRESSED CONCRETE STRUCTURE. ATTACH TO NON TENSIONED POURED IN PLACE STRUCTURE ONLY.
7. ALL INSTALLATIONS TO MEET THE NEC, NFPA, AND CITY OF TACOMA STANDARDS.
8. PVC IS SCHEDULE 40 UNLESS NOTED OTHERWISE.
9. IF INFORMATION IS SHOWN ANYWHERE IN THE PLANS IT IS THE SAME AS SHOWN EVERYWHERE IT IS APPLICABLE.
10. DIMENSIONS ARE PROVIDED IN DETAILS TO ESTABLISH APPROXIMATE TOTAL AREA WHERE EQUIPMENT CAN BE INSTALLED. ACTUAL/FINAL DIMENSIONS TO BE COORDINATED IN THE FIELD WHEN EXACT DIMENSIONS OF EQUIPMENT ARE ESTABLISHED.
11. THE FURNISHING OF THE FOLLOWING EQUIPMENT IS NOT IN CONTRACT (NIC): ELECTRIC VEHICLE CHARGERS, CHARGER MOUNTING PEDESTALS WHERE SHOWN, CABLE MANAGEMENT SYSTEMS, BREAKAWAY BASEPLATES, AND NEW PAD MOUNTED SERVICE CABINETS. THESE EQUIPMENT ARE TO BE INSTALLED BY CONTRACTOR.
12. CONDUIT LAYOUT AND EQUIPMENT LOCATIONS ARE DIAGRAMMATIC, FINAL PLACEMENT IS TO BE COORDINATED IN THE FIELD WITH OTHER TRADES AND PROJECT

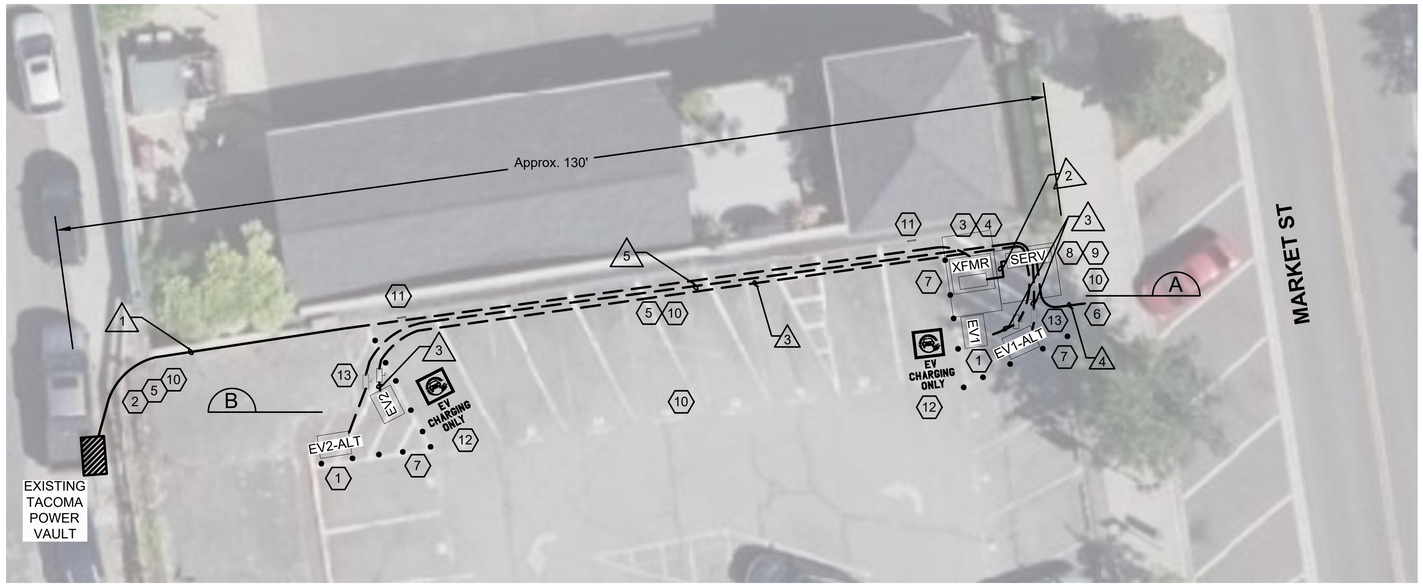

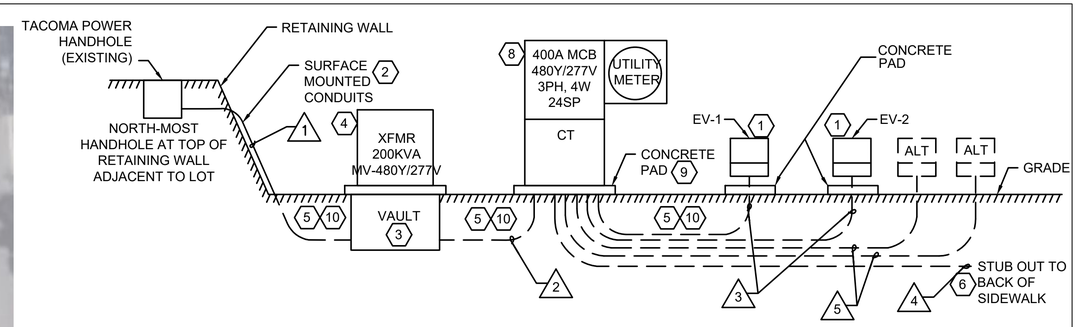

WIRE NOTES

1. (2) 3"RGS, CONDUCTORS PER TACOMA POWER
2. (1) 4"PVC, 4-500MCM, #2/0G; (1) 4" SPARE
3. (1) 1.5"PVC, 4#4, #8G CU
4. (1) 10' LONG 2" PVC CONDUIT STUB OUT
5. (1) 1.5" PVC, PULL STRING

ELEVATION VIEW

NOT TO SCALE

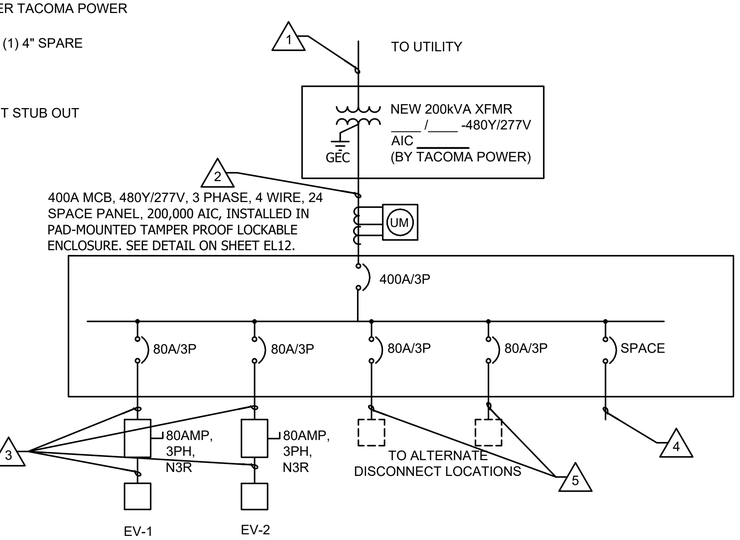

ONE-LINE DIAGRAM

NOT TO SCALE

CONSTRUCTION NOTES

1. INSTALL CONCRETE FOUNDATION AND OWNER FURNISHED SMART DC EV CHARGER PER MANUFACTURER SPECIFICATION AND DETAIL ON DRAWING EL9.
2. EXCAVATE NORTH SIDE OF VAULT, CORE HOLE THROUGH VAULT AND THROUGH RETAINING WALL PER TACOMA POWER CUSTOMER DRAWING. RUN GRS CONDUITS EXPOSED DOWN FACE OF RETAINING WALL THEN UNDERGROUND ACROSS PARKING LOT TO NEW XFMR VAULT IN PARKING LOT PER TACOMA POWER STANDARD C-UG-1100.
3. FURNISH AND INSTALL 5X5X4 XFMR VAULT PER TACOMA POWER STANDARD A-UG-1150, A-UG-1200, AND C-UG-1700. SEE DETAIL A FOR EQUIPMENT LAYOUT.
4. 200 KVA XFMR MV-480Y/277V 3-PH TO BE FURNISHED AND INSTALLED BY TACOMA POWER. XFMR IS SET ON TOP OF VAULT.
5. TRENCH AND BURY CONDUIT PER TACOMA POWER STANDARD C-UG-1100.
6. INSTALL STUBOUT TOWARD BACK OF SIDEWALK.
7. FURNISH AND INSTALL PROTECTIVE BOLLARDS TO PROTECT XFMR, EV CHARGERS AND SERVICE CABINET PER TACOMA POWER STANDARD C-UG-1400. COORDINATE FINAL LOCATION WITH TPU INSPECTOR.
8. INSTALL OWNER FURNISHED SERVICE-RATED 400A, 480Y/277V, 3 PHASE, 4 WIRE, 24 SPACE SERVICE CABINET WITH 400A MAIN BREAKER, TACOMA POWER METER BASE, AND CURRENT TRANSFORMER. SEE DETAIL ON DRAWING EL12 AND THIS DRAWING FOR BREAKER SCHEDULE. REFERENCE TACOMA POWER STANDARD C-MR-0005 AND C-MR-0020 FOR METERING.
9. FURNISH AND INSTALL CONCRETE BASE AND GROUNDING UNDER SERVICE CABINET PER DETAIL ON DRAWING EL11 AND NEC.
10. PATCH RETAINING WALL CORES. RESTORE AREA LANDSCAPING, PAVEMENT, CONCRETE, BACKFILL, CURBING AND GUTTER TO ORIGINAL CONDITION.
11. FURNISH AND INSTALL EV CHARGING SIGNS PER DETAIL ON DRAWING EL10.
12. EV CHARGING PAVEMENT MARKINGS PER DETAIL ON DRAWING EL10 WILL BE PERFORMED BY OTHERS.
13. FURNISH AND INSTALL NEMA 3R RATED, 3PH, 80A NONFUSED DISCONNECT SWITCH PER NEC.

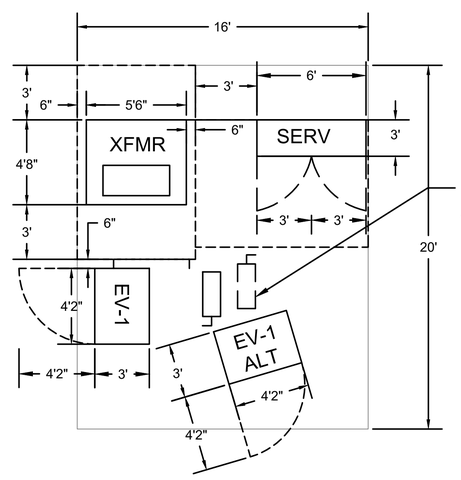

TRANSFORMER, SERVICE CABINET, EV-1 & EV-1 ALT LAYOUT

DETAIL A
NOT TO SCALE EL1

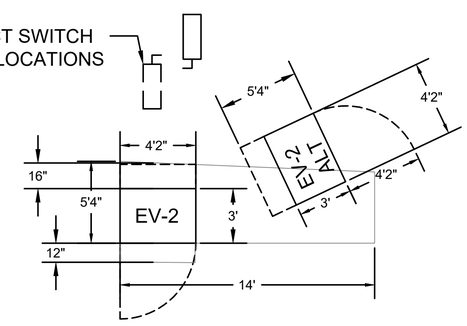

EV-2 & EV-2 ALT LAYOUT

DETAIL B
NOT TO SCALE EL1

TACOMA POWER | TACOMA WATER | TACOMA RAIL
TACOMA PUBLIC UTILITIES

concord ENGINEERING

NO	REVISION	DATE	APPD

FINAL CONSTRUCTION CHECKED	DATE 1/18/23	SCALE NTS
BY	DESIGNED NB	CHECKED XZ
DATE	DRAWN LS	PROJECT NAME
FIELD BOOKS	DRAWING NAME EL1	

XIAOPING ZHANG, STATE OF WASHINGTON, 40434, REGISTERED PROFESSIONAL ENGINEER, 4/6/2023

TACOMA PUBLIC UTILITIES

DOWNTOWN TACOMA EVSE
MUNICIPAL PARKING LOT
728 MARKET ST

SPEC. NO.
WBS NO.
SHEET NO. 2 OF 16

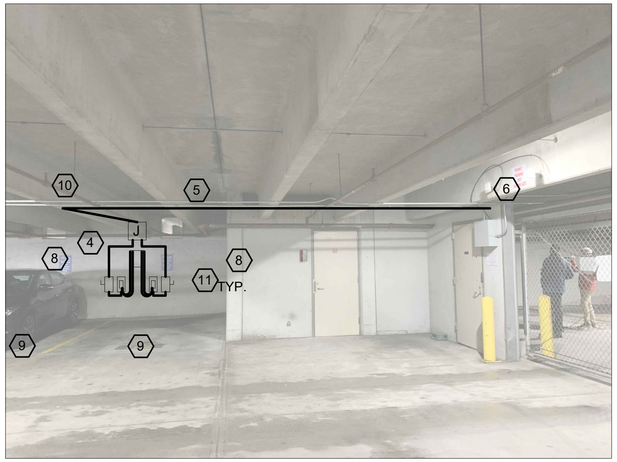

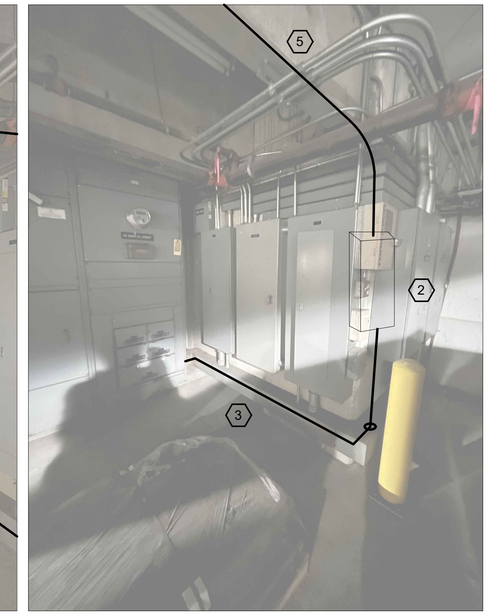

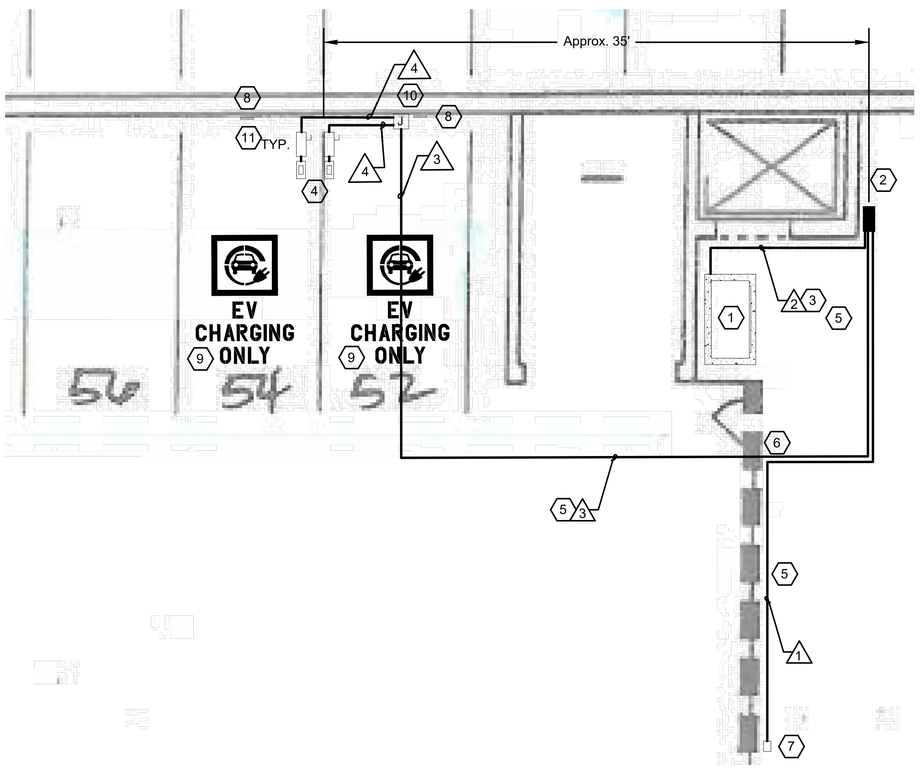

CONSTRUCTION NOTES

1. RE-PURPOSE EXISTING 200A 3P SWITCH AND REPLACE FUSES WITH NEW 200A FUSES
2. REMOVE (2) EXISTING CONTACTOR CABINETS, TIME CLOCK AND ASSOCIATED UNUSED EQUIPMENT. FURNISH AND INSTALL A NEW PANEL RATED 200A, MLO, 208Y/120V.
3. REMOVE EXISTING CONDUCTORS BETWEEN EXISTING SWITCHBOARD AND EXISTING CONTACTOR ENCLOSURES. MODIFY EXISTING GUTTER AS REQUIRED TO RUN FEEDERS TO THE NEW 200 AMP PANELBOARD.
4. INSTALL (2) TWO OWNER FURNISHED WALL-MOUNTED LEVEL-2 CHARGERS AND CABLE MANAGEMENT SYSTEMS PER DETAIL ON DRAWING EL8 AT PARKING STALLS (52 AND 54) ADJACENT TO THE EXISTING LEVEL-2 EV CHARGERS.
5. SURFACE MOUNT GRS CONDUIT ON WALL AND UNDER CONCRETE BEAMS AS SHOWN IN PLAN.
6. CORE DRILL THROUGH WALL BY THE ENTRANCE DOOR FOR CONDUIT INSTALLATION.
7. FURNISH AND INSTALL 12X12X4 NM NEMA 4 JUNCTION BOX FOR COMMUNICATION GATEWAY. LOCATE WITHIN 160' OF CHARGING UNITS WHERE CELL SIGNAL IS STRONGEST. SEE DETAIL ON DRAWING EL8.
8. FURNISH AND INSTALL EV CHARGING SIGNS PER DETAIL ON DRAWING EL10.
9. EV CHARGING PAVEMENT MARKINGS PER DETAIL ON DRAWING EL10 WILL BE PERFORMED BY OTHERS.
10. FURNISH AND INSTALL 16X16X4 NEMA 4 JUNCTION BOX.
11. FURNISH AND INSTALL DISCONNECT FOR EACH CHARGER PER NEC.

WIRE NOTES

1. (1) 3/4"C, 2#12, #12G
2. (1) 2"C, 3-#4/0, #4G
3. (1) 1.25"C, 4#8, #8G CU; (1) 2" SPARE CONDUIT
4. (1) 1.25"C, 4#8, #8G CU

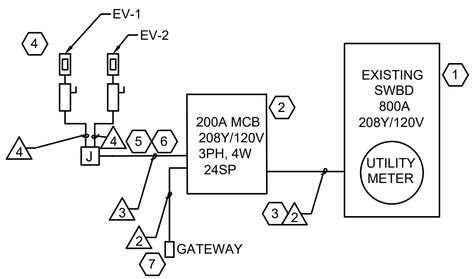

BLOCK DIAGRAM

NOT TO SCALE

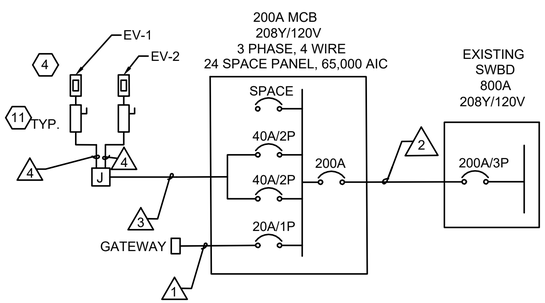

ONE LINE DIAGRAM

NOT TO SCALE

TACOMA POWER | TACOMA WATER | TACOMA RAIL
TACOMA PUBLIC UTILITIES

concord ENGINEERING

NO	REVISION	DATE	APPD

FINAL CONSTRUCTION CHECKED	DATE 1/18/23	SCALE NTS	
BY	DESIGNED NB	CHECKED XZ	
DATE	DRAWN LS	PROJECT NAME	
FIELD BOOKS	DRAWING NAME EL2		

XIAOPING ZHANG — STATE OF WASHINGTON — 32212 REGISTERED PROFESSIONAL ENGINEER
4/6/2023

TACOMA PUBLIC UTILITIES

DOWNTOWN TACOMA EVSE
TACOMA PARKING GARAGE
110 SOUTH 10TH ST

SPEC. NO.
WBS NO.
SHEET NO. 3 OF 16

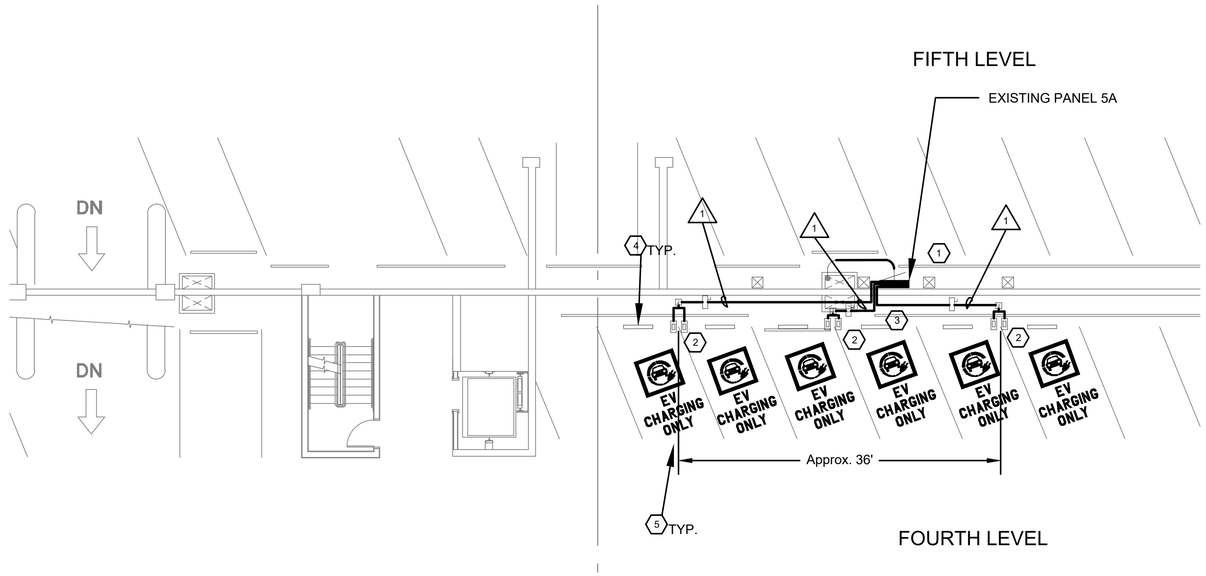

CONSTRUCTION NOTES

1. FEED NEW EV CHARGERS FROM EXISTING PANEL 5A LOCATED ON THE FIFTH FLOOR.
2. INSTALL (6) SIX OWNER FURNISHED WALL-MOUNTED LEVEL-2 CHARGERS PER DETAIL ON DRAWING EL8. USE POWER SHARING. WIRE CONFIGURATION PER MANUFACTURER'S INSTALLATION MANUAL.
3. FURNISH AND INSTALL CONDUIT FROM PANEL 5A TO NEW EV CHARGERS THROUGH THE WALL OPENING CLOSEST TO PANEL 5A.
4. FURNISH AND INSTALL EV CHARGING SIGNS PER DETAIL ON DRAWING EL10.
5. EV CHARGING PAVEMENT MARKINGS PER DETAIL ON DRAWING EL10 WILL BE PERFORMED BY OTHERS.
6. FURNISH AND INSTALL 12X12X4 NM NEMA 4 JUNCTION BOX FOR COMMUNICATION GATEWAY. LOCATE WITHIN 160' OF CHARGING UNITS WHERE CELL SIGNAL IS STRONGEST. SEE DETAIL ON DRAWING EL8.
7. FURNISH AND INSTALL DISCONNECT PER NEC.

WIRE NOTES

1. 1"C, 4#4, #8G CU
2. 3/4"C, 2#12, #12G

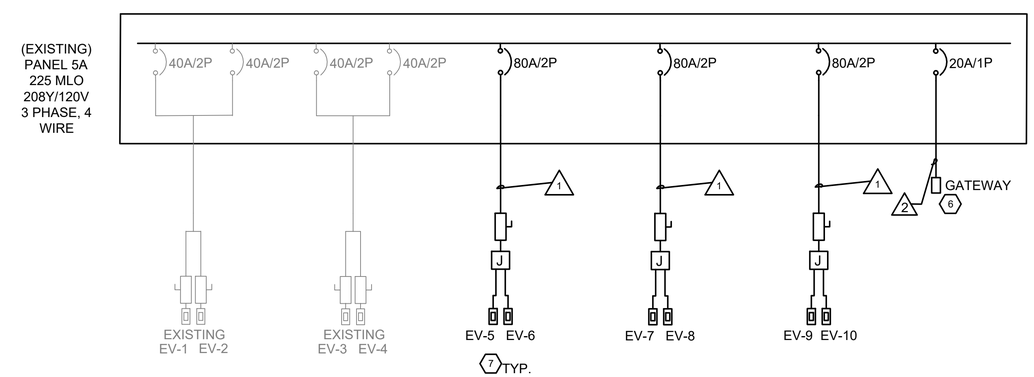

ONE-LINE DIAGRAM

NOT TO SCALE

TACOMA POWER | TACOMA WATER | TACOMA RAIL
TACOMA PUBLIC UTILITIES

concord ENGINEERING

NO	REVISION	DATE	APPD

FINAL CONSTRUCTION CHECKED
BY
DATE
FIELD BOOKS

DATE 1/18/23	SCALE NTS	
DESIGNED NB	CHECKED XZ	
DRAWN LS	PROJECT NAME	
DRAWING NAME EL3		

XIAOPING ZHANG
STATE OF WASHINGTON
20040434
REGISTERED PROFESSIONAL ENGINEER
4/6/2023

TACOMA PUBLIC UTILITIES

DOWNTOWN TACOMA EVSE
PARK PLAZA GARAGE
923 COMMERCE ST

SPEC. NO.
WBS NO.
SHEET NO. 4
SHEET 4 OF 16

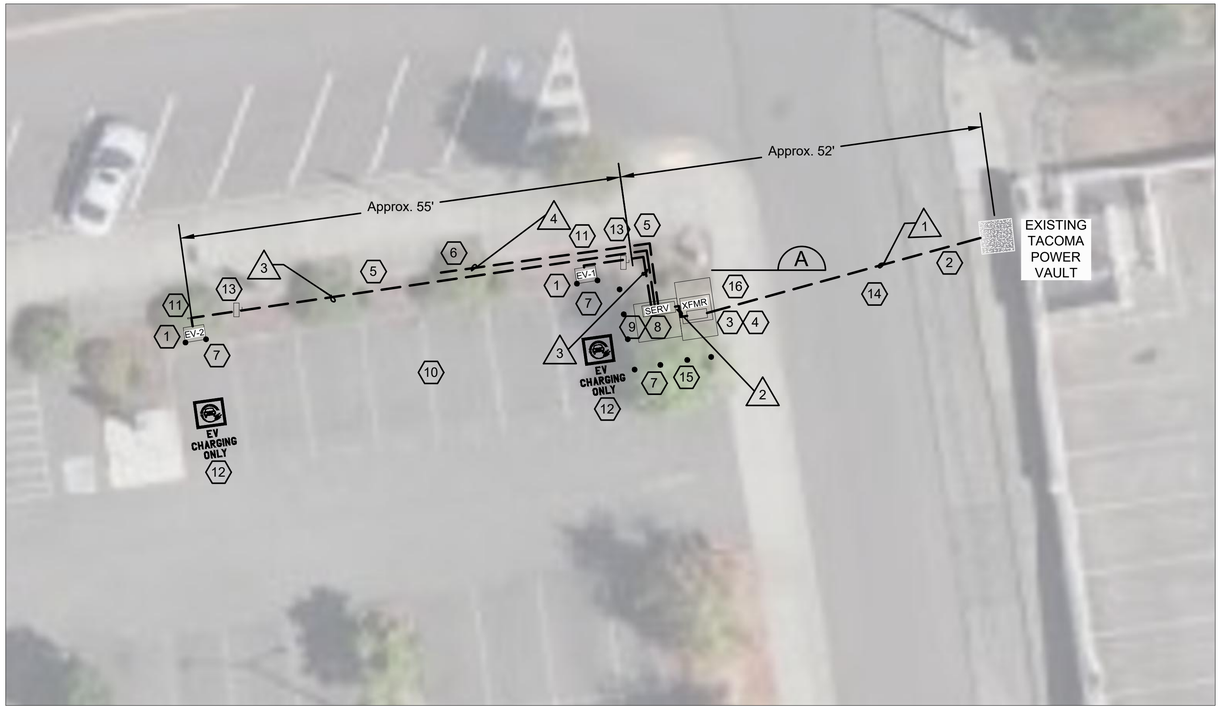

CONSTRUCTION NOTES

1. INSTALL CONCRETE FOUNDATION AND OWNER FURNISHED SMART DC EV CHARGER PER MANUFACTURER SPECIFICATION AND DETAIL ON DRAWING EL9.
2. EXCAVATE THROUGH SIDEWALK TO EXPOSE WEST SIDE OF TACOMA POWER VAULT. CORE HOLE FOR 3" CONDUIT THROUGH SIDE OF VAULT AND SEAL AND GROUT HOLE AROUND PVC BELL END. COORDINATE ACCESS TO VAULT WITH TACOMA POWER.
3. FURNISH AND INSTALL 5X5X4 XFMR VAULT PER TACOMA POWER STANDARD A-UG-1150, A-UG-1200, AND C-UG-1700. SEE DETAIL A FOR EQUIPMENT LAYOUT.
4. 200 KVA XFMR MV-480Y/277V 3-PH TO BE FURNISHED AND INSTALLED BY TACOMA POWER. XFMR IS SET ON TOP OF VAULT.
5. TRENCH AND BURY CONDUIT 36" DEEP PER TACOMA POWER STANDARD C-UG-1100. INSTALL CONDUIT DIRECTLY BEHIND CURB OR SIDEWALK TO AVOID TREE ROOTS. COORDINATE WITH FIELD INSPECTOR.
6. INSTALL STUBOUT TO BACK OF SIDEWALK, APPROXIMATE LOCATION AS SHOWN. COORDINATE FINAL LOCATION WITH OWNER. UPDATE AS-BUILT DRAWINGS.
7. FURNISH AND INSTALL PROTECTIVE BOLLARDS TO PROTECT XFMR, EV CHARGERS AND SERVICE CABINET PER TACOMA POWER STANDARD C-UG-1400. COORDINATE FINAL LOCATION WITH TPU INSPECTOR.
8. INSTALL OWNER FURNISHED SERVICE-RATED 400A, 480Y/277V, 3 PHASE, 4 WIRE, 24 SPACE SERVICE CABINET WITH 400A MAIN BREAKER, TACOMA POWER METER BASE, AND CURRENT TRANSFORMER. SEE DETAIL ON DRAWING EL12 AND THIS DRAWING FOR BREAKER SCHEDULE. REFERENCE TACOMA POWER STANDARD C-MR-0005 AND C-MR-0020 FOR METERING.
9. FURNISH AND INSTALL CONCRETE BASE AND GROUNDING UNDER SERVICE CABINET PER DETAIL ON DRAWING EL11 AND NEC.
10. PATCH CORES AND RESTORE ALL AREA LANDSCAPING, PAVEMENT, CONCRETE, BACKFILL, CURBING AND GUTTER TO ORIGINAL CONDITION.
11. FURNISH AND INSTALL EV CHARGING SIGNS PER DETAIL DRAWING EL10.
12. EV CHARGING PAVEMENT MARKINGS PER DETAIL ON DRAWING EL10 WILL BE PERFORMED BY OTHERS.
13. FURNISH AND INSTALL NEMA 3R RATED, 3PH, 80A NONFUSED DISCONNECT SWITCH PER NEC.
14. OPEN CUT ROADWAY PER CITY OF TACOMA STANDARDS. USE SCHEDULE 80 PVC UNDER ROADWAY. BACKFILL TRENCH USING WSDOT APPROVED CDF.
15. COORDINATE VEGETATION REMOVAL AND REMEDIATION WITH FIELD INSPECTOR TO ACCOMMODATE NEW EQUIPMENT. REMOVE ALL ABOVE AND BELOW GROUND PORTIONS OF BOHEMIAN KNOTWEED PATCH AND DISPOSE OFFSITE VEGETATION REMOVED WITHOUT LEAVING FRAGMENTS. WITHIN THE PARKING LOT, PLANT A SAME OR SIMILAR TREE FOR EACH TREE REMOVED AND REPLACE IMPACTED BUSHES OR SHRUBS WITH SAME OR SIMILAR SPECIES AND SIZE. REFER TO TACOMA MUNICIPAL CODE 13.06.090.B FOR LANDSCAPING STANDARDS.
16. TRENCH WITHIN THE SIDEWALK CONCRETE PANEL IMMEDIATE NORTH OR SOUTH OF EXISTING VAULT. AVOID CURB RAMPS AND CURB RADIUS OF SIDEWALK.

WIRE NOTES

1. (2) 3"PVC, CONDUCTORS PER TACOMA POWER
2. (1) 4"PVC, 4-500MCM, #2/0G; (1) 4" SPARE
3. (1) 1.5"PVC, 4#4, #8G CU
4. (2) 2" PVC CONDUIT STUB OUT

GENERAL NOTES

1. SOILS AT THIS LOCATION MAY BE CONTAMINATED. EXCAVATE, REMOVE AND DISPOSE OF CONTAMINATED SOIL PER RCRA SUBTITLE C OR D. THE EXCAVATED AREA SHALL BE REPLACED WITH CLEAN BACKFILL.

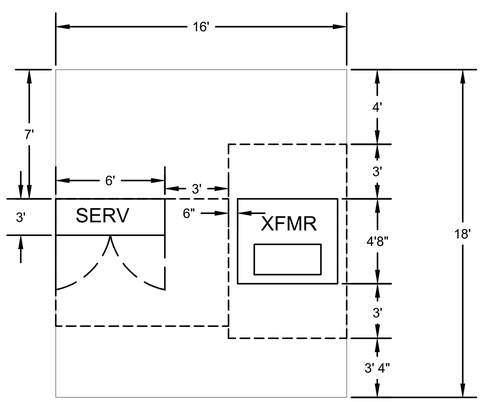

TRANSFORMER AND SERVICE CABINET LAYOUT

DETAIL A
NOT TO SCALE EL4

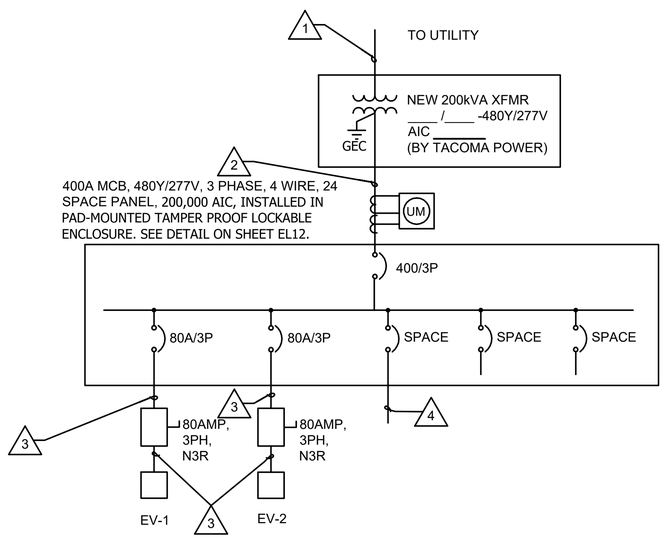

ONE-LINE DIAGRAM

NOT TO SCALE

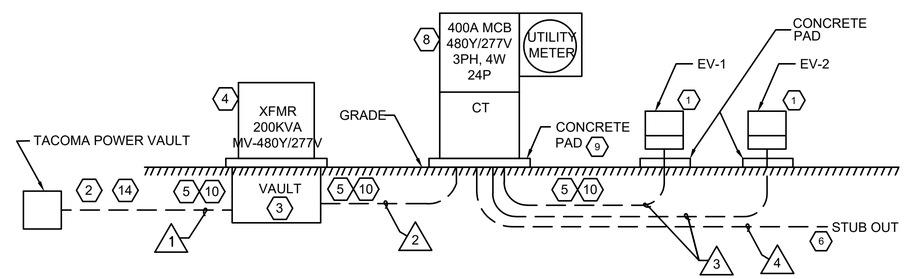

ELEVATION VIEW

NOT TO SCALE

TACOMA POWER | TACOMA WATER | TACOMA RAIL
TACOMA PUBLIC UTILITIES

concord ENGINEERING

NO	REVISION	DATE	APPD

FINAL CONSTRUCTION CHECKED
BY
DATE
FIELD BOOKS

DATE 1/18/23	SCALE NTS	
DESIGNED NB	CHECKED XZ	
DRAWN LS	PROJECT NAME	
DRAWING NAME EL4		

HAOPING ZHANG, STATE OF WASHINGTON, 40434, REGISTERED PROFESSIONAL ENGINEER
4/6/2023

TACOMA PUBLIC UTILITIES

DOWNTOWN TACOMA EVSE
14TH ST LOT
1401 PACIFIC AVENUE

SPEC. NO.
WBS NO.
SHEET NO. 5
SHEET 5 OF 16

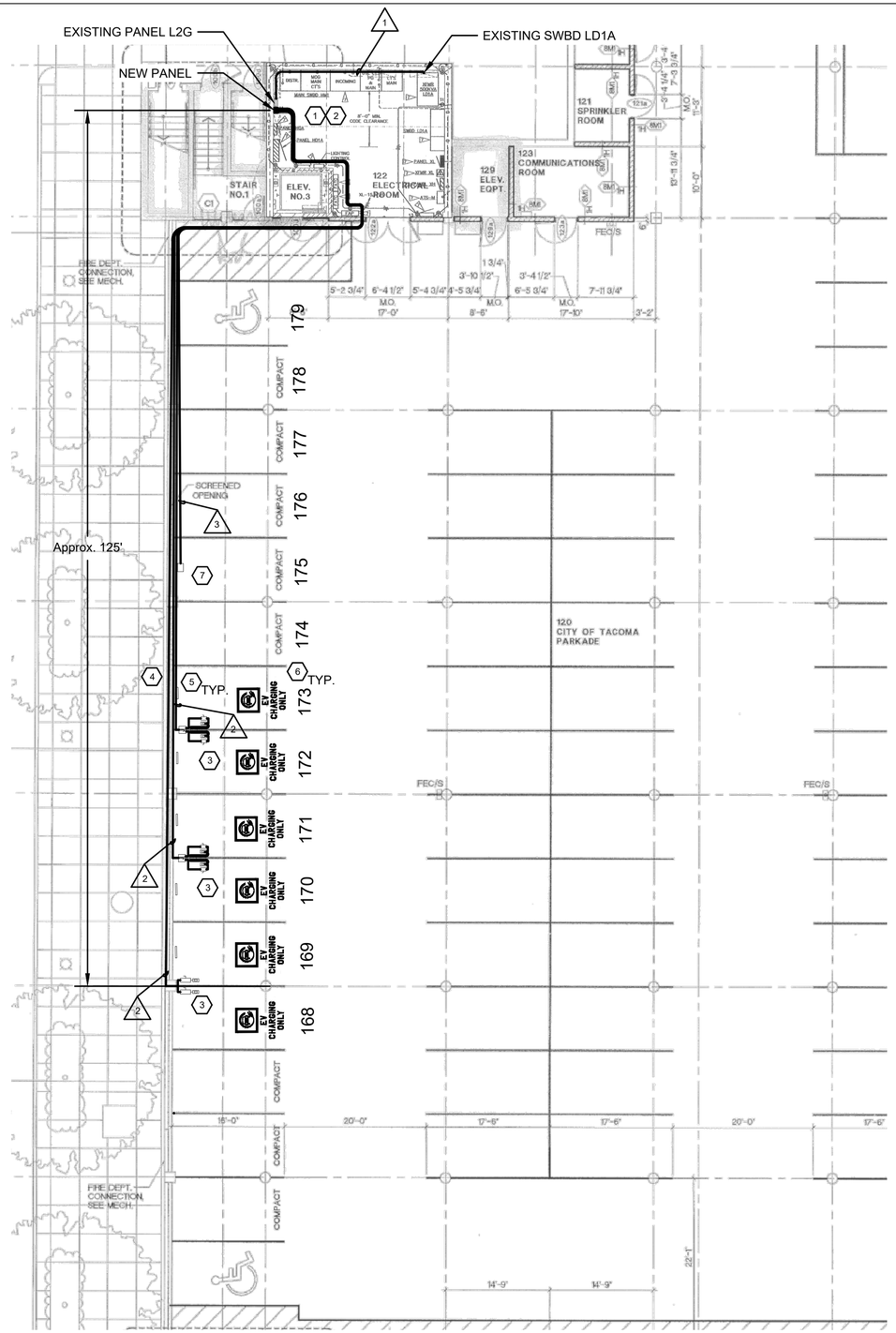

CONSTRUCTION NOTES

1. FURNISH AND INSTALL A NEW PANEL RATED 225A, MLO, 208Y/120V. PLACE IN VICINITY OF EXISTING PANEL L2G. SEE ONE LINE DIAGRAM FOR BREAKER SCHEDULE.
2. FEED NEW PANEL FROM 225A SPARE BREAKER IN SWITCHBOARD LD1A AS SHOWN.
3. INSTALL (6) SIX OWNER FURNISHED WALL-MOUNTED LEVEL-2 CHARGERS ON THE GROUND FLOOR ALONG GARAGE WALL ADJACENT TO DOCK STREET IN PARKING STALLS 168 TO 173 AS SHOWN PER DETAIL ON DRAWING EL8.
4. FURNISH AND INSTALL CONDUIT EXPOSED OVERHEAD IN GARAGE FROM MAIN ELECTRICAL ROOM TO EV CHARGERS.
5. FURNISH AND INSTALL EV CHARGING SIGNS PER DETAIL ON DRAWING EL10.
6. EV CHARGING PAVEMENT MARKINGS PER DETAIL ON DRAWING EL10 WILL BE PERFORMED BY OTHERS.
7. FURNISH AND INSTALL 12X12X4 NM NEMA 4 JUNCTION BOX FOR COMMUNICATION GATEWAY. LOCATE WITHIN 160' OF ALL CHARGING UNITS WHERE CELL SIGNAL IS STRONGEST. SEE DETAIL ON DRAWING EL8.
8. FURNISH AND INSTALL DISCONNECT FOR EACH CHARGER PER NEC.

WIRE NOTES

1. 2"C, 4-#4/0, #2G CU
2. 1.25"C, 4#4, #8G CU
3. 3/4"C, 2#12, #12G

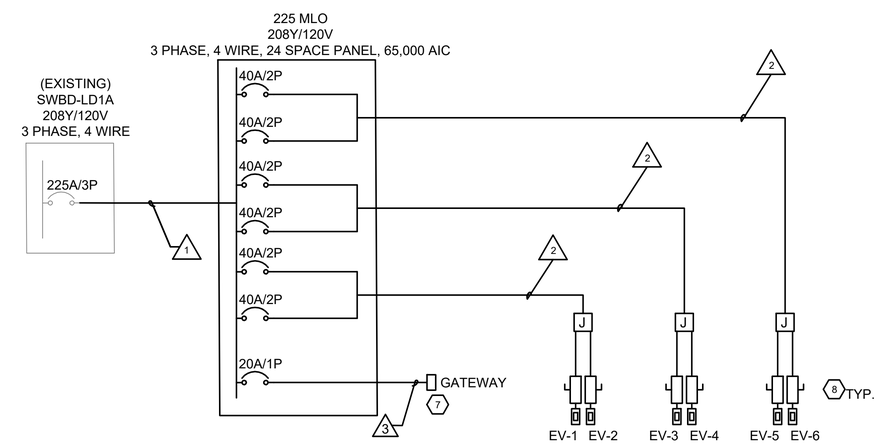

ONE-LINE DIAGRAM

NOT TO SCALE

TACOMA POWER | TACOMA WATER | TACOMA RAIL
TACOMA PUBLIC UTILITIES

concord ENGINEERING

NO	REVISION	DATE	APPD

FINAL CONSTRUCTION CHECKED	DATE 1/18/23	SCALE NTS
BY	DESIGNED NB	CHECKED XZ
DATE	DRAWN LS	PROJECT NAME
FIELD BOOKS	DRAWING NAME EL5	

XIAOPING ZHANG, STATE OF WASHINGTON, 10434, REGISTERED PROFESSIONAL ENGINEER
4/6/2023

TACOMA PUBLIC UTILITIES

DOWNTOWN TACOMA EVSE
MUSEUM OF GLASS GARAGE
1801 DOCK ST

SPEC. NO.
WBS NO.
SHEET NO. 6 OF 16

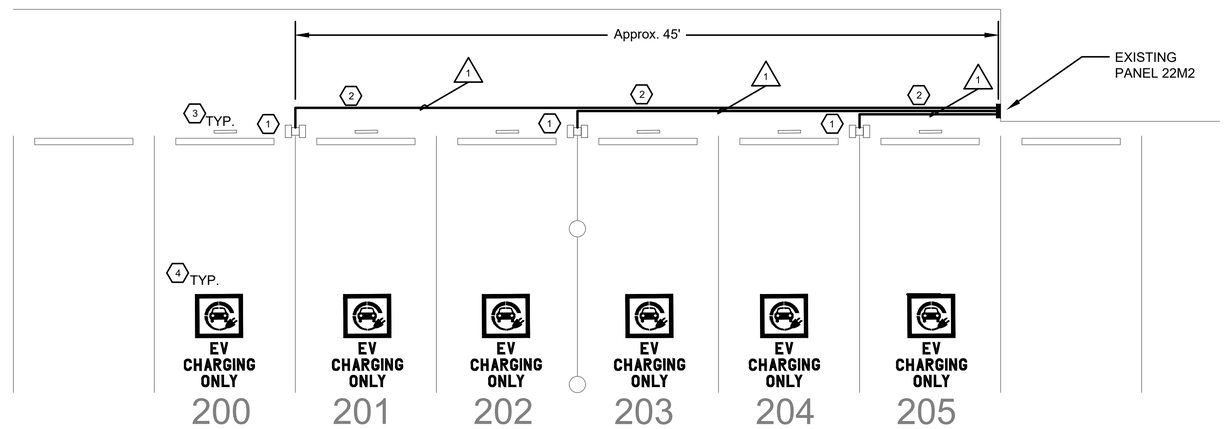

CONSTRUCTION NOTES

1. INSTALL (6) OWNER FURNISHED PEDESTAL-MOUNTED LEVEL-2 CHARGERS AS SHOWN PER DETAIL ON DRAWING EL13.
2. FURNISH AND INSTALL CONDUIT EXPOSED OVERHEAD IN GARAGE FROM PANEL 22M2 TO EV CHARGERS.
3. FURNISH AND INSTALL EV CHARGING SIGNS PER DETAIL ON DRAWING EL10.
4. EV CHARGING PAVEMENT MARKINGS PER DETAIL ON DRAWING EL10 WILL BE PERFORMED BY OTHERS.
5. FURNISH AND INSTALL 12X12X4 NM NEMA 4 JUNCTION BOX FOR COMMUNICATION GATEWAY. LOCATE WITHIN 160' OF ALL CHARGING UNITS WHERE CELL SIGNAL IS STRONGEST. SEE DETAIL ON DRAWING EL8.
6. DISCONNECT MEANS FOR EACH CHARGER IS TO BE FURNISHED BY THE OWNER, INSTALLED IN PEDESTAL. SEE DETAIL ON DRAWING EL13.

WIRE NOTES

1. 1.25"C, 4#8, #8G CU
2. 3/4"C, 2#12, #12G

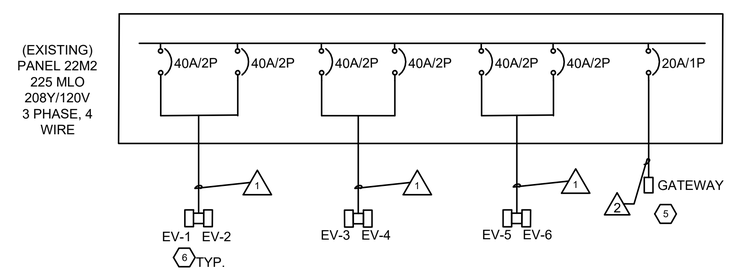

ONE-LINE DIAGRAM

NOT TO SCALE

TACOMA POWER | TACOMA WATER | TACOMA RAIL
TACOMA PUBLIC UTILITIES

concord ENGINEERING

NO	REVISION	DATE	APPD

FINAL CONSTRUCTION CHECKED	DATE 1/18/23	SCALE NTS
BY	DESIGNED NB	CHECKED XZ
DATE	DRAWN LS	PROJECT NAME
FIELD BOOKS	DRAWING NAME EL6	

XIAOPING ZHANG — STATE OF WASHINGTON — 40434 — REGISTERED PROFESSIONAL ENGINEER — 4/6/2023

TACOMA PUBLIC UTILITIES

DOWNTOWN TACOMA EVSE
CONVENTION CENTER GARAGE
1500 COMMERCE ST

SPEC. NO.
WBS NO.
SHEET NO. 7
SHEET OF 16

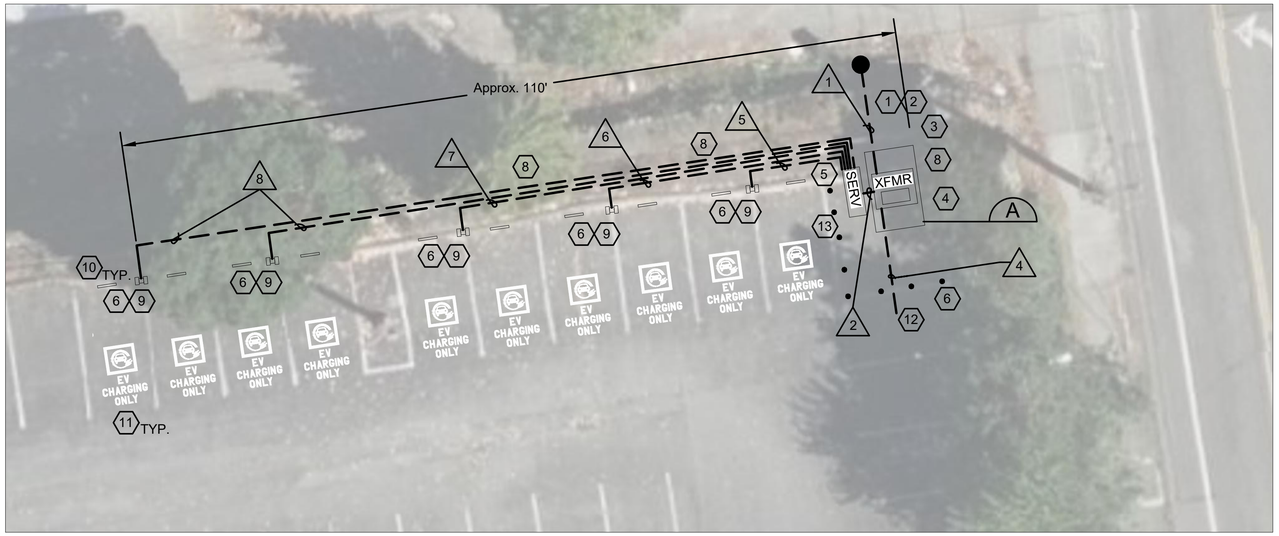

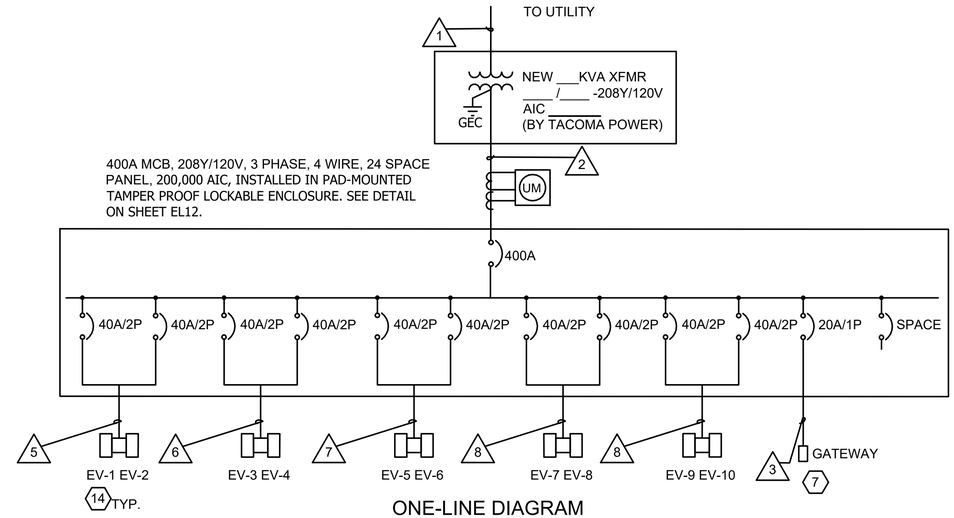

ONE-LINE DIAGRAM

NOT TO SCALE

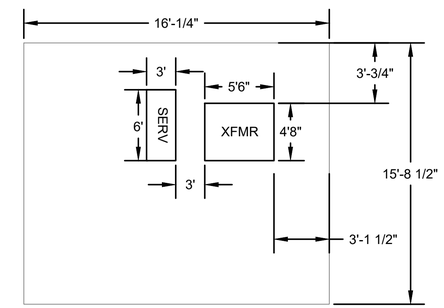

TRANSFORMER AND SERVICE CABINET LAYOUT

DETAIL A

NOT TO SCALE — EL7

CONSTRUCTION NOTES

1. TACOMA POWER TO FURNISH AND INSTALL POLES, MV-208Y/120V XFMR AND 3 PHASE AERIAL SERVICE CONDUCTORS TO THE NEW POLE.
2. FURNISH AND INSTALL TACOMA POWER RISER ON POLE PLACED ABOVE/BEHIND ROCK WALL PER TACOMA POWER STANDARD C-UG-1200. INSTALL UNDERGROUND CONDUIT TO XFMR VAULT.
3. COORDINATE FINAL INSTALLATION LOCATION WITH TACOMA POWER.
4. FURNISH AND INSTALL 5X5X4 XFMR VAULT PER TACOMA POWER STANDARD A-UG-1150, A-UG-1200, AND C-UG-1700. SEE DETAIL A FOR EQUIPMENT LAYOUT.
5. INSTALL OWNER FURNISHED SERVICE-RATED 400A, 208Y/120V, 3 PHASE, 24 SPACE SERVICE PANEL WITH 400A MAIN BREAKER, TACOMA POWER METER BASE, AND CURRENT TRANSFORMER. SEE DETAIL ON DRAWING EL13 AND THIS DRAWING FOR BREAKER SCHEDULE. REFERENCE TACOMA POWER STANDARD C-MR-0005 AND C-MR-0020 FOR METERING.
6. INSTALL PROTECTIVE BOLLARDS TO PROTECT XFMR, EV CHARGERS AND SERVICE CABINET PER TACOMA POWER STANDARD C-UG-1400. COORDINATE FINAL LOCATION WITH TPU INSPECTOR.
7. FURNISH AND INSTALL 12X12X4 NM NEMA 4 JUNCTION BOX FOR COMMUNICATION GATEWAY. LOCATE WITHIN 160' OF ALL CHARGERS WHERE CELL SIGNAL IS STRONGEST. SEE DETAIL ON DRAWING EL8.
8. RESTORE ALL AREAS TO ORIGINAL CONDITION TO INCLUDE, BUT NOT LIMITED TO LANDSCAPING, PAVEMENT, CONCRETE, BACKFILL, CURBING AND GUTTER.
9. INSTALL (10) TEN OWNER FURNISHED PEDESTAL-MOUNTED LEVEL 2 CHARGERS PER DETAIL ON DRAWING EL13, WITH EACH PEDESTAL POSITIONED IN FRONT AND BETWEEN TWO PARKING STALLS.
10. FURNISH AND INSTALL EV CHARGING SIGNS PER DETAIL ON DRAWING EL10.
11. EV CHARGING PAVEMENT MARKING PER DETAIL ON DRAWING EL10 BY OTHERS.
12. INSTALL STUBOUT SOUTH OF XFMR, APPROXIMATE LOCATION AS SHOWN. COORDINATE FINAL LOCATION WITH OWNER. INCORPORATE IN AS-BUILT DRAWINGS.
13. FURNISH AND INSTALL CONCRETE BASE AND GROUNDING UNDER SERVICE CABINET PER DETAIL ON DRAWING EL11 AND NEC.
14. DISCONNECT MEANS FOR EACH CHARGER IS TO BE FURNISHED BY THE OWNER, INSTALLED IN BASE OF PEDESTAL. SEE DETAIL ON DRAWING EL13.

WIRE NOTES

1. PER TACOMA POWER
2. (2) 4"PVC, 4-500 MCM, #2/0G
3. 3/4"C, 2#12, #12G
4. (2) 2" PVC CONDUIT STUB OUT
5. 1.25"PVC, 4#4, #8G CU
6. 1.5"PVC, 4#2, #8G CU
7. 2"PVC, 4-#1/0, #6G CU
8. 2"PVC, 4-#3/0, #4G CU

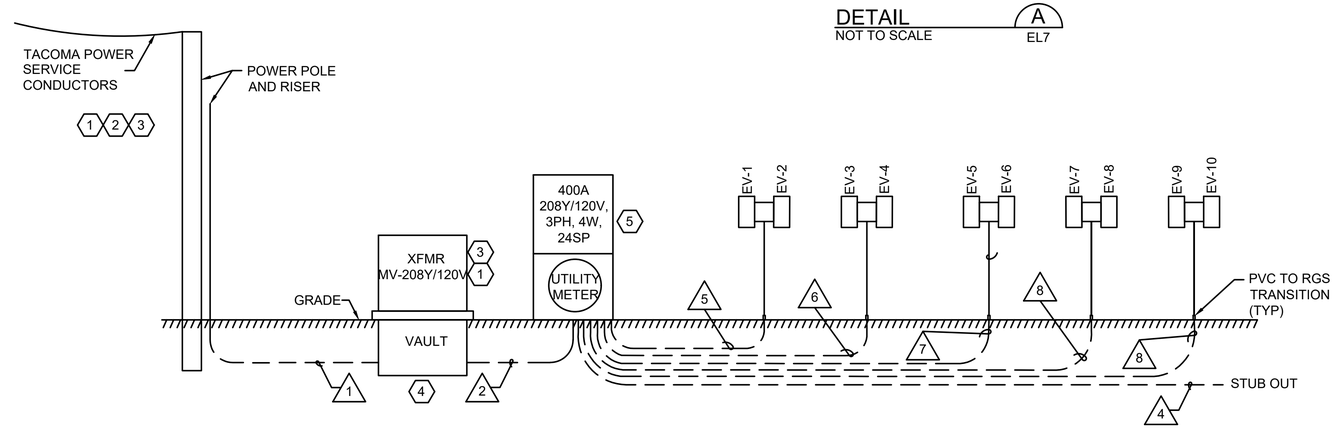

ELEVATION VIEW

NOT TO SCALE

TACOMA POWER | TACOMA WATER | TACOMA RAIL
TACOMA PUBLIC UTILITIES

concord ENGINEERING

NO	REVISION	DATE	APPD

FINAL CONSTRUCTION CHECKED	DATE 1/18/23	SCALE NTS
BY	DESIGNED NB	CHECKED XZ
DATE	DRAWN LS	PROJECT NAME
FIELD BOOKS	DRAWING NAME EL7	

XIAOPING ZHANG — STATE OF WASHINGTON — 40434 — REGISTERED PROFESSIONAL ENGINEER — 4/6/2023

TACOMA PUBLIC UTILITIES

DOWNTOWN TACOMA EVSE
TACOMA DOME, LOT A
2727 EAST D STREET

SPEC. NO.
WBS NO.
SHEET NO. 8 OF 16

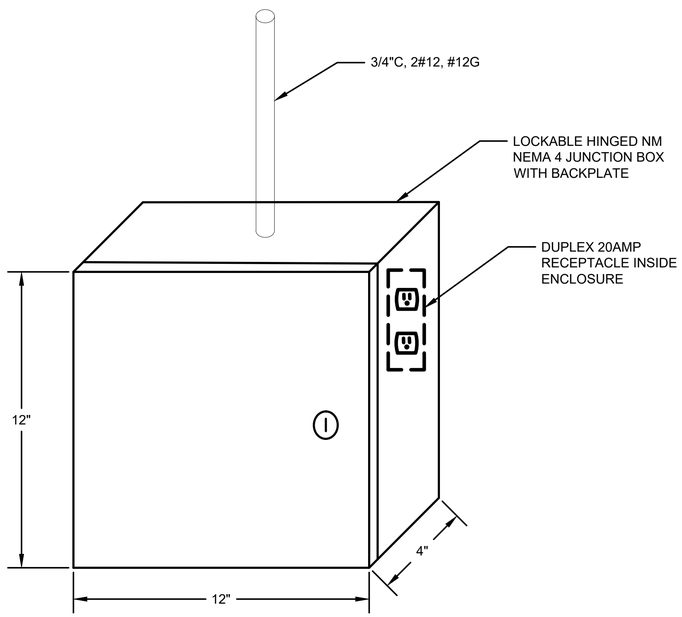

COMMUNICATION GATEWAY ENCLOSURE
NOT TO SCALE

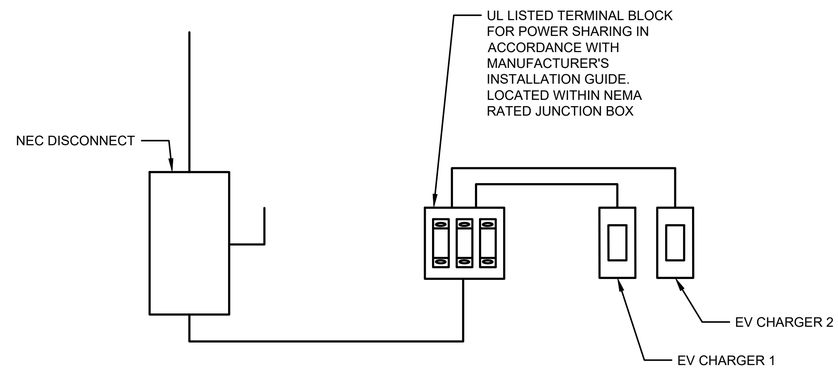

PARK PLAZA GARAGE POWER SHARING DIAGRAM
NOT TO SCALE

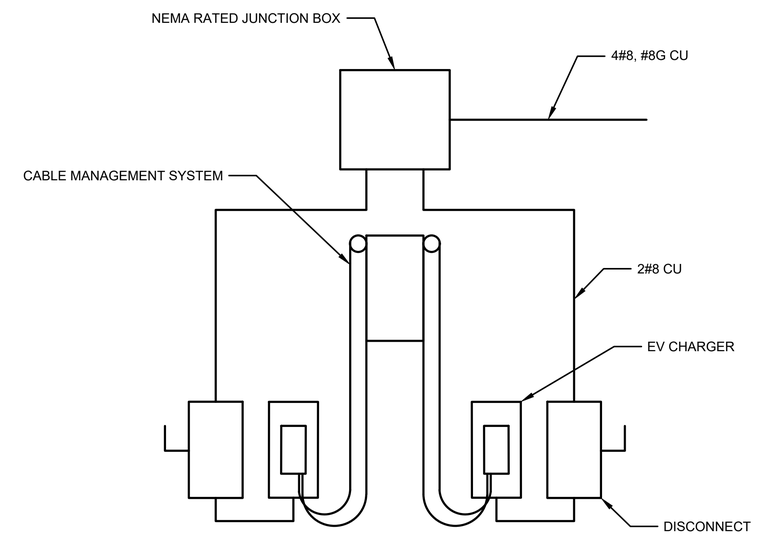

WALL MOUNT SCHEMATIC
NOT TO SCALE

TACOMA POWER | TACOMA WATER | TACOMA RAIL
TACOMA PUBLIC UTILITIES

concord ENGINEERING

NO	REVISION	DATE	APPD

FINAL CONSTRUCTION CHECKED	DATE 1/18/23	SCALE NTS
BY	DESIGNED NB	CHECKED XZ
DATE	DRAWN LS	PROJECT NAME
FIELD BOOKS	DRAWING NAME EL8	

XIAOPING ZHANG, STATE OF WASHINGTON, REGISTERED PROFESSIONAL ENGINEER 40434
4/6/2023

TACOMA PUBLIC UTILITIES

DOWNTOWN TACOMA EVSE
WALL/PEDESTAL MOUNTED EV CHARGER DETAILS

SPEC. NO.
WBS NO.
SHEET NO. 9 OF 16

CONSTRUCTION NOTES

1. INSTALL CHARGER, POWER CONNECTIONS AND GROUND IN ACCORDANCE WITH MANUFACTURER'S SPECIFICATIONS AND INSTALLATION GUIDE.
2. CONSTRUCT CONCRETE FOUNDATION PER WSDOT STANDARD J-10.10-04 AND AS SHOWN.
3. DISCONNECT TO BE LOCKABLE IN BOTH THE OPEN AND CLOSED POSITION.
4. SEE ONE-LINE AND ELEVATIONS DRAWINGS FOR CONDUIT AND CABLING INFORMATION.
5. CABLE MANAGEMENT SYSTEM ATTACHED TO SIDE OF CHARGER.

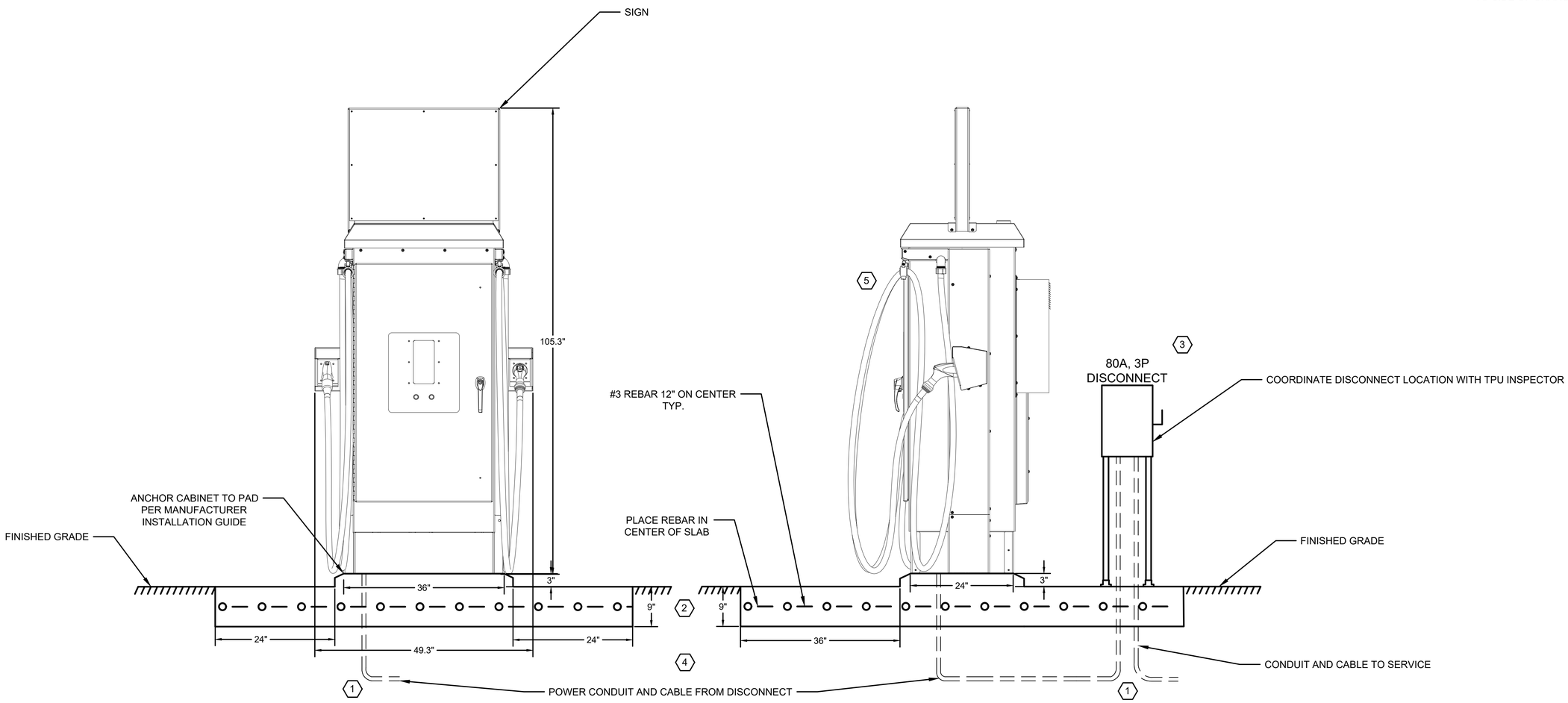

TACOMA POWER | TACOMA WATER | TACOMA RAIL
TACOMA PUBLIC UTILITIES

concord ENGINEERING

NO	REVISION	DATE	APPD

FINAL CONSTRUCTION CHECKED	DATE 1/18/23	SCALE NTS
BY	DESIGNED NB	CHECKED XZ
DATE	DRAWN LS	PROJECT NAME
FIELD BOOKS	DRAWING NAME EL9	

XIAOPING ZHANG, STATE OF WASHINGTON, 22021215PE01, PROFESSIONAL ENGINEER
4/6/2023

TACOMA PUBLIC UTILITIES

DOWNTOWN TACOMA EVSE
SMART DC CHARGER AND DISCONNECT DETAILS

SPEC. NO.
WBS NO.
SHEET NO. 10 OF 16

NOTES

THE FOLLOWING INSTRUCTIONS ARE FOR REFERENCE ONLY. PAVEMENT MARKING WILL BE PERFORMED BY OTHERS.

PROVIDE 4.5" SPACING BETWEEN STENCILS.

LOCATION: CENTER AT FOOT OF PARKING STALL

FONT: STANDARD GOTHIC

COLOR: GREEN ON EXISTING SURFACE (NO FILL INSIDE STENCIL)

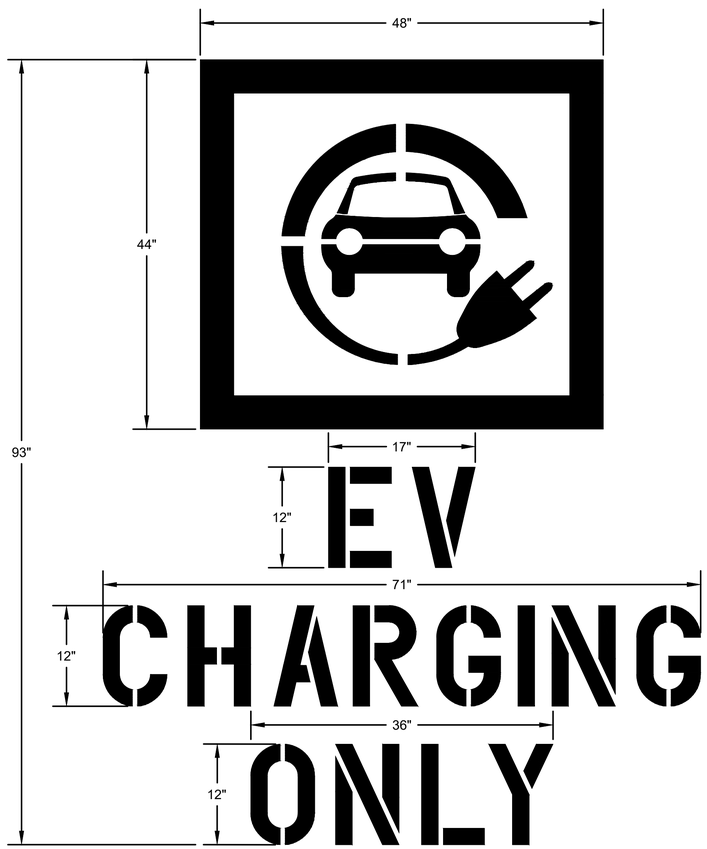

EVSE PAVEMENT MARKING

SCALE: NOT TO SCALE

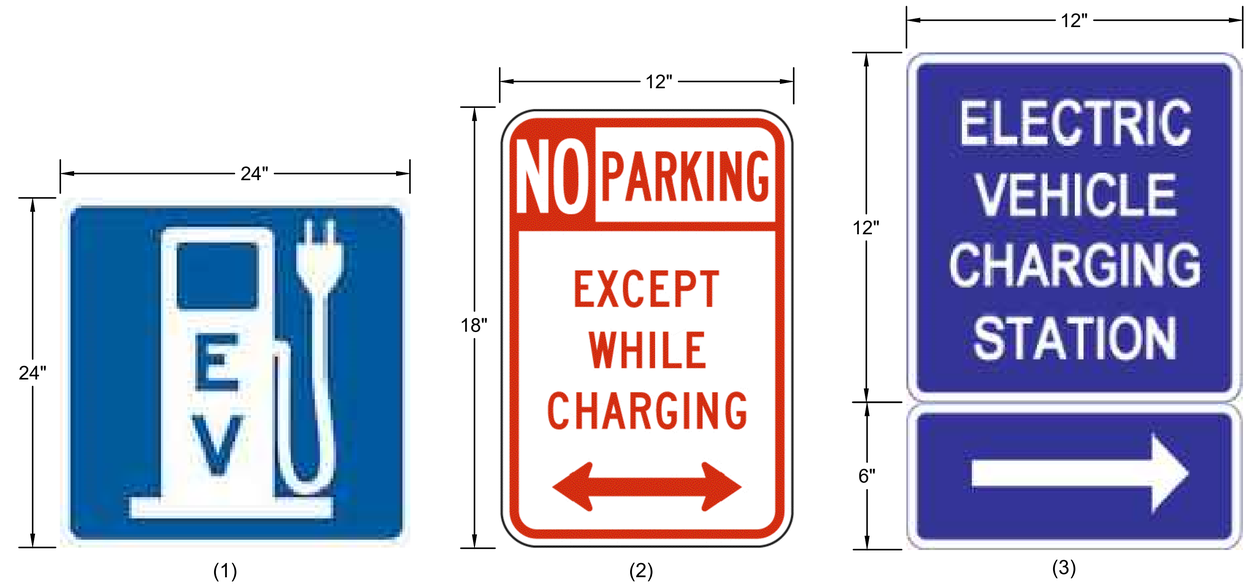

NOTES

FURNISH AND INSTALL SIGNING. COORDINATE WITH FIELD INSPECTOR AND TACOMA POWER SIGNING DEPARTMENT.

SIGNS (1) AND (2) ARE TO BE PLACED TO IDENTIFY EV CHARGING PARKING SPACE.

SIGN (3) IS TO BE PLACED TO SHOW THE DIRECTION OF CHARGING STATION(S).

FURNISH AND INSTALL SIGNING ADJACENT TO EACH PARKING STALL SERVED BY AN EV CHARGER. MOUNT ON APPROPRIATE WALL OR INSTALL ON 4X4 TREATED WOOD POST WHERE WALL MOUNTING IS NOT SUITABLE. COORDINATE EXACT LOCATIONS WITH CITY OF TACOMA SITE REPRESENTATIVE.

EVSE PARKING SIGNAGE

SCALE: NOT TO SCALE

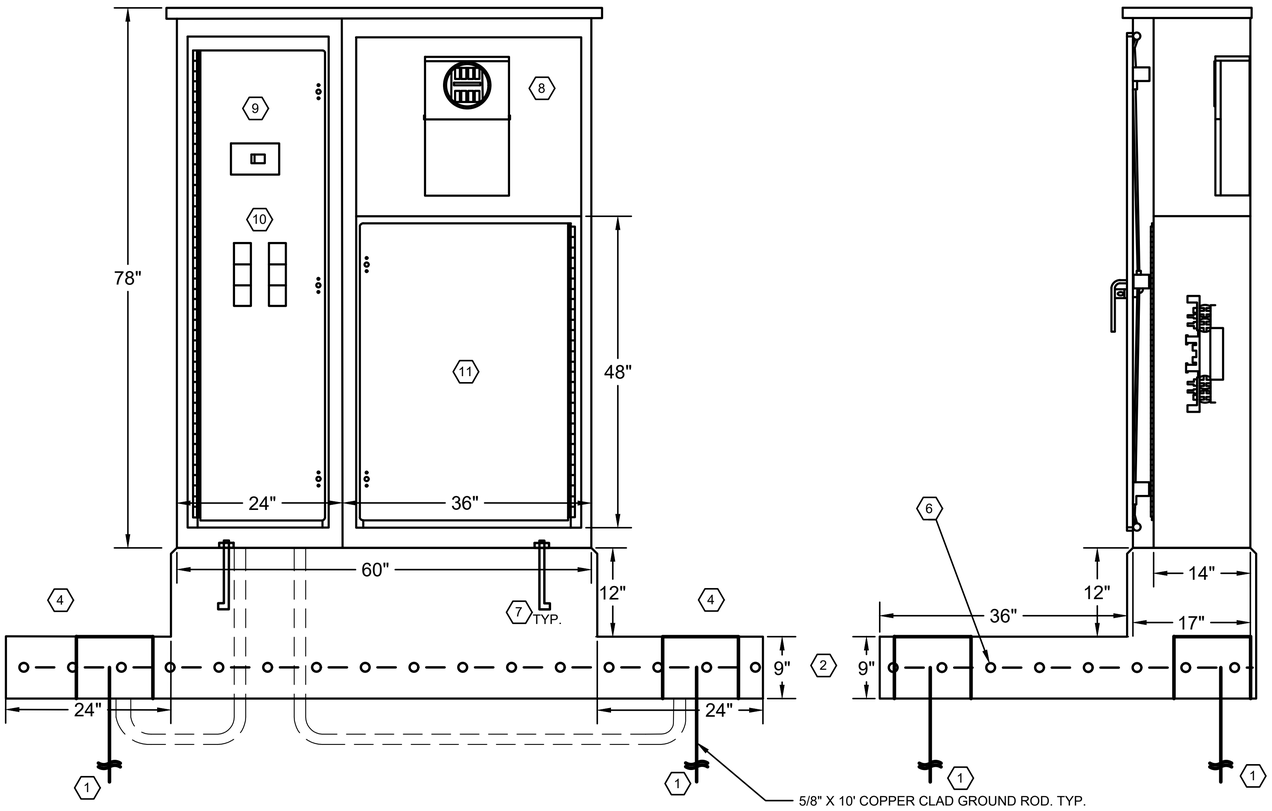

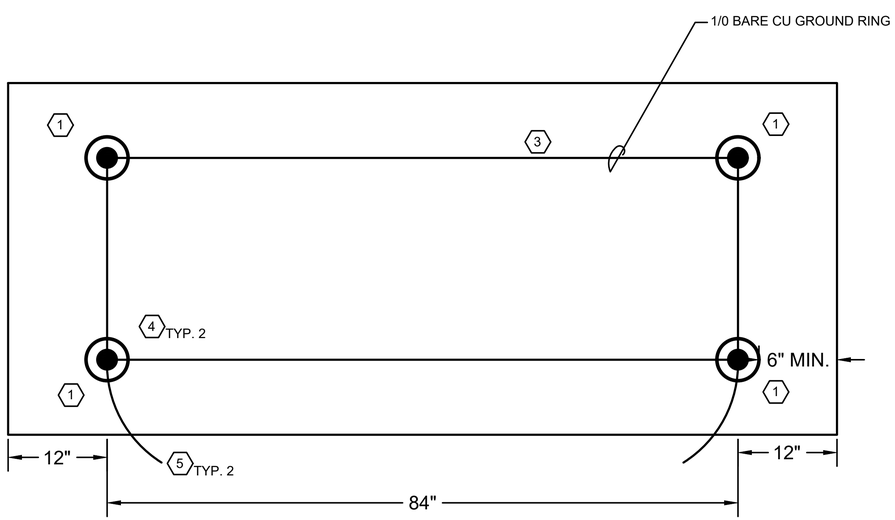

CONSTRUCTION NOTES

1. FURNISH AND INSTALL 5/8" X 10' COPPER CLAD GROUND ROD IN ALL 4 CORNERS OF THE FOUNDATION.
2. CONSTRUCT CONCRETE SERVICE FOUNDATION IN ACCORDANCE WITH WSDOT STANDARD J-10.10-04
3. FURNISH AND INSTALL CONTINUOUS BARE COPPER CONDUCTOR GROUND RING 6" INSIDE THE EDGE OF THE CONCRETE FOUNDATION, BURIED 12" BELOW THE BOTTOM OF THE CONCRETE FOUNDATION, IN FULL CONTACT WITH NATIVE SOIL MATERIAL AND CONNECTED TO ALL GROUND RODS USING APPROVED NEC COMPLIANT CONNECTORS.
4. FURNISH AND INSTALL ACCESSIBLE GROUND WELL AT EACH GROUND ROD.
5. EXTEND BARE COPPER GROUND TAIL FROM TWO GROUND RODS TO THE SERVICE CABINET GROUND TERMINAL. PROTECT COPPER CONDUCTOR THROUGH CONCRETE BY INSTALLING IN CONDUIT.
6. #3 REBAR 12" ON CENTER, PLACE REBAR MAT IN THE CENTER OF CONCRETE PAD PER WSDOT STANDARD J-10.10-04
7. ANCHOR SERVICE CABINET TO CONCRETE FOUNDATION PER WSDOT STANDARD J-10.10-04
8. INTERNAL UTILITY POWER METER
9. MAIN BREAKER
10. LOCKABLE DISTRIBUTION CIRCUIT BREAKERS SEE ONE LINE FOR INFORMATION.
11. UTILITY TERMINATION CT SECTION PER TACOMA POWER REQUIREMENTS

TACOMA POWER | TACOMA WATER | TACOMA RAIL
TACOMA PUBLIC UTILITIES

concord ENGINEERING

NO	REVISION	DATE	APPD

FINAL CONSTRUCTION CHECKED	DATE 1/18/23	SCALE NTS
BY	DESIGNED NB	CHECKED XZ
DATE	DRAWN LS	PROJECT NAME
FIELD BOOKS	DRAWING NAME EL11	

XIAOPING ZHANG, STATE OF WASHINGTON, 10434, REGISTERED PROFESSIONAL ENGINEER
4/6/2023

TACOMA PUBLIC UTILITIES

DOWNTOWN TACOMA EVSE
SERVICE FOUNDATION AND GROUNDING DETAILS

SPEC. NO.
WBS NO.
SHEET NO. 12
SHEET 12 OF 16

GENERAL NOTES

1. DESIGN SHOWN IS BASED ON SKYLINE MANUFACTURING - SERIES 67850. MANUFACTURER'S NAMES AND MODELS ARE PROVIDED AS A POINT OF REFERENCE FOR A STANDARD, QUALITY AND FUNCTIONALITY AND ARE NOT INTENDED TO IMPLY SOURCING OF THE PRODUCT OR SERVICE PANEL. THE SERVICE PANEL MUST MEET OR EXCEED ALL THE CHARACTERISTICS SHOWN.
2. CIRCUIT BREAKERS SHALL COMPLY WITH WSDOT 2023 STANDARD SPECIFICATION 9-29.24 AND SERVICE ENCLOSURE SHALL COMPLY WITH SECTION 9-29.25.
3. SERVICE CABINET IS FURNISHED BY CITY OF TACOMA.

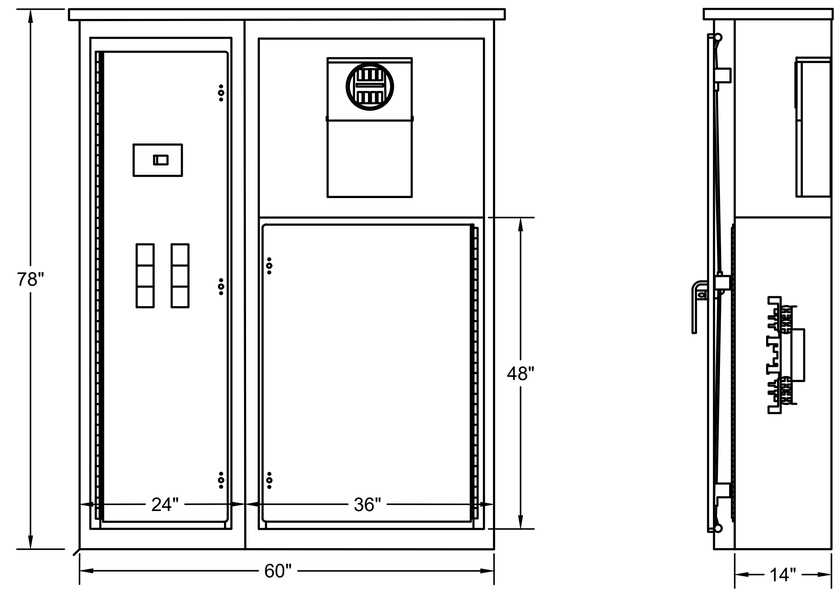

277/480V PANEL

COMPONENT SCHEDULE

1. 400A, 3Ø, 4W, CT LANDING PAD, B-LINE 6067HAL
2. 13 JAW CT RATED METER BASE, B-LINE 121413
3. PANELBOARD:
   277/480V, 400A COPPER BUS, 3Ø, 4W, 24CKT, 200KAIC RATED
   MAIN BREAKER: 600A FRAME, 400A TRIP, 3 POLE, EATON PDG33F0400FTAJ
   BOLT ON BRANCH BREAKERS (QUANTITY PER PANEL SCHEDULES ON SHEETS EL14 AND EL15):
   100A FRAME, 80A TRIP, EATON GHB3080
   LOCKOUT ACCESSORY (QUANTITY PER PANEL SCHEDULES ON SHEETS EL14 AND EL15):
   EATON GPLKOFF

CABINET NOTES

- NEMA TYPE 3R OUTDOOR PADMOUNT
- #12 GA PRE-GALV STEEL CONSTRUCTION
- OPEN BOTTOM FRAMED WITH 2" ANGLE
- TOP AND BOTTOM SCREENED AND GASKETED VENTS
- DOORS: HEAVY-DUTY CONCEALED HINGES (LIFT-OFF TYPE), PADLOCKABLE STAINLESS STEEL VAULT HANDLES WITH ROLLER RODS THAT PROVIDE 3-POINT COMPRESSION ON CLOSED CELL NEOPRENE GASKET
- CT SECTION: METERBASE AND DEAD-FRONTED CT LANDING PAD
- DEAD-FRONTED DISTRIBUTION SECTION
- FINISH: ASA61 GREY POLYESTER POWERED COAT FINISH OVER ZINC PRIMER. EQUIPMENT MOUNTING PAN WHITE.
- UL 508A ENCLOSED INDUSTRIAL CONTROL PANEL

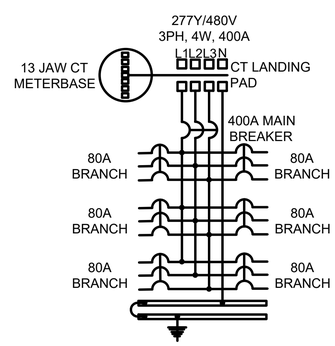

120/208V PANEL

COMPONENT SCHEDULE

1. 400A, 3Ø, 4W, CT LANDING PAD, B-LINE 6067HAL
2. 13 JAW CT RATED METER BASE, B-LINE 121413
3. PANELBOARD:
   120/208V, 400A COPPER BUS, 3Ø, 4W, 24CKT, 200KAIC SERIES RATED
   MAIN BREAKER: 600A FRAME, 400A TRIP, 3 POLE, EATON PDG33F0400FTAJ
   BOLT ON BRANCH BREAKERS (QUANTITY PER PANEL SCHEDULES ON SHEETS EL14 AND EL15):
   100A FRAME, 40A TRIP, 2 POLE, EATON BAB2040
   100A FRAME, 20A TRIP, 1 POLE, EATON BAB1020
   LOCKOUT ACCESSORY (QUANTITY PER PANEL SCHEDULES ON SHEETS EL14 AND EL15):
   EATON QL123EL

CABINET NOTES

- NEMA TYPE 3R OUTDOOR PADMOUNT
- #12 GA PRE-GALV STEEL CONSTRUCTION
- OPEN BOTTOM FRAMED WITH 2" ANGLE
- TOP AND BOTTOM SCREENED AND GASKETED VENTS
- DOORS: HEAVY-DUTY CONCEALED HINGES (LIFT-OFF TYPE), PADLOCKABLE STAINLESS STEEL VAULT HANDLES WITH ROLLER RODS THAT PROVIDE 3-POINT COMPRESSION ON CLOSED CELL NEOPRENE GASKET
- CT SECTION: METERBASE AND DEAD-FRONTED CT LANDING PAD
- DEAD-FRONTED DISTRIBUTION SECTION
- FINISH: ASA61 GREY POLYESTER POWERED COAT FINISH OVER ZINC PRIMER. EQUIPMENT MOUNTING PAN WHITE.
- UL 508A ENCLOSED INDUSTRIAL CONTROL PANEL

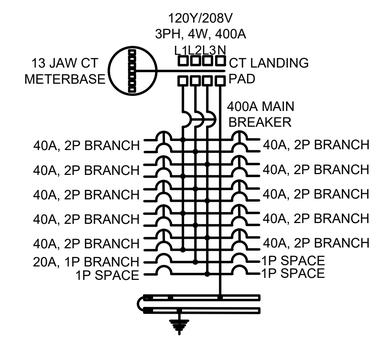

TACOMA POWER | TACOMA WATER | TACOMA RAIL
TACOMA PUBLIC UTILITIES

concord ENGINEERING

NO	REVISION	DATE	APPD

FINAL CONSTRUCTION CHECKED	DATE 1/18/23	SCALE NTS
BY	DESIGNED NB	CHECKED XZ
DATE	DRAWN LS	PROJECT NAME
FIELD BOOKS	DRAWING NAME EL12	

HAOPING ZHANG, STATE OF WASHINGTON, 40434, REGISTERED PROFESSIONAL ENGINEER
4/6/2023

TACOMA PUBLIC UTILITIES

DOWNTOWN TACOMA EVSE
480V AND 208V 3PH SERVICE CABINET DETAILS

SPEC. NO.
WBS NO.
SHEET NO. 13
SHEET 13 OF 16

NOTE
SEE MANUFACTURER INSTALLATION GUIDE FOR INSTALLATION DETAILS.

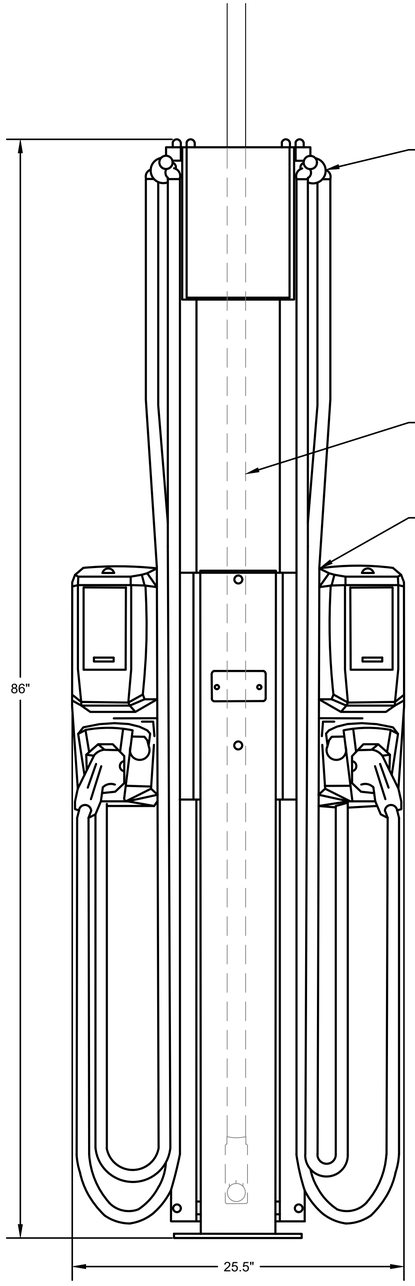

FRONT VIEW

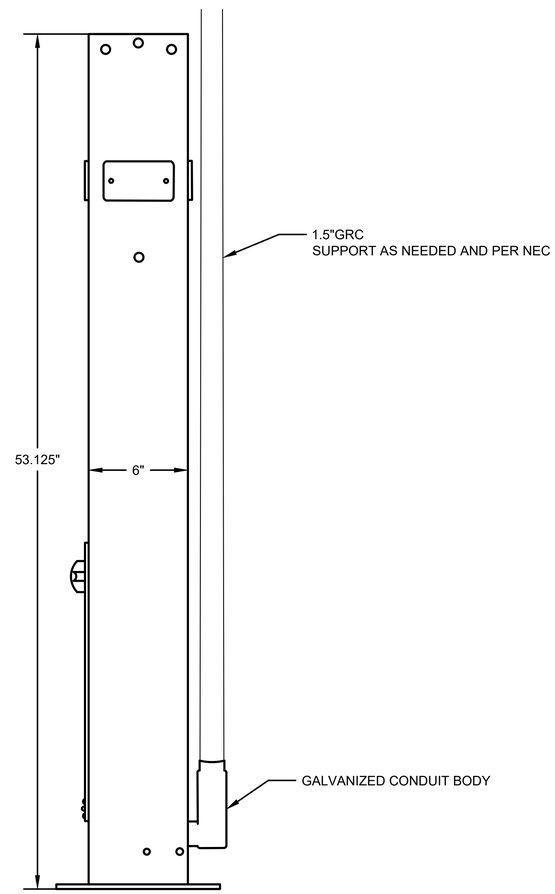

SIDE VIEW

PEDESTAL WITH SURFACE MOUNT CONDUIT
NOT TO SCALE

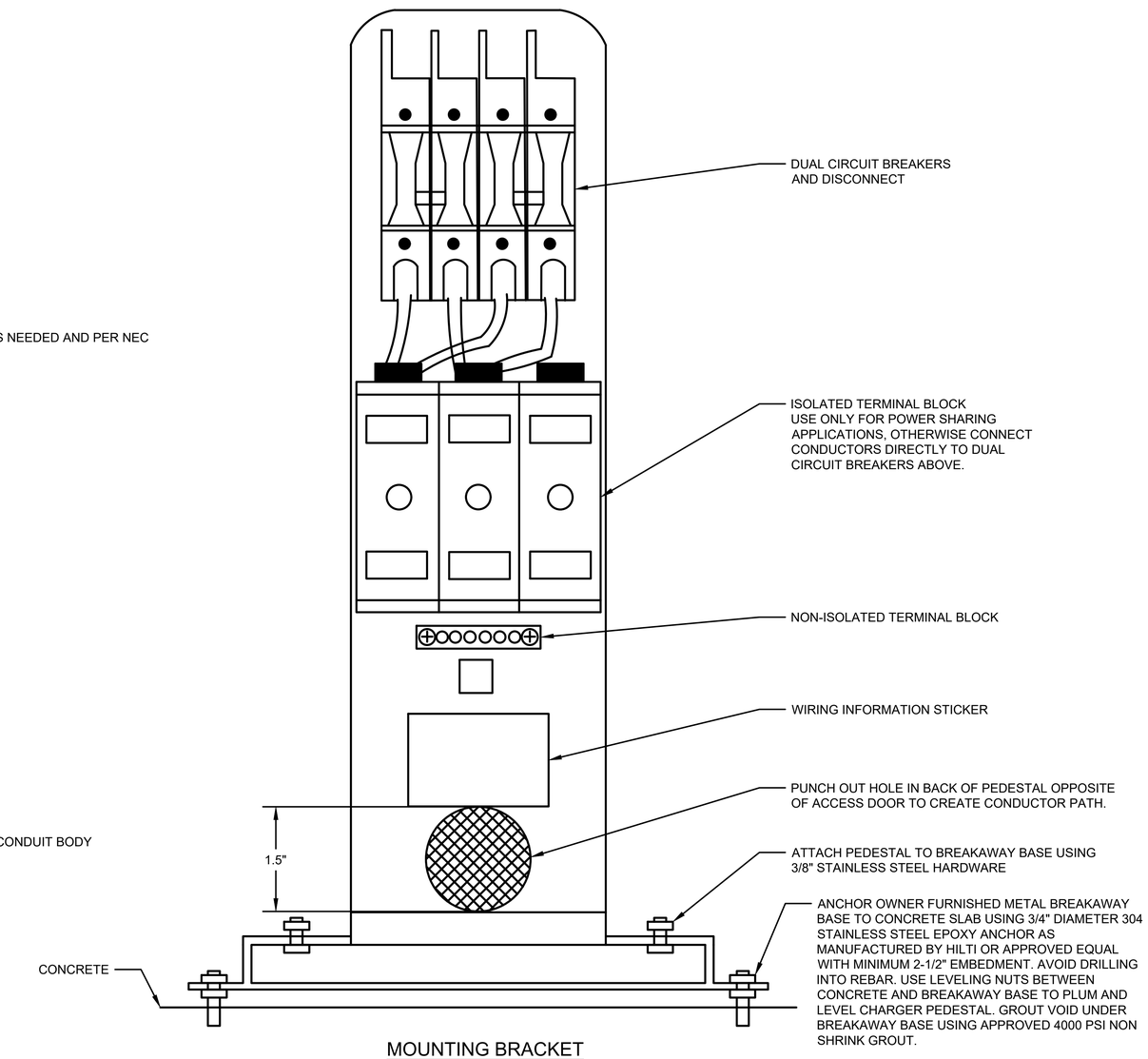

MOUNTING BRACKET
NOT TO SCALE

TACOMA POWER | TACOMA WATER | TACOMA RAIL
TACOMA PUBLIC UTILITIES

concord ENGINEERING

NO	REVISION	DATE	APPD

FINAL CONSTRUCTION CHECKED	DATE 1/18/23	SCALE NTS
BY	DESIGNED NB	CHECKED XZ
DATE	DRAWN LS	PROJECT NAME
FIELD BOOKS	DRAWING NAME EL13	

XIAOPING ZHANG — STATE OF WASHINGTON — 40434 — REGISTERED PROFESSIONAL ENGINEER
4/6/2023

TACOMA PUBLIC UTILITIES

DOWNTOWN TACOMA EVSE
PEDESTAL INSTALLATION DETAILS

SPEC. NO.
WBS NO.
SHEET NO. 14 OF 16

New Panel	LOCATION: 728 MARKET ST (MUNICIPAL PARKING LOT)								480Y/277 VOLT 3 PHASE 4 WIRE				
	SERVING: EV CHARGERS								200,000 AIC 400 AMP MAIN LUGS				
CKT	LOAD DESCRIPTION	TYPE	KVA	A/P	PHASE			A/P	KVA	TYPE	LOAD DESCRIPTION		CKT
1	CAR CHARGING STATION #1	D	54.000	80/3	A								2
3						B							4
5							C						6
7	CAR CHARGING STATION #2	D	54.000	80/3	A								8
9						B							10
11							C						12
13													14
15													16
17													18
PHASE LOAD PHASE A = 36.00 KVA, PHASE B = 36.00 KVA, PHASE C = 36.00 KVA													
LOAD TYPE	L	R	M	H	WH			D	A	K	LM	TOTAL LOADS	
CONN. LOAD								108.00				108.00 KVA	129.91 AMP
NET CALC LOAD								108.00				108.00 KVA	129.91 AMP

NEW PANEL SCHEDULE

NEW PANEL ENCLOSED IN SERVICE CABINET. FURNISHED BY CITY OF TACOMA

New Panel	LOCATION: 110 SOUTH 10TH ST (TACOMA PARKING GARAGE)								208Y/120 VOLT 3 PHASE 4 WIRE				
	SERVING: EV CHARGERS								65,000 AIC 200 AMP MAIN LUGS				
CKT	LOAD DESCRIPTION	TYPE	KVA	A/P	PHASE			A/P	KVA	TYPE	LOAD DESCRIPTION		CKT
1	CAR CHARGING STATION #1	D	7.200	40/2	A		A	20/1	1.000	D	COMMUNICATION GATEWAY		2
3						B							4
5	CAR CHARGING STATION #2	D	7.200	40/2			C						6
7					A								8
9													10
11													12
13													14
15													16
17													18
19													20
21													22
23													24
PHASE LOAD PHASE A = 7.20 KVA, PHASE B = 3.60 KVA, PHASE C = 3.60 KVA													
LOAD TYPE	L	R	M	H	WH			D	A	K	LM	TOTAL LOADS	
CONN. LOAD								15.40				14.40 KVA	39.98 AMP
NET CALC LOAD								15.40				14.40 KVA	39.98 AMP

NEW PANEL SCHEDULE

Panel 5A	LOCATION: 923 COMMERCE ST (PARK PLAZA GARAGE FIFTH LEVEL)								208Y/120 VOLT 3 PHASE 4 WIRE				
	SERVING: NORTH PARKING								22,000 AIC 225 AMP MAIN LUGS				
CKT	LOAD DESCRIPTION	TYPE	KVA	A/P	PHASE			A/P	KVA	TYPE	LOAD DESCRIPTION		CKT
1	EXISTING CAR CHARGING STATION #1	D	7.200	40/2	A			80/2	13.400	D	CAR CHARGING STATION #7 AND #8		2
3						B							4
5	EXISTING CAR CHARGING STATION #2	D	7.200	40/2			C	80/2	13.400	D	CAR CHARGING STATION #9 AND #10		6
7					A								8
9	EXISTING CAR CHARGING STATION #3	D	7.200	40/2		B		20/2	1.000	D	COMMUNICATION GATEWAY		10
11							C						12
13	EXISTING CAR CHARGING STATION #4	D	7.200	40/2	A								14
15						B							16
17	CAR CHARGING STATION #5 AND #6	D	13.400	80/2			C						18
19					A								20
PHASE LOAD PHASE A = 30.90 KVA, PHASE B = 18.00 KVA, PHASE C = 21.10 KVA													
LOAD TYPE	L	R	M	H	WH			D	A	K	LM	TOTAL LOADS	
CONN. LOAD								70.00				70.00 KVA	194.31 AMP
NET CALC LOAD								70.00				70.00 KVA	194.31 AMP

EXISTING PANEL SCHEDULE 5A

New Panel	LOCATION: 1401 PACIFIC AVENUE (14TH ST LOT)								480Y/277 VOLT 3 PHASE 4 WIRE				
	SERVING: EV CHARGERS								200,000 AIC 400 AMP MAIN LUGS				
CKT	LOAD DESCRIPTION	TYPE	KVA	A/P	PHASE			A/P	KVA	TYPE	LOAD DESCRIPTION		CKT
1	CAR CHARGING STATION #1	D	54.000	80/3	A								2
3						B							4
5							C						6
7	CAR CHARGING STATION #2	D	54.000	80/3	A								8
9						B							10
11							C						12
13													14
15													16
17													18
PHASE LOAD PHASE A = 36.00 KVA, PHASE B = 36.00 KVA, PHASE C = 36.00 KVA													
LOAD TYPE	L	R	M	H	WH			D	A	K	LM	TOTAL LOADS	
CONN. LOAD								108.00				108.00 KVA	129.91 AMP
NET CALC LOAD								108.00				108.00 KVA	129.91 AMP

NEW PANEL SCHEDULE

NEW PANEL ENCLOSED IN SERVICE CABINET. FURNISHED BY CITY OF TACOMA

TACOMA POWER | TACOMA WATER | TACOMA RAIL
TACOMA PUBLIC UTILITIES

concord ENGINEERING

NO	REVISION	DATE	APPD

FINAL CONSTRUCTION CHECKED
BY
DATE
FIELD BOOKS

DATE 1/18/23 | SCALE NTS
DESIGNED NB | CHECKED XPZ
DRAWN LS | PROJECT NAME
DRAWING NAME EL14

HAOPING ZHANG — STATE OF WASHINGTON — 20140434 — REGISTERED PROFESSIONAL ENGINEER — 4/6/2023

TACOMA PUBLIC UTILITIES

DOWNTOWN TACOMA EVSE
PANEL SCHEDULES
1 OF 2

SPEC. NO.
WBS NO.
SHEET NO. 15 OF 16

New Panel	LOCATION: 1801 DOCK ST (MUSEUM OF GLASS)							208Y/120 VOLT 3 PHASE 4 WIRE				
	SERVING: EV CHARGERS							65,000 AIC 225 AMP MAIN LUGS				
CKT	LOAD DESCRIPTION	TYPE	KVA	A/P	PHASE			A/P	KVA	TYPE	LOAD DESCRIPTION	CKT
1	CAR CHARGING STATION #1	D	7.200	40/2	A			40/2	7.200	D	CAR CHARGING STATION #4	2
3						B						4
5	CAR CHARGING STATION #2	D	7.200	40/2			C	40/2	7.200	D	CAR CHARGING STATION #5	6
7					A							8
9	CAR CHARGING STATION #3	D	7.200	40/2		B		40/2	7.200	D	CAR CHARGING STATION #6	10
11							C					12
13	COMMUNICATION GATEWAY	D	1.000	20/2	A							14
15						B						16
17							C					18
19					A							20
21						B						22
23							C					24
PHASE LOAD PHASE A = 14.90 KVA, PHASE B = 14.90 KVA, PHASE C = 14.40 KVA												

LOAD TYPE	L	R	M	H	WH		D	A	K	LM		TOTAL LOADS
CONN. LOAD							44.20				44.20 KVA	122.70 AMP
NET CALC LOAD							44.20				44.20 KVA	122.70 AMP

NEW PANEL SCHEDULE

Panel 22M2	LOCATION: CONVENTION CENTER GARAGE							208Y/120 VOLT 3 PHASE 4 WIRE				
	SERVING: EV CHARGERS							_____ AIC 225 AMP MAIN LUGS				
CKT	LOAD DESCRIPTION	TYPE	KVA	A/P	PHASE			A/P	KVA	TYPE	LOAD DESCRIPTION	CKT
1	CAR CHARGING STATION #1	D	7.200	40/2	A			40/2	7.200	D	CAR CHARGING STATION #4	2
3						B						4
5	CAR CHARGING STATION #2	D	7.200	40/2			C	40/2	7.200	D	CAR CHARGING STATION #5	6
7					A							8
9	CAR CHARGING STATION #3	D	7.200	40/2		B		40/2	7.200	D	CAR CHARGING STATION #6	10
11							C					12
13	COMMUNICATION GATEWAY	D	1.000	20/2	A							14
15						B						16
17							C					18
19					A							20
21						B						22
23							C					24
PHASE LOAD PHASE A = 14.90, PHASE B = 14.90, PHASE C = 14.40												

LOAD TYPE	L	R	M	H	WH		D	A	K	LM		TOTAL LOADS
CONN. LOAD							44.20				44.20 KVA	122.70 A
NET CALC LOAD							44.20				44.20 KVA	122.70 A

EXISTING PANEL SCHEDULE 22M2

New Panel	LOCATION: 2727 EAST D STREET (TACOMA DOME LOT A)							208Y/120 VOLT 3 PHASE 4 WIRE				
	SERVING: EV CHARGERS							200,000 AIC 400 AMP MAIN LUGS				
CKT	LOAD DESCRIPTION	TYPE	KVA	A/P	PHASE			A/P	KVA	TYPE	LOAD DESCRIPTION	CKT
1	CAR CHARGING STATION #1	D	7.200	40/2	A			40/2	7.200	D	CAR CHARGING STATION #6	2
3						B						4
5	CAR CHARGING STATION #2	D	7.200	40/2			C	40/2	7.200	D	CAR CHARGING STATION #7	6
7					A							8
9	CAR CHARGING STATION #3	D	7.200	40/2		B		40/2	7.200	D	CAR CHARGING STATION #8	10
11							C					12
13	CAR CHARGING STATION #4	D	7.200	40/2	A			40/2	7.200	D	CAR CHARGING STATION #9	14
15						B						16
17	CAR CHARGING STATION #5	D	7.200	40/2			C	40/2	7.200	D	CAR CHARGING STATION #10	18
19					A							20
21	COMMUNICATION GATEWAY	D	1.000	20/2		B						22
23							C					24
PHASE LOAD PHASE A = 28.80 KVA, PHASE B = 22.10 KVA, PHASE C = 22.10 KVA												

LOAD TYPE	L	R	M	H	WH		D	A	K	LM		TOTAL LOADS
CONN. LOAD							73.00				73.00 KVA	202.64 AMP
NET CALC LOAD							73.00				73.00 KVA	202.64 AMP

NEW PANEL SCHEDULE
NEW PANEL ENCLOSED IN SERVICE CABINET. FURNISHED BY CITY OF TACOMA

TACOMA POWER | TACOMA WATER | TACOMA RAIL
TACOMA PUBLIC UTILITIES

concord ENGINEERING

NO	REVISION	DATE	APPD

FINAL CONSTRUCTION CHECKED
BY
DATE
FIELD BOOKS

DATE 1/18/23 | SCALE NTS
DESIGNED NB | CHECKED XPZ
DRAWN LS | PROJECT NAME
DRAWING NAME EL15

XIAOPING ZHANG STATE OF WASHINGTON 40434 REGISTERED PROFESSIONAL ENGINEER
4/6/2023

TACOMA PUBLIC UTILITIES

DOWNTOWN TACOMA EVSE
PANEL SCHEDULES
2 OF 2

SPEC. NO.
WBS NO.
SHEET NO. SHEET 16 OF 16