Addendum No. 2

TACOMA LANDFILL
FLARE STATION UPGRADE

CITY OF TACOMA
REFUSE UTILITY

WORK ORDER NO. AU6911

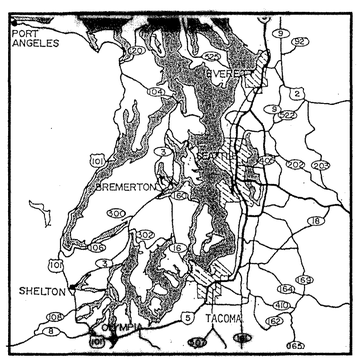

VICINITY MAP

N

SITE LOCATION

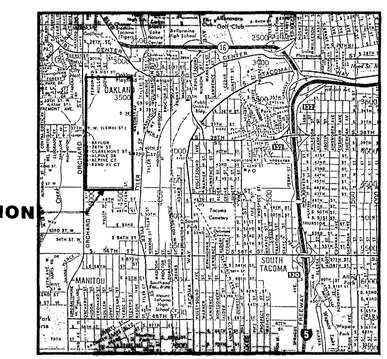

LOCATION MAP

ARCHIVE NUMBER
0056171

THOMAS S. NIELSEN
STATE OF WASHINGTON
REGISTERED PROFESSIONAL ENGINEER

1/14/92

10/19/92

BVT SCIENCE AND TECHNOLOGY CORP. 1201 PACIFIC AVE SUITE 1100 TACOMA, WA 98402-4301 (206) 383-1436	NO	REVISION	DATE	APPD	FINAL CONSTRUCTION CHECKED BY AL DATE 2/4/94 FIELD BOOKS	DATE 1-14-92 / SCALE NTS	DESIGNED TSN/RWP / CHECKED KWW	DRAWN REG / PROJ. ENGR. TSN	REFUSE UTILITY SUPERINTENDENT

BVWST
PROJECT NO.
40024

CITY OF TACOMA
DEPARTMENT OF PUBLIC WORKS

UTILITIES SERVICES ENGINEERING DIV. MANAGER
ASSISTANT DIRECTOR OF PUBLIC WORKS, UTILITY SERVICES
DIRECTOR OF PUBLIC WORKS

TACOMA LANDFILL FLARE STATION UPGRADE
TITLE SHEET, LOCATION MAP AND VICINITY MAP

DRAWING NO. G-1
SHEET NO.
SHEET 1 OF 15

995-G2

LIST OF ABBREVIATIONS

APWA	AMERICAN PUBLIC WORKS ASSOCIATION
APPROX	APPROXIMATELY
@	AT
BF	BLIND FLANGE
℄	CENTERLINE
CLR	CLEAR
CONC	CONCRETE
COND	CONDENSATE
CS	CARBON STEEL
CY	CUBIC YARD
DIA	DIAMETER
DPI	DIFFERENTIAL PRESSURE INDICATOR
DPT	DIFFERENTIAL PRESSURE TRANSMITTER
E	ELECTRIC MOTOR
EA	EACH
ELEC	ELECTRICAL
ELEV	ELEVATION
EST	ESTIMATE
EX	EXISTING
FAB	FABRICATION
FC	FAIL CLOSE
FE	FLOW ELEMENT (ANNUBAR)
FML	FLEXIBLE MEMBRANE LINER
FR	FLOW RECORDER
GALV	GALVANIZED
HDPE	HIGH DENSITY POLYETHYENE
HORIZ	HORIZONTAL
HV	HAND VALVE
IN	INCH
IE	INVERT ELEVATION
LB	POUND
LFG	LANDFILL GAS
LF	LINEAR FEET
LG	LONG
MH	MANHOLE
MAX	MAXIMUM
MIL	1/1000 INCH

LIST OF ABBREVIATIONS

MIN	MINIMUM
NPT	NATIONAL PIPE THREAD
NTS	NOT TO SCALE
NO.	NUMBER
OC	ON CENTER
OZ	OUNCE
PERF	PERFORATED
PI	PRESSURE INDICATOR
PSAPCA	PUGET SOUND AIR POLLUTION CONTROL AUTHORITY
PRV	PRESSURE REGULATING VALVE
PVC	POLYVINYL CHLORIDE
R	RADIUS
REINF	REINFORCE
REQD	REQUIRED
REV	REVISION
S	SLOPE
SCH	SCHEDULE
SDV	SHUT DOWN VALVE
SF	SQUARE FOOT
SIM	SIMILAR
SY	SQUARE YARDS
SS	STAINLESS STEEL
STD	STANDARD
SQ	SQUARE
TE	TEMPERATURE ELEMENT
TI	TEMPERATURE INDICATOR
TIC	TEMPERATURE INDICATING CONTROLLER
TR	TEMERATURE RECORDER
THK	THICK
TYP	TYPICAL
UV	ULTRA VIOLET DETECTOR
V	VACUUM
W	WATER
W/	WITH
WSDOT	WASHINGTON STATE DEPARTMENT OF TRANSPORTATION
WT	WATER TRAP
WWM	WELDED WIRE MESH
ZSO	LIMIT SWITCH OPEN
ZSC	LIMIT SWITCH CLOSED

LEGEND

- BUTTERFLY VALVE
- 3 WAY BALL VALVE
- BALL VALVE
- NEEDLE VALVE
- BLOWER
- FLEX HOSE / BELLOWS
- REDUCER
- GATE VALVE
- CLAMP COUPLING
- RUPTURE DISK
- FILTER
- NORMALLY CLOSED OR LOCKED SHUT VALVE
- PRESSURE REGULATOR
- S — SOLENIOD
- FLAME ARRESTER
- E — MOTOR

DRAWING INDEX

SHEET	REVISION	DRAWING NUMBER	TITLE
1	0	G-1	TITLE SHEET, LOCATION MAP AND VICINITY MAP
2	0	G-2	ABBREVIATIONS, LEGEND, AND SHEET INDEX
3	0	C-1	SITE PLAN
4	0	M-1	PIPING AND INSTRUMENTATION DIAGRAM
5	0	M-2	FLARE AND PIPING LAYOUT
6	0	M-3	LANDFILL GAS AND PROPANE PIPING DETAILS
7	0	M-4	PIPE SUPPORT DETAILS
8	0	E-1	ELECTRICAL
9	0	E-2	FLARE NO. 101/102 CONTROL PANEL SCHEMATIC SHEET 1 OF 2
10	0		
11	0	E-3	FLARE NO. 101/102 CONTROL PANEL SCHEMATIC SHEET 2 OF 2
12	0		
13	1	E-4	FLARE NO. 101/102 CONTROL PANEL LAYOUT
14	1	E-5	MISCELLANEOUS ELECTRICAL
15	1	D-977-85-0021 SHEET 24	FLARE NO. 1/2 CONTROL PANEL SCHEMATIC SHEET 1 OF 2
		D-977-85-0021 SHEET 25	FLARE NO. 1/2 CONTROL PANEL SCHEMATIC SHEET 2 OF 2
		D-977-85-0021 SHEET 26	FLARE NO. 1/2 CONTROL PANEL LAYOUT

DETAIL REFERENCING

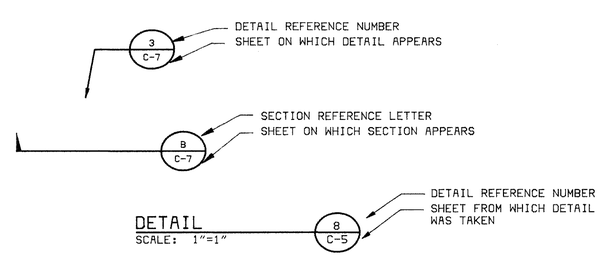

GENERAL NOTES

1. VERTICAL DATUM IS CITY OF TACOMA PUBLIC WORKS DEPARTMENT DATUM (EQUALS N.G.V.D. 29 PLUS 14.01 FEET).

   HORIZONTAL DATUM IS WASHINGTON STATE PLANE COORDINATE SYSTEM, SOUTH ZONE, N.A.D. 27.

2. ALL DAMAGE BY THE CONTRACTOR'S FORCES SHALL BE RESTORED TO PRECONSTRUCTION CONDITION BY THE CONTRACTOR AT THE CONTRACTOR'S EXPENSE.

ARCHIVE NUMBER 0056172

STATE OF WASHINGTON 37281 REGISTERED PROFESSIONAL ENGINEER
EXPIRES 10/19/92

SCIENCE AND TECHNOLOGY CORP.
1201 PACIFIC AVE
SUITE 1100
TACOMA, WA 98402-4301
(206) 383-1436

NO	REVISION	DATE	APPD

FINAL CONSTRUCTION CHECKED BY AL
DATE 2/4/94
FIELD BOOKS

DATE 1-14-92	SCALE NTS
DESIGNED TSN	CHECKED
DRAWN REG/LF	PROJ. ENGR. TSN

REFUSE UTILITY SUPERINTENDENT

BVWST
PROJECT NO. 40024

CITY OF TACOMA
DEPARTMENT OF PUBLIC WORKS

UTILITIES SERVICES ENGINEERING DIV. MANAGER
ASST. PUBLIC WORKS DIR./UTILITY SERVICES
DIRECTOR OF PUBLIC WORKS

TACOMA LANDFILL FLARE STATION UPGRADE
ABBREVIATIONS, LEGEND, AND SHEET INDEX

AU 6911
DRAWING NO. G-2
SHEET NO. SHEET 2 OF 15

995—C1

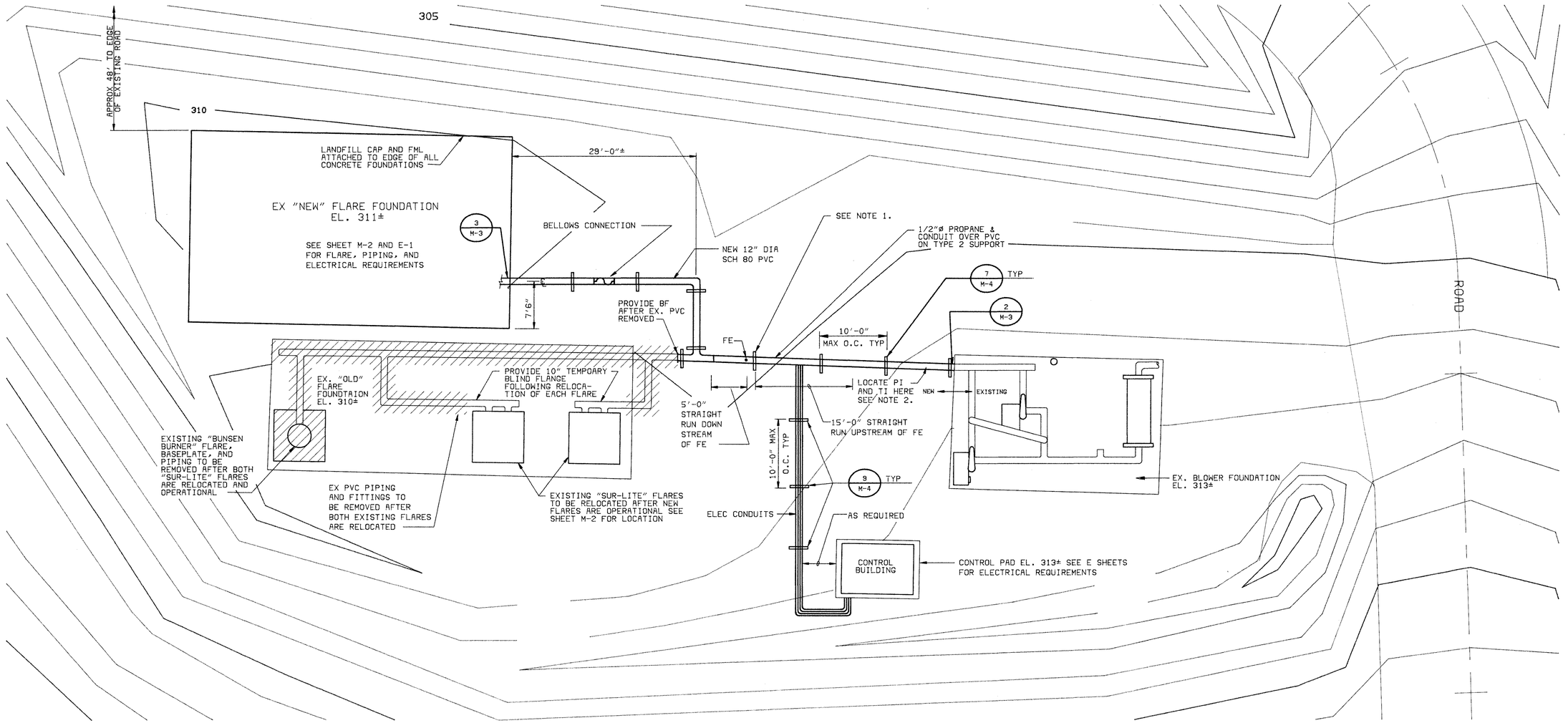

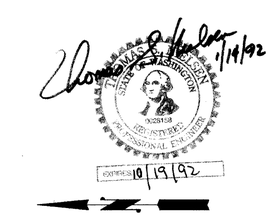

8' 4' 0 8' 16'
1/8"=1'-0"

ARCHIVE NUMBER
0056173

NOTES:

1. LOCATE SUPPORT WITHIN 2'-0" OF FE DPT MOUNTED ON PIPE SUPPORT SEE DETAIL 7 SHEET M-4.
2. PROVIDE PI AND TI PER SPECIFICATIONS. THE PI SHALL BE SEPARATED BY 1'-0" FROM TI, PI BEING "DOWN STREAM FROM TI". DRILL AND TAP 1/4" NPT FOR PI AND 1/2" NPT FOR TI. PROVIDE 1/4" BALL VALVE FOR PI. SEE SHEET M-1.
3. CONTRACTOR TO COORDINATE WITH OWNER AND ENGINEER AT EACH STAGE OF REMOVEL OF "BUNSEN BURNER" FLARE AND RELOCATION OF EXISTING "SUR-LITE" FLARES TO ENSURE SAFE CONDITIONS AND MINIMIZE DOWN TIME OF SYSTEM TO UNDER 2 HOURS.
4. FOR LEGEND, ABBREVIATIONS, AND GENERAL NOTES, SEE SHEET G-2.
5. FOR PIPE SUPPORT DETAILS, SEE SHEET M-4.

WASTE SCIENCE AND TECHNOLOGY CORP.
1201 PACIFIC AVE
SUITE 1100
TACOMA, WA 98402-4301
(206) 383-1436

NO	REVISION	DATE	APPD

FINAL CONSTRUCTION CHECKED BY AL
DATE 2/4/94
FIELD BOOKS

DATE 1-14-92	SCALE 1/8"=1'-0"
DESIGNED RWP/TSN	CHECKED KWW
DRAWN LLE	PROJ. ENGR. TSN

REGULATORY UTILITY SUPERINTENDENT

BVWST
PROJECT NO.
40024

CITY OF TACOMA
DEPARTMENT OF PUBLIC WORKS

UTILITIES SERVICES ENGINEERING DIV. MANAGER
ASST. PUBLIC WORKS DIR./UTILITY SERVICES
DIRECTOR OF PUBLIC WORKS

TACOMA LANDFILL FLARE STATION UPGRADE

SITE PLAN

AU G911
DRAWING NO. C-1
SHEET NO. SHEET 3 OF 15

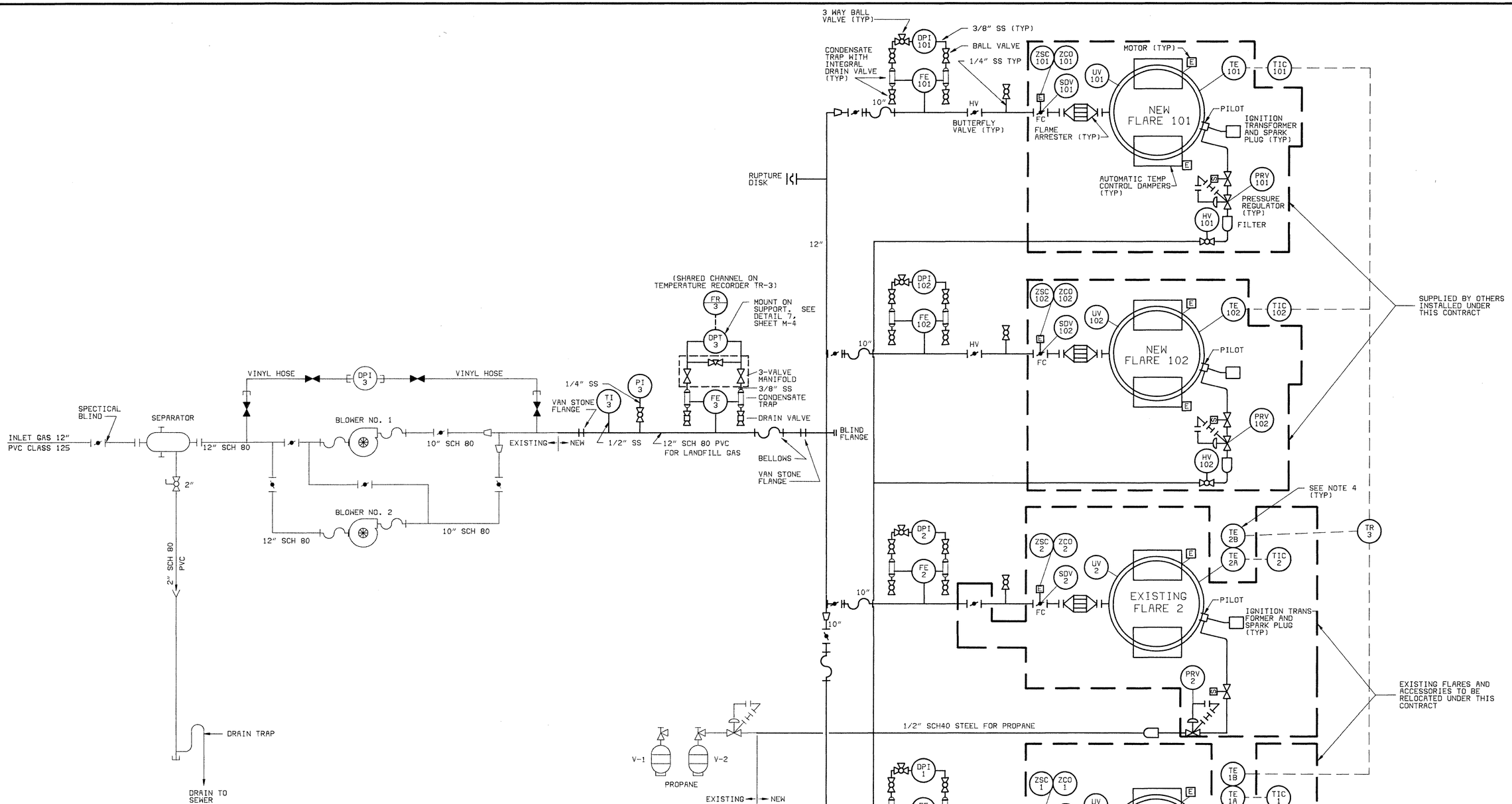

NOTES:

1. FOR LEGEND, ABBREVIATIONS, AND GENERAL NOTES, SEE SHEET G-2.
2. THIS DRAWING DOES NOT REPRESENT EQUIPMENT LAYOUT, ONLY CONCEPTUAL ARRANGEMENT.
3. FOR ADDITIONAL ELECTRICAL POWER AND CONTROL REQUIREMENTS, SEE ELECTRICAL DRAWINGS.
4. REPLACE EXISTING THERMOCOUPLES ON FLARES NUMBER 1 AND 2.

ARCHIVE NUMBER 0056174

EXPIRES 10/19/92

WASTE SCIENCE AND TECHNOLOGY CORP.
1201 PACIFIC AVE
SUITE 1100
TACOMA, WA 98402-4301
(206) 383-1436

NO	REVISION	DATE	APPD

FINAL CONSTRUCTION CHECKED BY AL
DATE 2/4/94
FIELD BOOKS

DATE 1-14-92	SCALE NTS
DESIGNED RWP/TSN	CHECKED KWW
DRAWN LLF	PROJ. ENGR. TSN

REVISE UTILITY SUPERINTENDENT

BVWST
PROJECT NO. 40024

CITY OF TACOMA
DEPARTMENT OF PUBLIC WORKS

FINANCE SERVICES ENGINEERING DIV. MANAGER
ASST. PUBLIC WORKS DIR./UTILITY SERVICES
DIRECTOR OF PUBLIC WORKS

TACOMA LANDFILL FLARE STATION UPGRADE
PIPING AND INSTRUMENTATION DIAGRAM

AUG911
DRAWING NO. M-1
SHEET NO. SHEET 4 OF 15

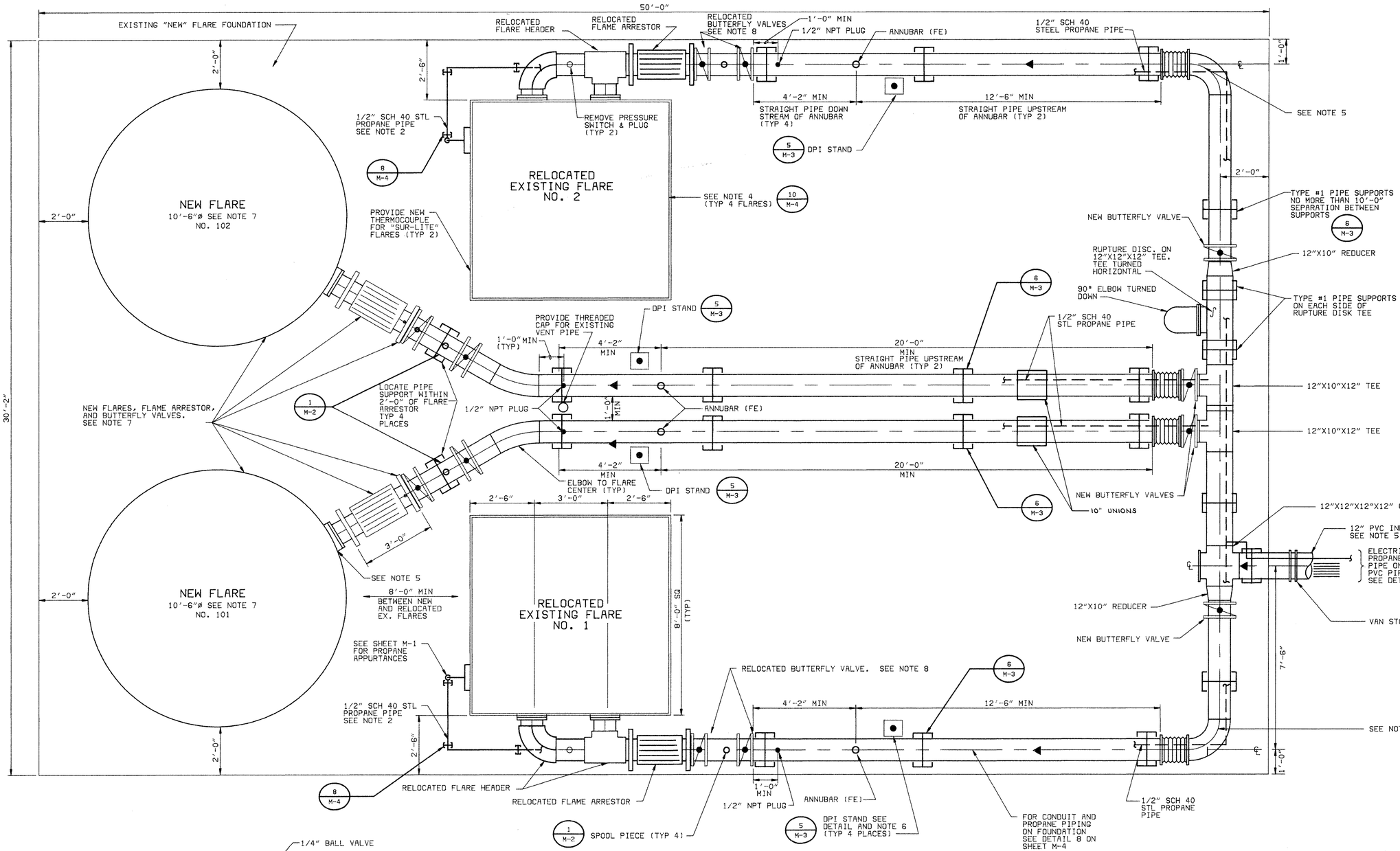

NOTES:

1. ALL PVC PIPE IS NEW SCHEDULE 80.
2. PROPANE PIPE TO BE ATTACHED TO ELECTRICAL CONDUIT SUPPORT (TYPE #3) WHICH WILL RUN UNDER PVC PIPE ON FLARE PAD. CONNECT PROPANE PIPE TO FLARE PILOT ASS'Y IN ACCORDANCE WITH FLARE MANUFACTURERS INSTRUCTIONS.
3. CONTRACTOR SHALL COORDINATE INSTALLATION OF NEW AND EX. FLARES WITH APPROPRIATE FLARE MANUFACTURER TO PROVIDE FUNCTIONING SYSTEM.
4. CONTRACTOR SHALL ANCHOR NEW FLARES USING TEMPLATE PROVIDED BY MANUFACTURER. FOR EX. FLARES, CONTRACTOR SHALL ANCHOR TO MATCH ANCHOR PATTERN ON OLD FOUNDATION OR AS DIRECTED BY CONSULTANT.
5. EAST WEST HEADER CL ELEVATION TO MATCH CL ELEVATION OF INLET NOZZLE IN NEW FLARES. ROLL ELBOWS DOWN AND PROVIDE TRANSITION ELBOW FITTING TO MATCH ELEVATION OF NOZZLE ON EXISTING FLARES. RUNS OF STRAIGHT PIPE SHALL BE HORIZONTAL.
6. LOCATE DPI STANDS ADJACENT TO EACH ANNUBAR. ATTACH DPI TO STAND AND CONNECT TO ANNUBAR. SEE SHEET M-1.
7. TWO EACH NEW FLARES, FLAME ARRESTORS AND BUTTERFLY VALVES PROVIDED BY OTHERS INSTALLED UNDER THIS CONTRACT.
8. EXISTING BUTTERFLY VALVES ARE "DEMCO DISC" 10" DIA. MOTOR OPERATOR IS "ELECTRIC POWER" MODEL MAR-250-16.
9. PVC, PROPANE PIPING, AND CONDUIT TO BE PAINTED PER SPECIFICATIONS. SEE ELECTRICAL DRAWINGS FOR CONDUIT ROUTING AND CONNECTIONS.
10. FOR LEGEND, ABBREVIATIONS, AND GENERAL NOTES, SEE SHEET G-2.

SPOOL PIECE (1/M-2)
SCALE: NTS

ARCHIVE NUMBER 0056175

10/19/92

SCIENCE AND TECHNOLOGY CORP. 1201 PACIFIC AVE SUITE 1100 TACOMA, WA 98402-4301 (206) 383-1436	NO	REVISION	DATE	APPD	FINAL CONSTRUCTION CHECKED BY AL DATE 2/4/94 FIELD BOOKS	DATE 1-14-92 / SCALE 1/2"=1'-0" / DESIGNED TSN/RWP / CHECKED KWW / DRAWN LLF / PROJ. ENGR. TSN / REGULATORY UTILITY SUPERINTENDENT	BVWST PROJECT NO. 40024

CITY OF TACOMA
DEPARTMENT OF PUBLIC WORKS
UTILITIES, SERVICES ENGINEERING DIV. MANAGER
DIRECTOR OF PUBLIC WORKS/UTILITY SERVICES

TACOMA LANDFILL FLARE STATION UPGRADE
FLARE AND PIPING LAYOUT

AUG911
DRAWING NO. M-2
SHEET NO. SHEET 5 OF 15

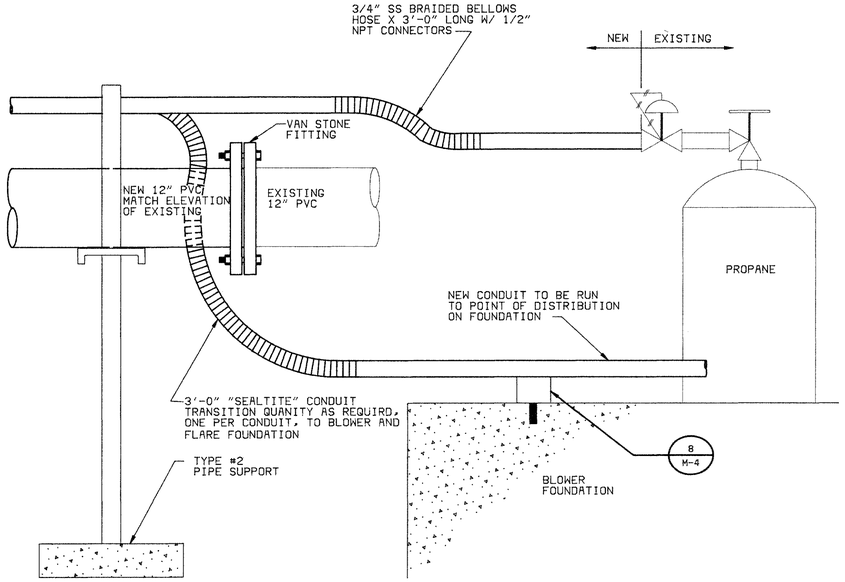

BLOWER FOUNDATION TRANSITION DETAIL (2 / C-1)
SCALE: NTS

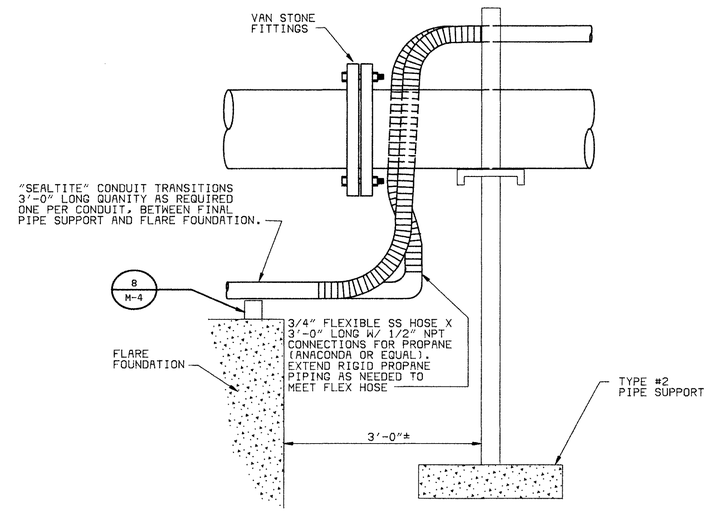

FLARE FOUNDATION TRANSITION DETAIL (3 / M-2)
SCALE: NTS

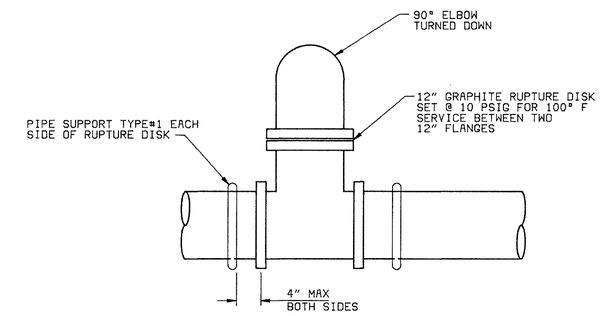

PLAN VIEW

RUPTURE DISK AND TEE DETAIL (4 / M-2)
SCALE: NTS

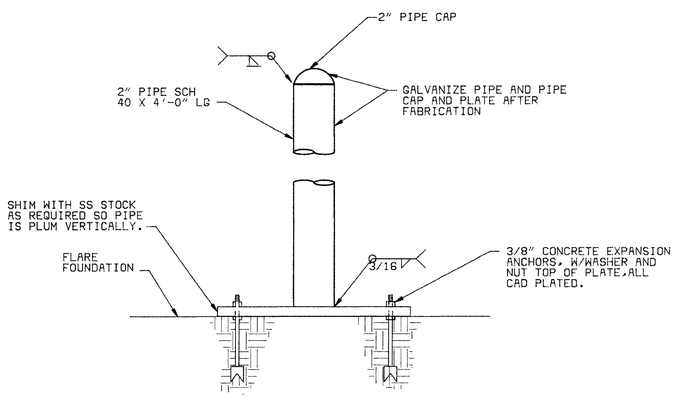

SECTION (A / M-3)
SCALE: NTS

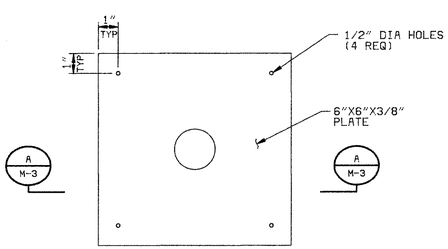

DPI SUPPORT STAND DETAIL (5 / M-2)
SCALE: NTS

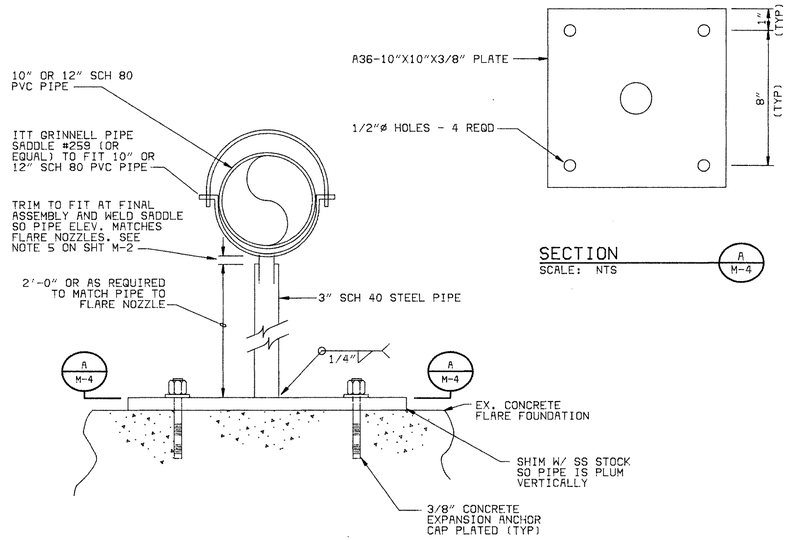

SUPPORT TYPE 1 FOR PVC PIPING ON FLARE FOUNDATION (6 / M-2)
SCALE: NTS

NOTE:

MAXIMUM SUPPORT SPACING IS 10'-0" O.C. ALL PARTS GALVANIZED AFTER FABRICATION

SECTION (A / M-4)
SCALE: NTS

NOTE:

1. FOR LEGEND, ABBREVIATIONS, AND GENERAL NOTES SEE SHEET G-2

ARCHIVE NUMBER 0056176

10/19/92

SCIENCE AND TECHNOLOGY CORP. 1201 PACIFIC AVE SUITE 1100 TACOMA, WA 98402-4301 (206) 383-1436	NO	REVISION	DATE	APPD	FINAL CONSTRUCTION CHECKED BY AL DATE 2/4/94 FIELD BOOKS	DATE 1-14-92 / SCALE NTS / DESIGNED TSN / CHECKED KWW / DRAWN REG / PROJ. ENGR. TSN / REFUSE UTILITY SUPERINTENDENT	BVWST PROJECT NO. 40024

CITY OF TACOMA
DEPARTMENT OF PUBLIC WORKS

UTILITIES SERVICES ENGINEERING DIV. MANAGER
UTILITIES SERVICES AUTHORITY SERVICES
DIRECTOR OF PUBLIC WORKS

TACOMA LANDFILL FLARE STATION UPGRADE
LANDFILL GAS AND PROPANE PIPING DETAILS

AU6911
DRAWING NO. M-3
SHEET NO. SHEET 6 OF 15

995-M4

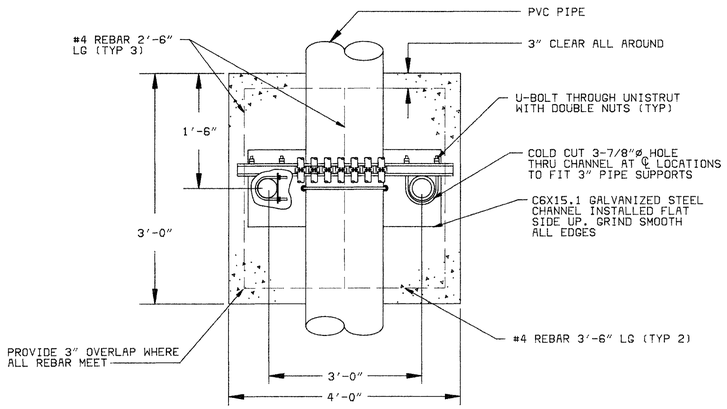

PLAN VIEW

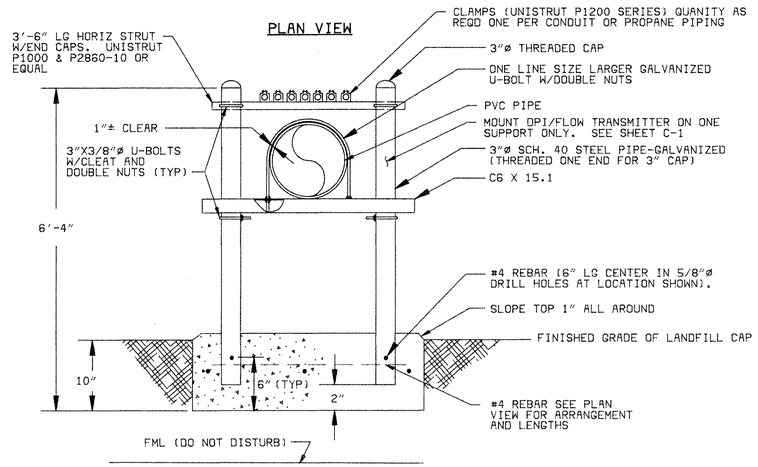

ELEVATION VIEW

SUPPORT TYPE 2 FOR CONDUIT AND PIPE ON LANDFILL CAP (7 / C-1)
SCALE: NTS

NOTE:

1. MAXIMUM SUPPORT SPACING IS 10'-0" O.C. ALL PARTS GALVANIZED AFTER FABRICATION. HORIZONTAL SUPPORTS FOR PIPE AND CONDUIT TO BE LEVEL.
2. RESTORE LANDFILL CAP TO ORIGINAL CONDITION AND GRADE AFTER PIPE SUPPORT INSTALLATION.

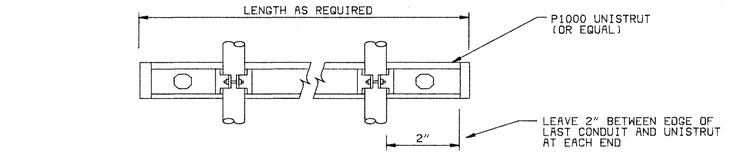

PLAN VIEW

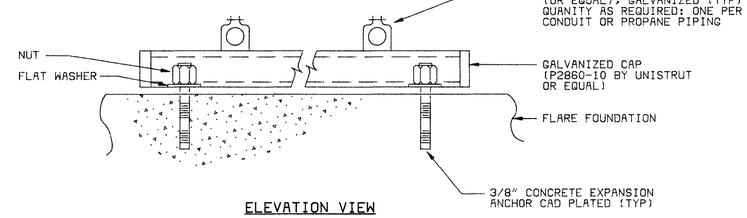

ELEVATION VIEW

SUPPORT TYPE 3 FOR PROPANE PIPE AND CONDUIT ON FLARE FOUNDATION (8 / M-2,3)
SCALE: NTS

NOTE:

MAXIMUM SUPPORT SPACING IS 10'-0" O.C. ALL PARTS GALVANIZED AFTER FABRICATION

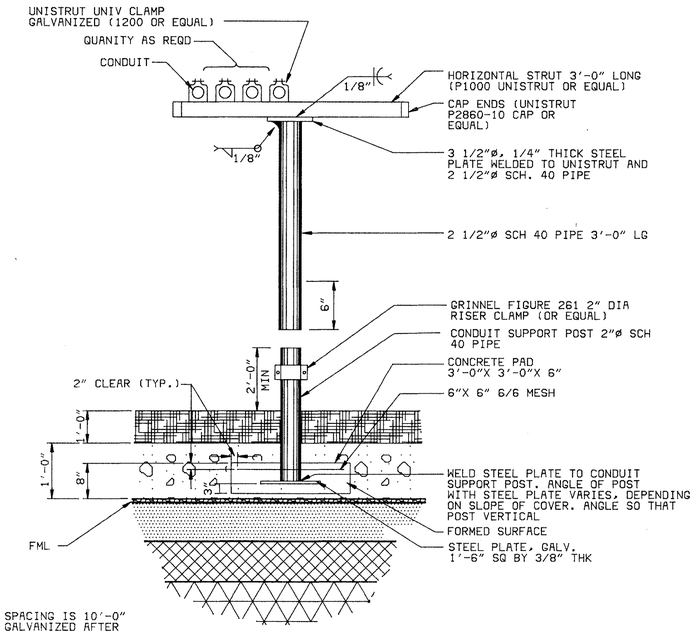

NOTE:

1. MAXIMUM SUPPORT SPACING IS 10'-0" O.C. ALL PARTS GALVANIZED AFTER FABRICATION
2. RESTORE LANDFILL CAP TO ORIGINAL CONDITION AND GRADE AFTER PIPE SUPPORT INSTALLATION.

SUPPORT TYPE 4 FOR CONDUIT ON LANDFILL CAP (9 / C-1)
SCALE: NTS

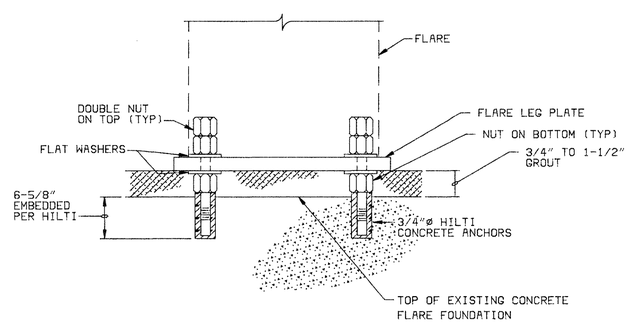

FLARE ANCHOR DETAIL (10 / M-2)
SCALE: NTS

NOTE:

GROUT TO BE UNDER EACH FOOT. PROVIDE 1 INCH AIR SPACE BETWEEN FLARE AND FOUNDATION BETWEEN FLARE LEGS

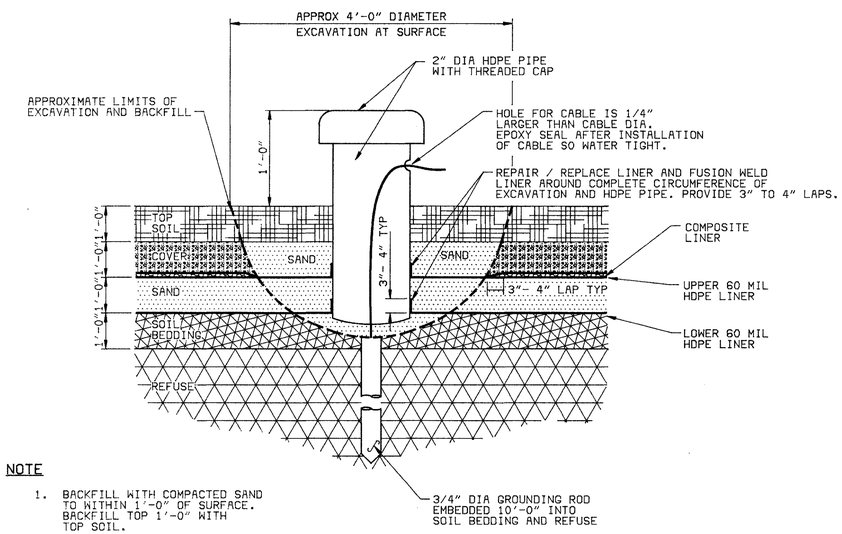

NOTE

1. BACKFILL WITH COMPACTED SAND TO WITHIN 1'-0" OF SURFACE. BACKFILL TOP 1'-0" WITH TOP SOIL.
2. SEE SPECIFICATION SECTION 02790.

GROUNDING ROD DETAIL (11 / E-1,E-4,E-5)
SCALE = NTS

ARCHIVE NUMBER 0056177

10/19/92

BVSCIENCE AND TECHNOLOGY CORP. 1201 PACIFIC AVE SUITE 1100 TACOMA, WA 98402-4301 (206) 383-1436	NO	REVISION	DATE	APPD	FINAL CONSTRUCTION CHECKED BY AL DATE 2/4/94 FIELD BOOKS	DATE 1-14-92 / SCALE NTS / DESIGNED RWP/TSN / CHECKED KWW / DRAWN LLF / PROJ. ENGR. TSN / REFUSE UTILITY SUPERINTENDENT	BVWST PROJECT NO. 40024

CITY OF TACOMA
DEPARTMENT OF PUBLIC WORKS
UTILITIES SERVICES ENGINEERING DIV. MANAGER / PUBLIC WORKS DIR. OR HEAD ENGINEER / DIRECTOR OF PUBLIC WORKS

TACOMA LANDFILL FLARE STATION UPGRADE
PIPE SUPPORT DETAILS

AUG911
DRAWING NO. M-4
SHEET NO. SHEET 7 OF 15

E0000299

NOTES:

1. CONTRACTOR SHALL FURNISH AND INSTALL MANUAL TRANSFER SWITCH ON EXTERIOR EAST WALL OF CONTROL BUILDING. RACEWAY AND CONDUCTORS SHALL BE PROVIDED TO CONNECT SWITCH AS INDICATED ON DWG E-5. SWITCH SHALL BE SUPPORTED BY A UNISTRUT RACK ANCHORED TO THE CONTROL BUILDING CONCRETE PAD AND WALL. EXTERNAL SWITCH OPERATING HANDLE SHALL BE 4'-6" ABOVE CONCRETE PAD.
2. EXISTING FLARES NO. 1 AND NO. 2 INCLUDING ASSOCIATED EQUIPMENT SHALL BE RELOCATED TO THE NEW POSITION INDICATED ON THE DRAWINGS. RELOCATED ELECTRICAL EQUIPMENT SHALL BE RECONNECTED AS INDICATED ON THE ELECTRICAL DRAWINGS. FLARE MODIFICATIONS SHALL BE MADE AS INDICATED ON THE DRAWINGS. EXISTING RACEWAY AND CONDUCTORS CONNECTING EQUIPMENT TO BE RELOCATED TO DEVICES NOT TO BE RELOCATED SHALL BE REMOVED ABOVE GRADE AND ABANDONED IN PLACE BELOW GRADE.
3. REMOVE THREE EXISTING LIGHT FIXTURES AND ASSOCIATED POLES AND ABOVE GRADE RACEWAY AND CONDUCTORS TO EXISTING PANEL DP-1, BREAKER NO. 4 (SEE NOTE 7, DWG E-5). BELOW GRADE RACEWAY AND CONDUCTORS SHALL BE ABANDONED IN PLACE.
4. FOR CONTINUATION, SEE JB-101A AND JB-102A TERMINAL BLOCK DIAGRAMS ON DWG E-5.
5. FOR CONTINUATION, SEE JB-101B AND JB-102B TERMINAL BLOCK DIAGRAMS ON DWG E-5.
6. FOR DEMOLITION AND CONSTRUCTION POWER ONE-LINE DIAGRAMS, SEE DWG E-5.
7. FOR DP-1 SCHEDULE, SEE DWG E-5.
8. ROUTE ONE SPARE 2" RGS OR IMC RACEWAY ON SUPPORTS WITH AN INSTALLED PULL WIRE BETWEEN THE BLOWERS AREA AND THE CONTROL BUILDING, AND BETWEEN THE FLARES AREA AND THE CONTROL BUILDING. RACEWAYS SHALL NOT ENTER THE CONTROL BUILDING. CAP RACEWAYS ON BOTH ENDS.
9. FLARE 1/2 CONTROL PANEL SHALL BE MODIFIED AS INDICATED ON DWGS D-977-85-0021 (SHEET 24), D-977-85-0021 (SHEET 25) AND D-977-85-0021 (SHEET 26).
10. FOR EXTERNAL WIRING REQUIREMENTS, SEE TERMINAL BLOCK DIAGRAMS DWG E-4. FOR SCHEMATIC, SEE DWGS E-2 AND E-3. FOR LAYOUT, SEE DWG E-4. MOUNT FLARE 101/102 CONTROL PANEL BY DRILLING AND TAPPING EXISTING STEEL PLATE BACKBOARD AND USING HEX HEAD BOLTS WITH LOCK WASHERS.

LEGEND:

- (TDR 10) — INSTRUMENT OR CONTROL DEVICE FUNCTIONAL ABBREVIATION; IDENTIFICATION NUMBER
- TDR-10-1 — INSTRUMENT OR CONTROL DEVICE IDENTIFICATION; CONTACT NUMBER OFF RELAY IF APPLICABLE
- (R) INDICATING LIGHT
  - R = RED
  - G = GREEN
  - W = WHITE
  - A = AMBER
- NORMALLY OPEN CONTACT
- NORMALLY CLOSED CONTACT
- WIRES NOT CONNECTED
- WIRES CONNECTED
- TERMINAL BLOCK DENOTING FIELD WIRING EXTERNAL TO PANEL
- GROUND ROD INSTALLATION OR CONNECTION AS REQUIRED BY 1990 NEC. GROUND RODS SHALL BE 3/4"-DIAMETER x 10'-0" LONG COPPERWELD (SEE GENERAL ELECTRICAL NOTE 9).

3/4" - 3#12 & 1#12G

- 3/4" — RACEWAY SIZE, RGS OR IMC UNLESS NOTED OTHERWISE
- 3 — NUMBER OF CONDUCTORS
- 12 — CONDUCTOR WIRE SIZE (AWG OR MCM), COPPER
- 1 — NUMBER OF GROUND WIRES
- 12G — GROUND WIRE SIZE (AWG OR MCM), COPPER

LEGEND: (CONT.)

- (PC) PHOTOCELL
- HOME RUN SHOWING CONDUCTORS, #12AWG (POWER AND LIGHTING) OR #14AWG (CONTROL) COPPER CONDUCTORS AND 3/4" RGS OR IMC RACEWAY UNLESS SPECIFIED OTHERWISE. SHORT LINE INDICATES PHASE, LONG LINE INDICATES NEUTRAL, LONG LINE WITH DOT INDICATES GROUND
- HOME RUN DESTINATION AS SPECIFIED ON THE DRAWINGS
- [JB] JUNCTION BOX-SIZE PER 1990 NEC

DETAIL MARKER

(1 / -) — DRAWING WHERE DETAIL APPEARS DASH INDICATES SAME DRAWING

SECTION OR DETAIL TITLE

SECTION
SCALE: NONE

- SECTION OR DETAIL TITLE
- SECTION LETTER OR DETAIL NUMBER
- DRAWING WHERE SECTION OR DETAIL WAS TAKEN DASH INDICATES SAME DRAWING

ABBREVIATIONS:

Ø	PHASE
A, AMP	AMPERE OR AMBER
AFF	ABOVE FINISHED FLOOR
AIC	AMPERE INTERRUPTING CAPACITY
APPROX	APPROXIMATELY
AWG	AMERICAN WIRE GAGE
BKR	BREAKER
BLDG	BUILDING
CB	CIRCUIT BREAKER
CKT	CIRCUIT
CONT	CONTINUOUS OR CONTINUATION
COND	CONDUCTOR(S)
CP	CONTROL PANEL
CR	CONTROL RELAY
CU	COPPER
DC	DIRECT CURRENT
DEMO	DEMOLITION
DP	DISTRIBUTION PANEL
DWG	DRAWING
EXIST	EXISTING
F	FUSE
FIXT	FIXTURE
FLR	FLOOR
FR	FLOW RECORDER
FT	FLOW TRANSMITTER
G, GND	GROUND OR GREEN
GFCI	GROUND FAULT CIRCUIT INTERRUPTER
HPS	HIGH PRESSURE SODIUM
HT	HEIGHT
HZ	HERTZ (CYCLES PER SECOND)
IMC	INTERMEDIATE METAL CONDUIT
JB	JUNCTION BOX
KV	KILOVOLTS
KVA	KILOVOLTAMPERES
KW	KILOWATT
L	LAMP OR LINE
LFMC	LIQUIDTIGHT FLEXIBLE METAL CONDUIT
LTG	LIGHT OR LIGHTING

ABBREVIATIONS (CONT.):

M	MOTOR
MA	MILLIAMPERE
MIN	MINIMUM OR MINUTE
MTG	MOUNTING
MOV	MOTOR OPERATED VALVE
MTL	MATERIAL
N	NEUTRAL (GROUNDED) SIDE OF 120VAC SUPPLY, 60HZ
N.C.	NORMALLY CLOSED
NEC	NATIONAL ELECTRICAL CODE (1990)
NESC	NATIONAL ELECTRICAL SAFETY CODE (1990)
NO., #	NUMBER
N.O.	NORMALLY OPEN
PB	PUSHBUTTON
PC	PHOTOCELL
PNL	PANEL
POS	POSITION
PR	PAIR
R	RACEWAY OR RED
RECPT	RECEPTACLE
RGS	RIGID GALVANIZED STEEL
RMS	ROOT-MEAN-SQUARE
SDV	SHUT DOWN VALVE
SEC	SECOND
SH	SHIELD
SHD	SHIELDED
SHT	SHEET
SOV	SOLENOID OPERATED VALVE (120VAC)
SPEC	SPECIFICATION
SS	SELECTOR SWITCH
STD	STANDARD
SYM	SYMMETRICAL
TB	TERMINAL BLOCK
TDR	TIME DELAY RELAY
TE OR T/C	TEMPERATURE ELEMENT (TYPE K THERMOCOUPLE)
TEMP	TEMPERATURE
TIC	TEMPERATURE INDICATING CONTROLLER

ABBREVIATIONS (CONT.):

TR	TEMPERATURE RECORDER
TYP	TYPICAL
UL	UNDERWRITERS' LABORATORIES, INC.
UV	ULTRAVIOLET SCANNER (FLAME DETECTOR)
V	VOLT
VAC	VOLTS ALTERNATING CURRENT (60 HERTZ)
W	WATT OR WHITE
WP	WEATHER PROOF
XFMR	TRANSFORMER
ZSO	POSITION SWITCH-OPEN
ZSC	POSITION SWITCH-CLOSED

GENERAL ELECTRICAL NOTES:

1. FOR DWG INDEX, SEE DWG G-2
2. ALL RELAY CONTACTS ARE SHOWN WITH COIL IN DE-ENERGIZED CONDITION.
3. RACEWAYS SHALL BE FIELD ROUTED ABOVE GRADE AND PROVIDED WITH ACCESSORIES AS REQUIRED SIZED IN ACCORDANCE WITH THE 1990 NEC. RACEWAY SUPPORTS SHALL BE PROVIDED AND BE OF THE TYPE AS REQUIRED BY THE 1990 NEC AND DWGS C-1 AND M-4. RACEWAY TRANSITIONS SHALL BE PROVIDED AS REQUIRED IN ACCORDANCE WITH THE DETAILS ON DWG M-3.
4. RGS OR IMC RACEWAYS SHALL BE CONVERTED TO LIQUIDTIGHT FLEXIBLE METAL CONDUIT A MINIMUM OF 18-INCHES FROM ALL FIELD LOCATED INSTRUMENTS AND CONTROL DEVICES.
5. FOR EXACT LOCATION OF IN-LINE PIPING DEVICES, SEE DWGS C-1 AND M-2.
6. FOR PIPING AND INSTRUMENTATION DIAGRAM, SEE DWG M-1.
7. LIGHT FIXTURES ARE IDENTIFIED BY THE FOLLOWING METHOD: (A) CAPITAL LETTER OR FIXTURE DESIGNATION INSIDE CIRCLE INDICATES FIXTURE TYPE FOR EACH FIXTURE PER THE FIXTURE SCHEDULE.
8. FOR ADDITIONAL ELECTRICAL REQUIREMENTS, SEE SPEC SECTION 16050.

LIGHTING FIXTURE SCHEDULE

ITEM	DESCRIPTION
(A)	FLOODLIGHT, 150W, HPS, WEATHERPROOF, 120V, POLE MOUNT APPROX 14'-0" ABOVE CONCRETE WITH KNUCKLE FITTER, AIM IN THE DIRECTION INDICATED. ANGLE APPROX 45 DEGREES FROM VERTICAL. TAP 3/4" HOLE IN HAND HOLE PLATE OF SUPPORT POLE FOR CONDUIT ENTRANCE. HOLOPHANE "PREDATOR" FIXTURE WITH LAMP AND APPLETON SUPPORT POLE CATALOG NO. G-PSSH-14 OR APPROVED EQUAL. FASTEN BASE PLATE OF POLE TO EXISTING CONCRETE PAD WITH FOUR 3/4"-DIAMETER EXPANSION ANCHORS WITH 6" EMBEDMENT DEPTH. INSTALL ANCHOR BOLTS PER MANUFACTURER'S RECOMMENDATIONS.
(B)	STROBE LIGHT, HIGH INTENSITY-RED, SELF-CONTAINED POWER SUPPLY PROVIDING 80 DOUBLE FLASHES PER MINUTE, 120V, 0.4A, FLANGE TYPE MOUNTING ON 1" CONDUIT ABOVE BUILDING ROOF LINE, EDWARDS (GENERAL SIGNAL) SERIES NO. 57 WITH LENS CATALOG NO. 57R-AY OR APPROVED EQUAL.
(PC)	PHOTOCELL, 120V, 1000 WATTS, MOUNT ON EXTERIOR BUILDING SIDEWALL 8'-0" ABOVE CONCRETE. CROUSE-HINDS DS60 OR APPROVED EQUAL.

GENERAL ELECTRICAL NOTES (CONT.):

9. GROUND ROD INSTALLATIONS SHALL BE PROVIDED WHERE INDICATED ON THE DRAWINGS. INSTALLATIONS SHALL BE IN ACCORDANCE WITH DETAIL 11 ON DWG M-4 AND THE SPECIFICATION.

ARCHIVE NUMBER 0056178

SCIENCE AND TECHNOLOGY CORP.
1201 PACIFIC AVE
SUITE 1100
TACOMA, WA 98402-4301
(206) 383-1436

NO	REVISION	DATE	APPD

FINAL CONSTRUCTION CHECKED BY AL DATE 2/4/94 FIELD BOOKS

DATE	SCALE
1-14-92	1/8"=1'-0"
DESIGNED	CHECKED
MDW	RCT
DRAWN	PROJ. ENGR.
LLF/PVT	TSN

REFUSE UTILITY SUPERINTENDENT

BVWST
PROJECT NO. 40024

CITY OF TACOMA
DEPARTMENT OF PUBLIC WORKS

UTILITIES SERVICES ENGINEERING DIV. MANAGER
ASST. PUBLIC WORKS DIR./UTILITY SERVICES
DIRECTOR OF PUBLIC WORKS

TACOMA LANDFILL FLARE STATION UPGRADE
ELECTRICAL

AU G911
DRAWING NO. E-1
SHEET NO.
SHEET 8 OF 15

CAD DWG NO: E0000299/P
DATE: 1-7-92 PVT
PLOT SCALE: 1/8"=1'-0"

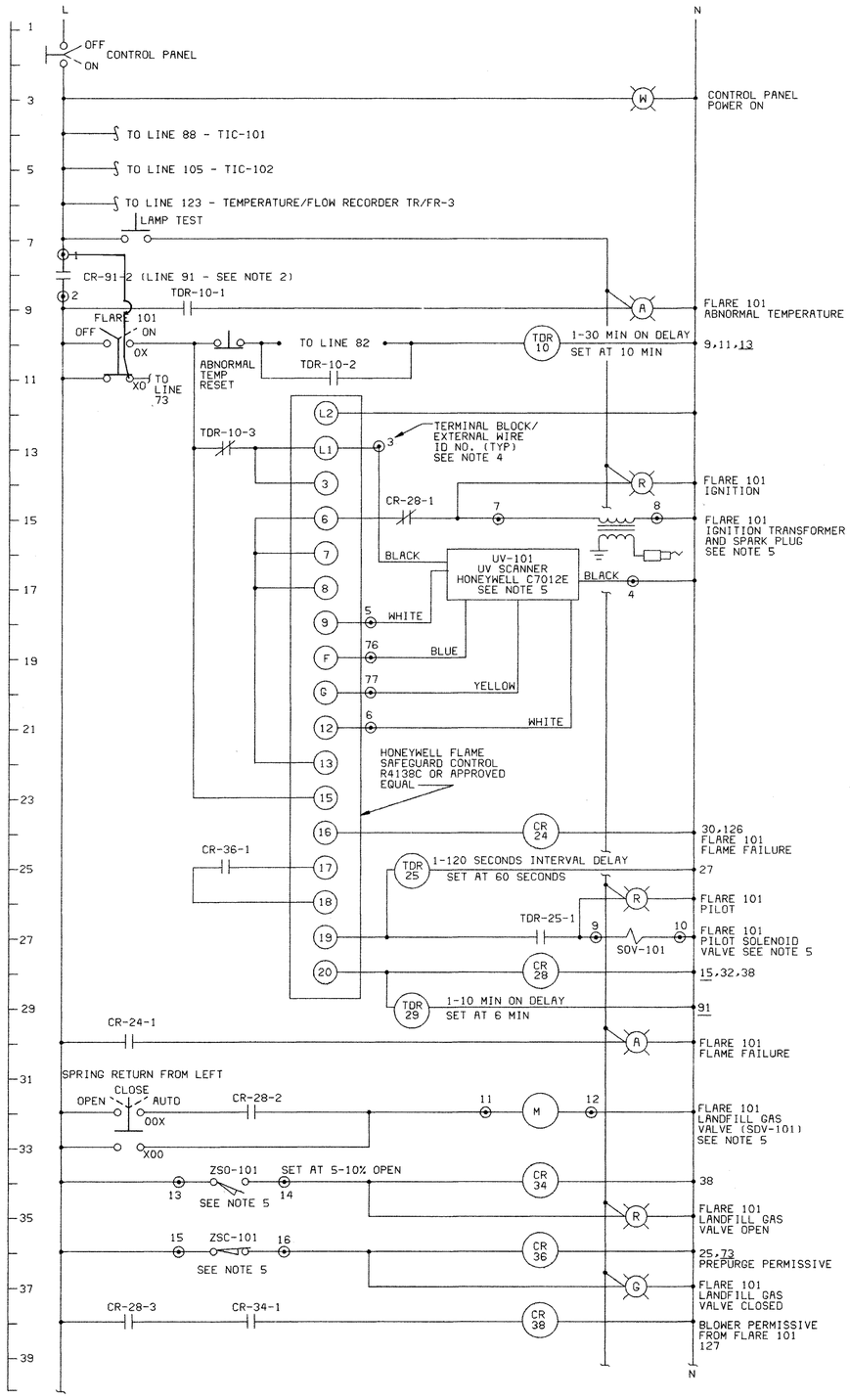

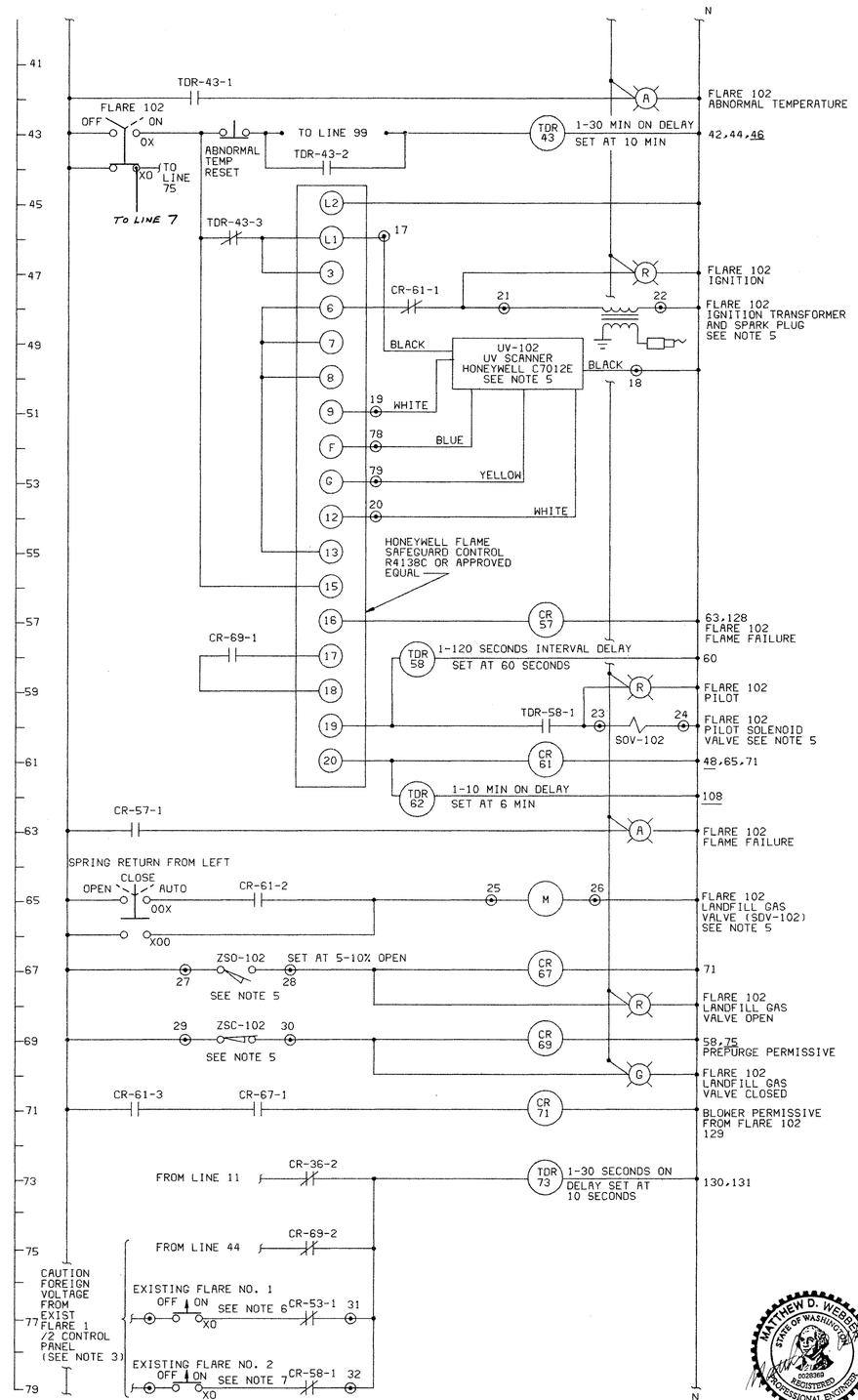

NOTES:

1. FOR ELECTRICAL LEGEND, ABBREVIATIONS AND GENERAL NOTES, SEE DWG E-1.
2. SEE CONTACT ON CORRESPONDING LINE NUMBER ON DWG NO. D-977-85-0021, SHEET 24.
3. THE CONTRACTOR SHALL FURNISH AND INSTALL A CAUTION TAG ON THE FRONT OF THE FLARE 101/102 CONTROL PANEL. THE TAG SHALL IDENTIFY DISCONNECT LOCATIONS FOR FOREIGN VOLTAGE SOURCES.
4. FOR FLARE 101/102 CONTROL PANEL LAYOUT, COMPONENT LISTS, NAMEPLATE SCHEDULE AND TERMINAL BLOCK DIAGRAMS, SEE DWG E-4.
5. DEVICE INDICATED WILL BE FURNISHED AND MOUNTED BY OTHERS. CONTRACTOR SHALL PROVIDE CONDUCTORS AND RACEWAY TO CONNECT THE DEVICE AS INDICATED ON THE DRAWINGS.
6. FOR CONTINUATION SEE LINE NUMBER 59 ON DWG NO. D-977-85-0021, SHEET 24.
7. FOR CONTINUATION SEE LINE NUMBER 60 ON DWG NO. D-977-85-0021, SHEET 24.

ARCHIVE NUMBER 0056179

MATTHEW D. WEBSTER STATE OF WASHINGTON 20283 REGISTERED PROFESSIONAL ENGINEER 1/14/92
EXPIRES 1/6/93

CAD DWG NO. E0000301/P
DATE 2-21-91
PLOT SCALE: 1=1

SCIENCE AND TECHNOLOGY CORP.
1201 Pacific Avenue
Suite 1100
Tacoma, Washington
98402-4301

NO	REVISION	DATE	APPD

FINAL CONSTRUCTION CHECKED BY AL
DATE 2/4/94
FIELD BOOKS

DATE 1-14-92	SCALE NONE
DESIGNED MDW	CHECKED RCT
DRAWN PVT	PROJ. ENGR. TSN

REFUSE UTILITY SUPERINTENDENT

BVWST
PROJECT NO. 40024

CITY OF TACOMA
DEPARTMENT OF PUBLIC WORKS

UTILITIES SERVICES ENGINEERING DIV. MANAGER
ASST. PUBLIC WORKS DIR./UTILITY SERVICES
DIRECTOR OF PUBLIC WORKS

TACOMA LANDFILL FLARE STATION UPGRADE
FLARE NO. 101/102 CONTROL PANEL SCHEMATIC SHEET 1 OF 2

AU 6911
DRAWING NO. E-2
SHEET NO. 9 OF 15

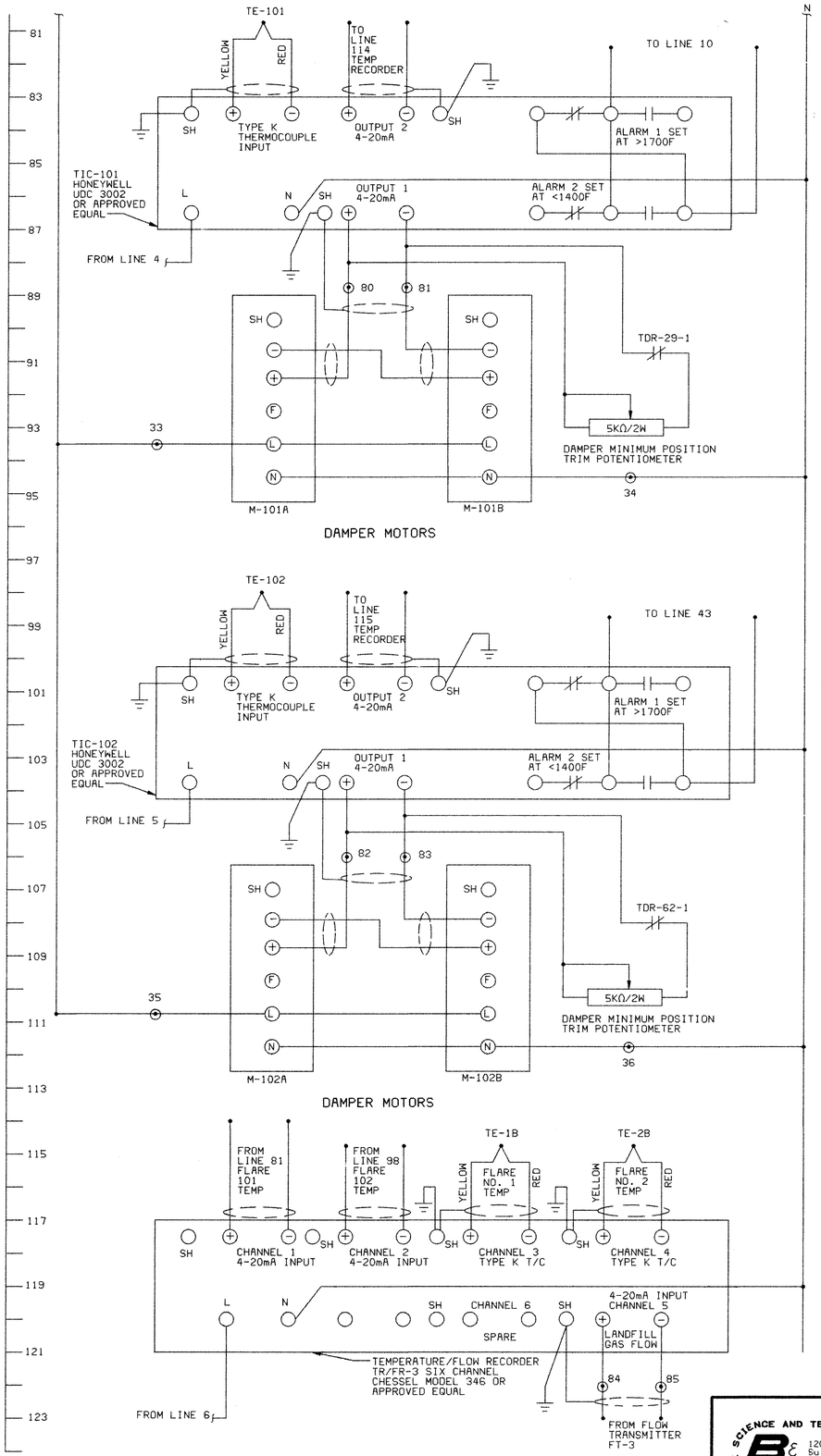

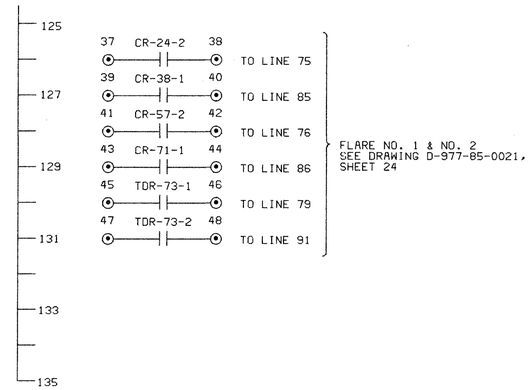

NOTES:

1. FOR ELECTRICAL LEGEND, ABBREVIATIONS AND GENERAL NOTES, SEE DWG E-1.

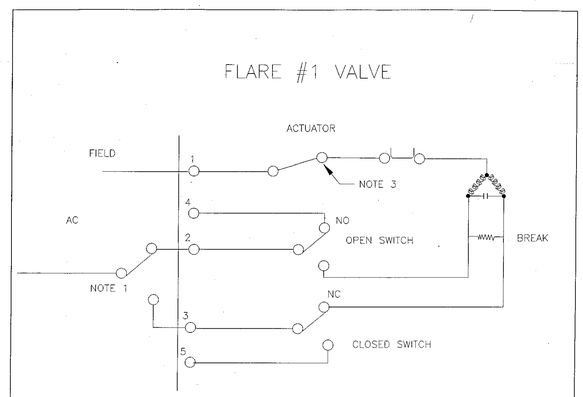

NOTES:

1. SWITCH SHOWN FOR ILLUSRATION ONLY
2. ACTUATOR SHOWN IN OPEN POSITION
3. MANUAL LOCKOUT SWITCH STANDARD
4. POWER TO TERMINAL 3 OPERATES UNIT TO CLOSE POSITION
5. POWER TO TERMINAL 2 OPERATES UNIT TO OPEN POSITION
6. WIRING FROM NORMALY OPEN CONTACTS OF THE SWITCHES IS PROVIDED FOR LIGHT INDICATION

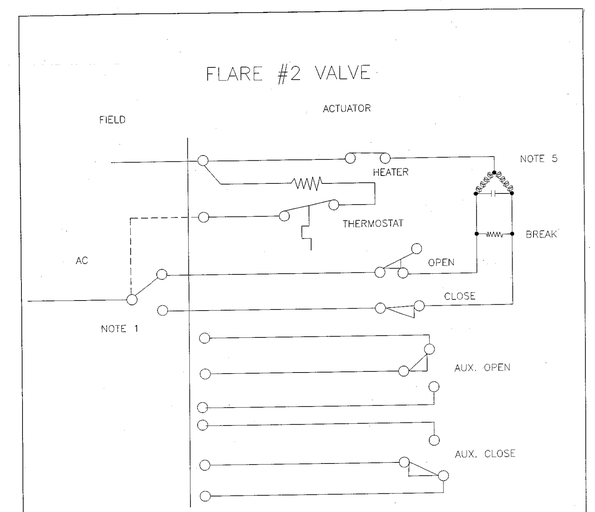

NOTES:

1. SWITCH SHOWN FOR ILLUSRATION ONLY
2. ACTUATOR SHOWN IN OPEN POSITION
3. POWER TO TERMINAL 2 WILL OPERATE UNIT TO OPEN POSITION
4. POWER TO TERMINAL 3 WILL OPERATE UNIT TO CLOSE POSITION
5. ENGAGEMENT OF MANUAL OVERRIDE DISABLES THE MOTOR ELECTRICALLY THRU MANUAL LOCKOUT SWITCH

MATTHEW D. WEBBER — STATE OF WASHINGTON — 20203000 — REGISTERED PROFESSIONAL ENGINEER — 1/14/92 — EXPIRES 1/6/93

ARCHIVE NUMBER 0056180

CAD DWG NO: E0000302/P
DATE: 1-23-92 PVT
PLOT SCALE: 1:1

BASE SCIENCE AND TECHNOLOGY CORP.
1201 Pacific Avenue
Suite 1100
Tacoma, Washington
98402-4301

NO	REVISION	DATE	APPD

FINAL CONSTRUCTION CHECKED BY AL DATE 2/4/94 FIELD BOOKS

DATE 1-14-92	SCALE NONE
DESIGNED MDW	CHECKED RCT
DRAWN PVT	PROJ. ENGR. TSN

REF. UTILITY SUPERINTENDENT

BVWST
PROJECT NO. 40024

CITY OF TACOMA
DEPARTMENT OF PUBLIC WORKS

UTILITIES SERVICES ENGINEERING DIV. MANAGER
ASSISTANT PUBLIC WORKS DIR./UTILITY SERVICES
DIRECTOR OF PUBLIC WORKS

TACOMA LANDFILL FLARE STATION UPGRADE
FLARE NO. 101/102 CONTROL
PANEL SCHEMATIC SHEET 2 OF 2

AUG911
DRAWING NO. E-3
SHEET NO. 10 OF 15

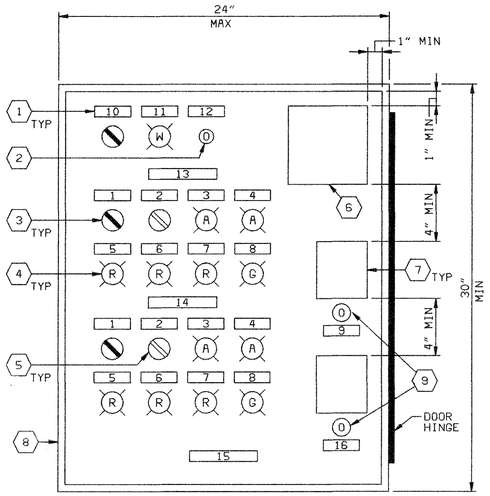

FRONT ELEVATION

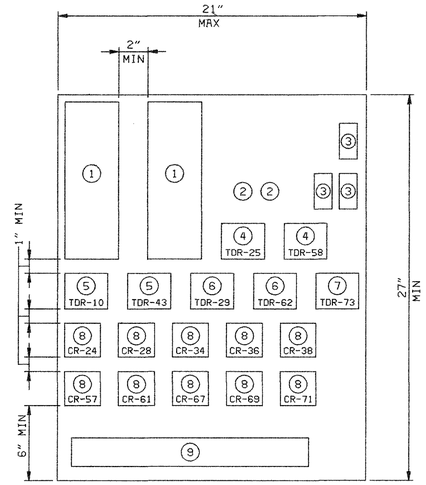

INTERIOR (BACK - PANEL) ELEVATION

FLARE STATION 101/102 CONTROL PANEL

SCALE: NONE
SEE NOTES 2 & 3

ENGRAVED NAMEPLATE SCHEDULE		
NO.	FIRST LINE	SECOND LINE
1	OFF-ON	—
2	LANDFILL VALVE	OPEN-CLOSE-AUTO
3	FLAME FAILURE	—
4	ABNORMAL TEMP	—
5	PILOT	—
6	IGNITION	—
7	LANDFILL GAS	VALVE OPEN
8	LANDFILL GAS	VALVE CLOSED
9	ABNORMAL TEMP RESET	TIC - 101
10	PANEL POWER	OFF - ON
11	PANEL POWER	ON
12	LAMP TEST	—
13	FLARE 101	—
14	FLARE 102	—
15	FLARE STATION 101/102	CONTROL PANEL
16	ABNORMAL TEMP RESET	TIC - 102

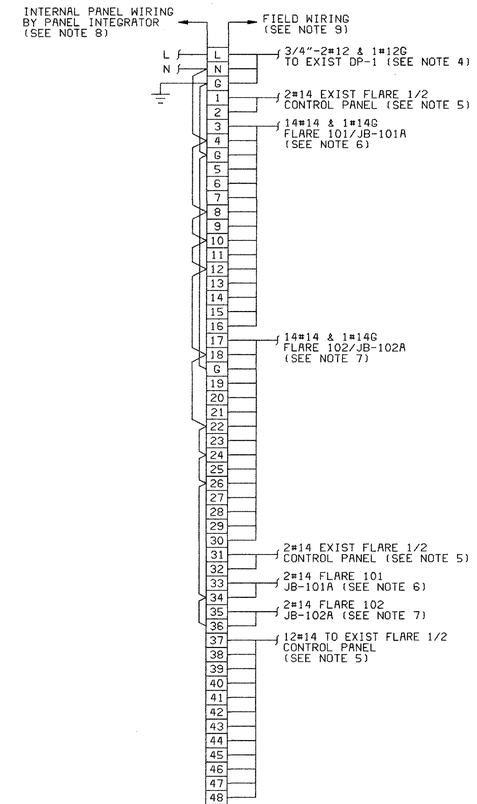

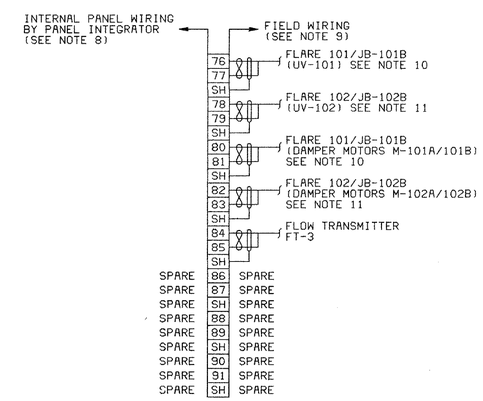

TERMINAL BLOCK DIAGRAMS

SCALE: NONE

NOTES:

1. FOR ELECTRICAL LEGEND, ABBREVIATIONS AND GENERAL NOTES, SEE DWG E-1.
2. SURFACE MOUNT CONTROL PANEL ON EXISTING METAL EQUIPMENT RACK LOCATED ON THE WEST WALL OF THE CONTROL BUILDING AS INDICATED ON DWG E-1.
3. FOR ADDITIONAL PANEL REQUIREMENTS, SEE SPEC SECTION 16050. FOR POWER AND CONTROL PLAN, SEE DWG E-1.
4. FOR DP-1 LOCATION, SEE DWG E-1. FOR DP-1 SCHEDULE, SEE DWG E-5.
5. FOR EXISTING FLARE 1/2 CONTROL PANEL LOCATION, SEE DWG E-1. FOR PANEL SCHEMATIC, SEE DWG D-977-85-0021 (SHEETS 24 AND 25). ROUTE CONDUCTORS BETWEEN THE EXISTING PANEL AND THE NEW FLARE 101/102 CONTROL PANEL IN A SINGLE 1-INCH RGS OR IMC RACEWAY.
6. FOR FLARE 101 (JB-101A) LOCATION, SEE DWG E-1. FOR JB-101A TERMINAL BLOCK DIAGRAM, SEE DWG E-5. ROUTE CONDUCTORS BETWEEN THE PANEL AND JB-101A IN A SINGLE 1-INCH RGS OR IMC RACEWAY.
7. FOR FLARE 102 (JB-102A) LOCATION, SEE DWG E-1. FOR JB-102A TERMINAL BLOCK DIAGRAM, SEE DWG E-5. ROUTE CONDUCTORS BETWEEN THE PANEL AND JB-102A IN A SINGLE 1-INCH RGS OR IMC RACEWAY.
8. FOR FLARE 101/102 CONTROL PANEL SCHEMATIC, SEE DWGS E-2 AND E-3.
9. CONDUCTORS SHALL BE AS SPECIFIED IN SPEC SECTION 16050. ANALOG SIGNAL CABLES SHALL BE BELDEN NO. 8720 OR APPROVED EQUAL. THERMOCOUPLE EXTENSION WIRE SHALL BE BELDEN NO. 1018A OR APPROVED EQUAL.
10. FOR JB-101B TERMINAL BLOCK DIAGRAM, SEE DWG E-5. ROUTE CABLES FROM PANEL TO JB-101B IN A SINGLE 1-INCH RGS OR IMC RACEWAY.
11. FOR JB-102B TERMINAL BLOCK DIAGRAM, SEE DWG E-5. ROUTE CABLES FROM PANEL TO JB-102B IN A SINGLE 1-INCH RGS OR IMC RACEWAY.

CONTROL PANEL FRONT COMPONENT LIST			
ITEM	QUANTITY	DESCRIPTION	SPEC SECTION/ DATA SHEET NO.
1	24	NAMEPLATE - SEE ENGRAVED NAMEPLATE SCHEDULE THIS DWG.	16050/-
2	1	PUSHBUTTON SWITCH - MOMENTARY TYPE, NORMALLY OPEN, FULL GUARD, BLACK PROTECTIVE BOOT, NEMA 4, SQUARE D KR1BH5 OR APPROVED EQUAL.	—
3	3	SELECTOR SWITCH - 2-POSITION MAINTAINED, STANDARD KNOB, PROTECTIVE BOOT, NEMA 4, MANUAL RETURN, SQUARE D TYPE K OR APPROVED EQUAL.	—
4	13	INDICATOR LIGHT, COLOR CAP AS INDICATED, 120V, TRANSFORMER TYPE, NEMA 4, SQUARE D TYPE K OR APPROVED EQUAL.	—
5	2	SELECTOR SWITCH - 3-POSITION, STANDARD KNOB, PROTECTIVE BOOT, NEMA 4, SPRING RETURN FROM LEFT TO CENTER, SQUARE D TYPE K OR APPROVED EQUAL.	—
6	1	STRIP CHART RECORDER, 100mm, SIX CHANNEL, CHESSELL MODEL 346 OR APPROVED EQUAL.	16050/7
7	2	TEMPERATURE INDICATING CONTROLLER, HONEYWELL UDC-3002 OR APPROVED EQUAL.	16050/6
8	1	ENCLOSURE - 16 GAUGE STEEL, 14 GAUGE STEEL DOOR, NEMA 12 WITH BACK-PANEL, DOOR HINGE ON RIGHT SIDE, APPROXIMATELY 30"H X 24"W X 24"D, HOFFMAN CATALOG NO. A-302424LP OR APPROVED EQUAL.	16050/-
9	2	PUSHBUTTON SWITCH - MOMENTARY TYPE, NORMALLY CLOSED, FULL GUARD, BLACK PROTECTIVE BOOT, NEMA 4, SQUARE D KR1BH6 OR APPROVED EQUAL.	—

CONTROL PANEL INTERIOR COMPONENT LIST			
ITEM	QUANTITY	DESCRIPTION	SPEC SECTION/ DATA SHEET NO.
1	2	FLAME SAFEGUARD SYSTEM, HONEYWELL R4138C1018 WITH SUBBASE, HONEYWELL S427D1007 PURGE TIMER, HONEYWELL R7247C1001 AMPLIFIER, OR APPROVED EQUAL.	16050/8
2	2	POTENTIOMETER WITH DIAL PLATE, NEMA 4, 2 WATTS, 5000 OHMS, VARIABLE RANGE, SQUARE D TYPE K2107 OR APPROVED EQUAL.	—
3	3	FUSE HOLDER - 250V, 30A, 1 POLE, SQUARE D TYPE FB1211 OR APPROVED EQUAL.	—
4	2	TIME DELAY RELAY, INTERVAL DELAY, RANGE 1-120 SECONDS, DPDT CONTACTS, OCTAL SOCKET, SQUARE D TYPE JCK OR APPROVED EQUAL	—
5	2	TIME DELAY RELAY, ON DELAY, RANGE 1-30 MINUTES, DPDT CONTACTS, OCTAL SOCKET, SQUARE D TYPE JCK OR APPROVED EQUAL.	—
6	2	TIME DELAY RELAY, ON DELAY, RANGE 1-10 MINUTES, DPDT CONTACTS, OCTAL SOCKET, SQUARE D TYPE JCK OR APPROVED EQUAL.	—
7	1	TIME DELAY RELAY, ON DELAY, RANGE 1-30 SECONDS, DPDT CONTACTS, OCTAL SOCKET, SQUARE D TYPE JCK OR APPROVED EQUAL.	—
8	10	CONTROL RELAY, GENERAL PURPOSE, DPDT CONTACTS, PLUG-IN, TUBULAR TERMINALS, OCTAL SOCKET, SQUARE D TYPE KP OR APPROVED EQUAL.	—
9		TERMINAL BLOCKS - HIGH DENSITY, STYLE H, #22-#12 AWG, TUBULAR SCREW TYPE WITH PRESSURE PLATE, 50 BLOCKS PER FOOT MAXIMUM, ALLEN-BRADLEY CATALOG NO. 1492-H1 OR APPROVED EQUAL. SEE TERMINAL BLOCK DIAGRAMS, THIS DRAWING.	—

ARCHIVE NUMBER 005181

MATTHEW D. WEBBER STATE OF WASHINGTON 20388 REGISTERED PROFESSIONAL ENGINEER
1/14/92
EXPIRES 1/6/93

SCIENCE AND TECHNOLOGY CORP.
1201 Pacific Avenue
Suite 1100
Tacoma, Washington
98402-4301

NO	REVISION	DATE	APPD

FINAL CONSTRUCTION CHECKED BY AL DATE 2/4/94
FIELD BOOKS

DATE 1-14-92	SCALE NONE
DESIGNED MDW	CHECKED RCT
DRAWN NLM	PROJ. ENGR. TSN

REF: UTILITY SUPERINTENDENT

BVWST
PROJECT NO. 40024

CITY OF TACOMA
DEPARTMENT OF PUBLIC WORKS

UTILITIES SERVICES ENGINEERING DIV. MANAGER
ASST. PUBLIC WORKS DIR./UTILITY SERVICES
DIRECTOR OF PUBLIC WORKS

TACOMA LANDFILL FLARE STATION UPGRADE
FLARE NO. 101/102
CONTROL PANEL LAYOUT

AUG911
DRAWING NO. E-4
SHEET NO. SHEET 11 OF 15

CAD DWG NO: E0000303
DATE: 1-30-92
PLOT SCALE: 1=1

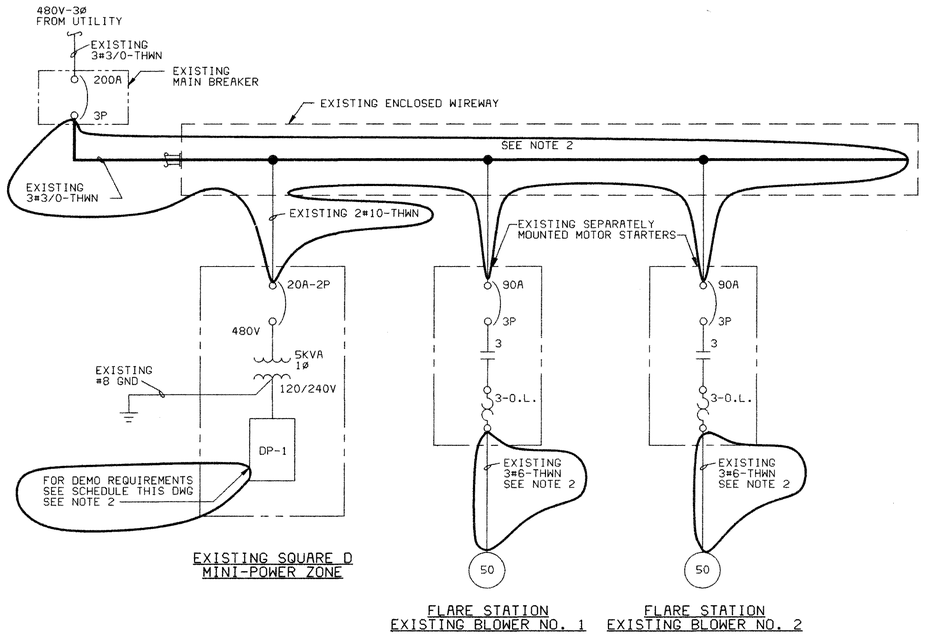

DEMOLITION
POWER ONE - LINE DIAGRAM
SEE NOTE 2

EXISTING PANELBOARD DP-1, SURFACE MOUNTED, 10,000 SYM. A.I.C. MIN. - AMP. MAIN LUGS (OR) 100 AMP. MAIN BREAKER W/ 30 AMP. TRIP 120/240 VOLTS, 1 PHASE, 3 WIRE, 100 AMP. MAINS									
POLE NO.	BKR. NO.	TRIP AMPS	NO. POLES	LOAD SERVED	POLE NO.	BKR. NO.	TRIP AMPS	NO. POLES	LOAD SERVED
1	1	15	1	FLARE 1/2 CONTROL PANEL	2	2	30	2	MAIN BREAKER
3	3	15	1	CONTROL BLDG LTG	4	-	-	-	
5	5	20	1	SPARE	6	4	15	1	NEW FLARE STATION LTG
7	7	15	1	FLARE 101/102 CONTROL PANEL	8	6	15 GFCI	1	CONTROL BLDG RECPT

DP-1 SCHEDULE
SEE NOTE 7

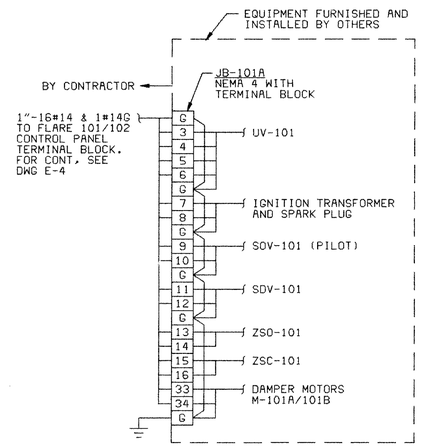

JUNCTION BOX JB-101A
TERMINAL BLOCK DIAGRAM

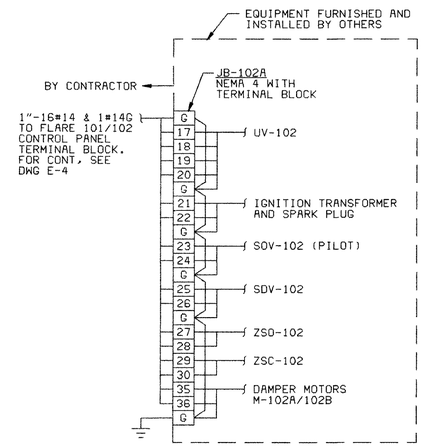

JUNCTION BOX JB-102A
TERMINAL BLOCK DIAGRAM

NOTES:

1. FOR ELECTRICAL LEGEND, ABBREVIATIONS AND GENERAL NOTES, SEE DWG E-1.
2. CIRCLED AREAS INDICATE DEMOLITION WORK TO BE PERFORMED BY THE CONTRACTOR. CONTRACTOR SHALL DISCONNECT, REMOVE AND DISPOSE OF ALL CIRCUIT CONDUCTORS AND RACEWAY MATERIALS WHERE INDICATED.
3. CIRCLED AREAS INDICATE NEW CONSTRUCTION WORK TO BE PERFORMED BY THE CONTRACTOR. CONTRACTOR SHALL FURNISH AND INSTALL ALL CIRCUIT CONDUCTORS, RACEWAY AND ASSOCIATED EQUIPMENT WHERE INDICATED.
4. EQUIPMENT FURNISHED AND INSTALLATIONS MADE WITHIN THIS AREA SHALL MEET THE REQUIREMENTS FOR A CLASS I, DIVISION 2, GROUP D HAZARDOUS AREA AS REQUIRED BY THE 1990 NEC.
5. PORTABLE EMERGENCY POWER SUPPLY, CIRCUIT CONDUCTORS, RACEWAY AND ASSOCIATED EQUIPMENT REQUIRED FOR THE EMERGENCY POWER SUPPLY SYSTEM WILL BE FURNISHED AND INSTALLED BY OTHERS.
6. FOR EQUIPMENT LOCATIONS, SEE DWG E-1. FOR TRANSFER SWITCH MOUNTING REQUIREMENTS, SEE DWG E-1.
7. EXISTING DP-1 IS A SQUARE D TYPE NQO PANELBOARD. THE CONTRACTOR SHALL VERIFY THE PANELBOARD SCHEDULE IN THE FIELD. ANY DISCREPANCIES NOTED BETWEEN FIELD CONDITIONS AND THE SCHEDULE INDICATED SHALL BE MADE KNOWN TO THE ENGINEER AND CONSULTANT PRIOR TO PERFORMING ANY WORK. LOADS ASSOCIATED WITH BREAKERS NO. 1, 3 AND 6 SHALL REMAIN AS IS AND BE FULLY OPERATIONAL UPON COMPLETION OF THIS WORK. EXISTING FLARE STATION LIGHTING ASSOCIATED WITH BREAKER NO. 4 LOCATED ON THE EXISTING FLARE STATION FOUNDATION (SEE DWG E-1) SHALL BE REMOVED (3 FLOODLIGHTS, 3 LIGHTING STANDARDS, ABOVE GRADE CONDUCTORS AND RACEWAY - BELOW GRADE CONDUCTORS AND RACEWAY SHALL BE ABANDONED IN PLACE). BREAKER NO. 4 SHALL SERVICE NEW FLARE STATION LIGHTING AS INDICATED ON THIS DRAWING AND DWG E-1. NEW BREAKER NO. 7 (SQUARE D CATALOG NO. QO115) SHALL BE FURNISHED AND INSTALLED BY THE CONTRACTOR TO SERVICE THE LOAD INDICATED.

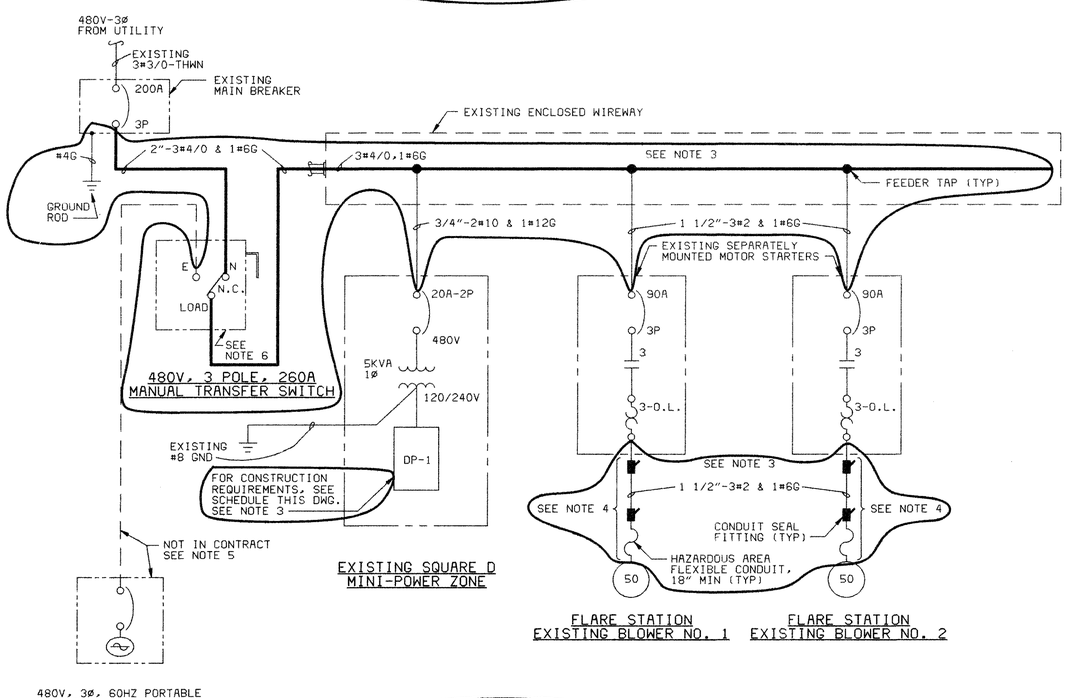

NEW CONSTRUCTION
POWER ONE - LINE DIAGRAM
SEE NOTES 3 & 6

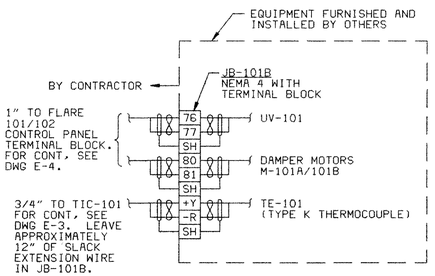

JUNCTION BOX JB-101B
TERMINAL BLOCK DIAGRAM

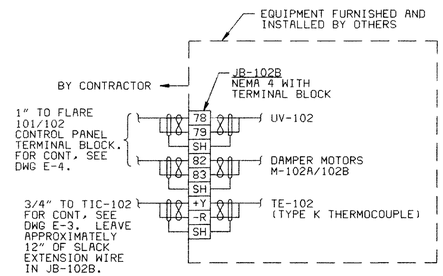

JUNCTION BOX JB-102B
TERMINAL BLOCK DIAGRAM

ARCHIVE NUMBER
0056182

MATTHEW D. WEBSTER
STATE OF WASHINGTON
REGISTERED
PROFESSIONAL ENGINEER
1/14/92
EXPIRES 1/6/93

SCIENCE AND TECHNOLOGY CORP.
1201 Pacific Avenue
Suite 1100
Tacoma, Washington
98402-4301

NO	REVISION	DATE	APPD

FINAL CONSTRUCTION CHECKED BY AL
DATE 2/4/94
FIELD BOOKS

DATE 1-14-92	SCALE NONE
DESIGNED MDW	CHECKED RCT
DRAWN TIA	PROJ. ENGR. TSN
REFUSE UTILITY SUPERINTENDENT	

BVWST
PROJECT NO. 40024

CITY OF TACOMA
DEPARTMENT OF PUBLIC WORKS
UTILITIES SERVICES ENGINEERING DIV. MANAGER
ASST. PUBLIC WORKS DIR./UTILITY SERVICES
DIRECTOR OF PUBLIC WORKS

TACOMA LANDFILL FLARE STATION UPGRADE
MISCELLANEOUS ELECTRICAL

AUG911
DRAWING NO. E-5
SHEET NO. SHEET 12 OF 15

CAD DWG NO: E0000304
DATE: 1-3-92 PVT
PLOT SCALE: 1=1

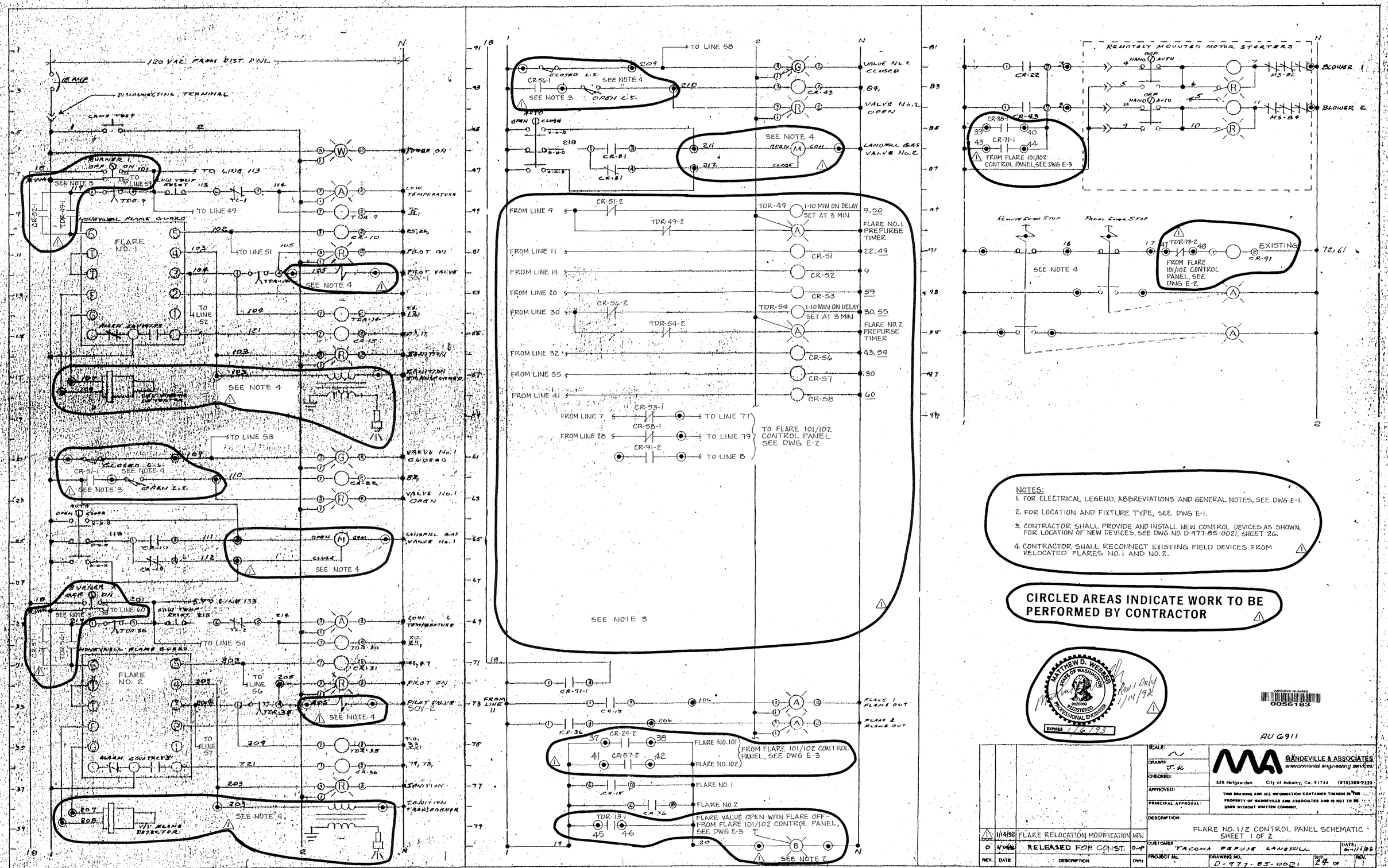

NOTES:

1. FOR ELECTRICAL LEGEND, ABBREVIATIONS AND GENERAL NOTES, SEE DWG E-1.
2. FOR LOCATION AND FIXTURE TYPE, SEE DWG E-1.
3. CONTRACTOR SHALL PROVIDE AND INSTALL NEW CONTROL DEVICES AS SHOWN. FOR LOCATION OF NEW DEVICES, SEE DWG NO. D-977-85-0021, SHEET 26.
4. CONTRACTOR SHALL RECONNECT EXISTING FIELD DEVICES FROM RELOCATED FLARES NO. 1 AND NO. 2.

CIRCLED AREAS INDICATE WORK TO BE PERFORMED BY CONTRACTOR

MATTHEW D. WEBBER — STATE OF WASHINGTON — 16031369 — REGISTERED PROFESSIONAL ENGINEER — EXPIRES 1/6/93

Rev 1 Only 1/14/92

ARCHIVE NUMBER 0056183

AU G911

REV.	DATE	DESCRIPTION	DWN
1	1/14/92	FLARE RELOCATION MODIFICATION	MDW
0	6/4/91	RELEASED FOR CONST.	D.A.P.

SCALE: ~
DRAWN: J.R.
CHECKED:
APPROVED:
PRINCIPAL APPROVAL:

MANDEVILLE & ASSOCIATES environmental engineering services
526 Hofgarden City of Industry, Ca. 91744 (818)369-2223

THIS DRAWING AND ALL INFORMATION CONTAINED THEREIN IS THE PROPERTY OF MANDEVILLE AND ASSOCIATES AND IS NOT TO BE USED WITHOUT WRITTEN CONSENT.

DESCRIPTION: FLARE NO. 1/2 CONTROL PANEL SCHEMATIC SHEET 1 OF 2

CUSTOMER: TACOMA REFUSE LANDFILL
DATE: 6-11-86
PROJECT No.
DRAWING NO. D-977-85-0021
SHT. 27 OF
REV. 1

CONSTRUCTED AS SHOWN

FILE X-G1

13 OF 15

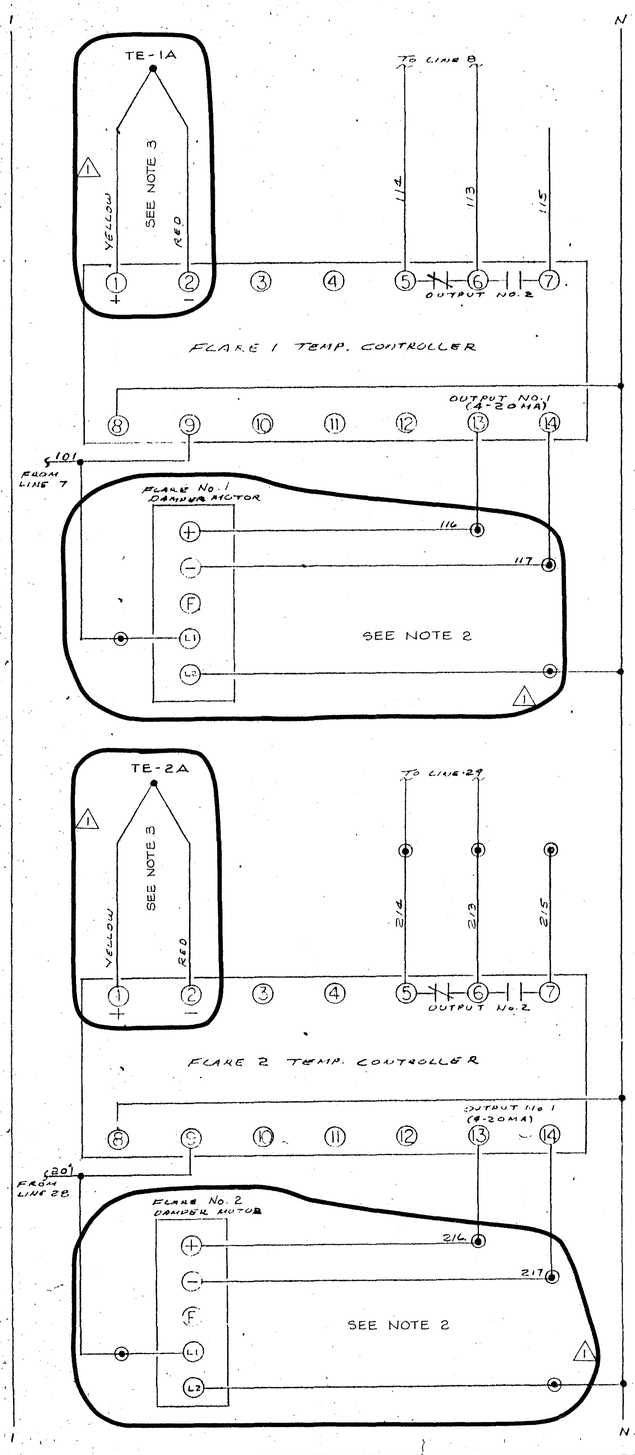

NOTES:

1. FOR ELECTRICAL LEGEND, ABBREVIATIONS AND GENERAL NOTES, SEE DWG E-1.
2. CONTRACTOR SHALL RECONNECT EXISTING FIELD DEVICES ASSOCIATED WITH RELOCATED FLARES NO. 1 AND NO. 2.
3. CONTRACTOR SHALL FURNISH AND INSTALL NEW DUAL-PROBE ELEMENT THERMOCOUPLES IN EXISTING FLARES NO. 1 AND NO. 2. THERMOCOUPLES SHALL BE AS SPECIFIED IN SPEC SECTION 15900 AND SHALL BE LOCATED AS SHOWN ON MECHANICAL DRAWINGS.

CIRCLED AREAS INDICATE WORK TO BE PERFORMED BY CONTRACTOR

MATTHEW D. WEBBER — STATE OF WASHINGTON — 20288 — REGISTERED PROFESSIONAL ENGINEER — EXPIRES 1/6/93

Rev 1 Only 1/14/92

ARCHIVE NUMBER 00561184

AU 6911

REV.	DATE	DESCRIPTION	
1	1/14/92	FLARE RELOCATION MODIFICATION	MDW
0	4/21/86	RELEASED FOR CONST.	

SCALE: ~
DRAWN: J. R.
CHECKED:
APPROVED:
PRINCIPAL APPROVAL:

MANDEVILLE & ASSOCIATES
environmental engineering services
525 Hacienda City of Industry, Ca. 91744 (818)369-2234

THIS DRAWING AND ALL INFORMATION CONTAINED THEREIN IS THE PROPERTY OF MANDEVILLE AND ASSOCIATES AND IS NOT TO BE USED WITHOUT WRITTEN CONSENT.

DESCRIPTION: FLARE NO. 1/2 CONTROL PANEL SCHEMATIC SHEET 2 OF 2

CUSTOMER: Tyrona Refuse Landfill
PROJECT NO.: DRAWING NO.: D-977-B3-0021 SHT. 25 OF

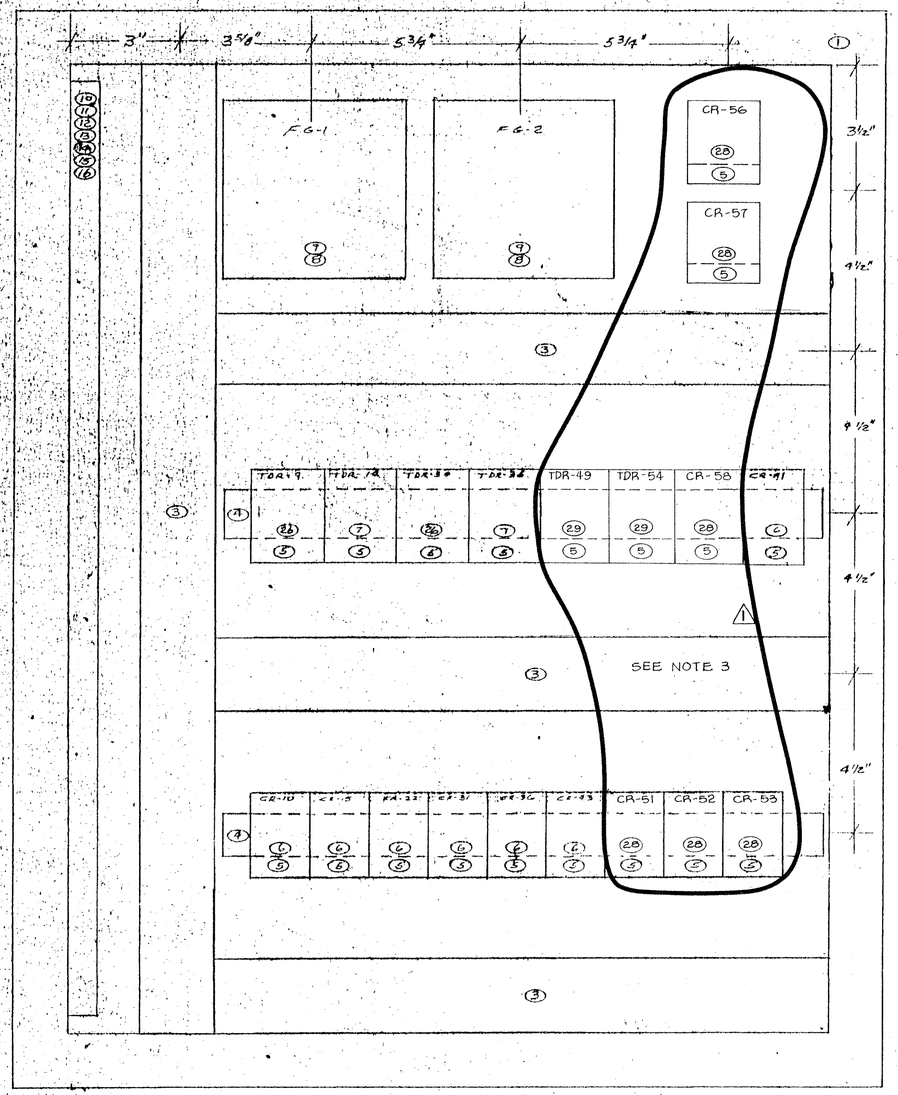

INTERIOR LAYOUT

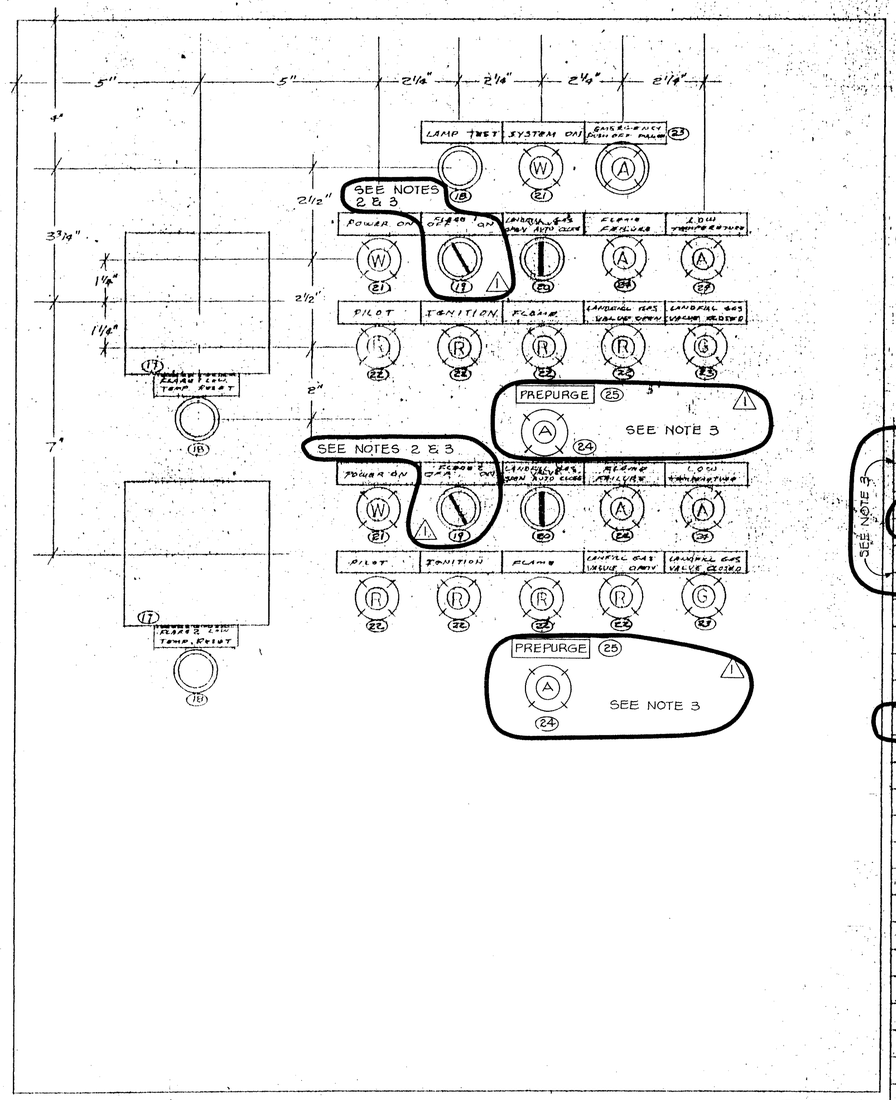

DOOR LAYOUT

NOTES:

1. FOR ELECTRICAL LEGEND, ABBREVIATIONS AND GENERAL NOTES, SEE DWG E-1.
2. CONTRACTOR SHALL REPLACE EXISTING SWITCH WITH NEW SWITCH AS INDICATED.
3. CONTRACTOR SHALL PROVIDE AND INSTALL NEW DEVICES AS INDICATED. PROVIDE MANUFACTURER SHOWN OR APPROVED EQUAL. DEVICES SHALL BE CONNECTED AS SHOWN ON DWG NO. D-977-85-0021, SHEET 24.

ITEM	DESCRIPTION	MANUFACTURER	CATALOG No.	QTY.
29	ON DELAY RELAY	SQUARE D	TYPE JCK 16 W/OCTAL SOCKET	2
28	DPDT RELAY	SQUARE D	TYPE KP W/OCTAL SOCKET	6
27	ILLUM. PUSH/PULL UNIT	ALLEN BRADLEY	800T-EXP16AA1	1
26	T.D. RELAY	POTTER & BRUMFIELD	CG838-70010M	2
25	ENGRAVED NAMEPLATE	CUSTOM	3/4" x 2 1/2" BLACK STICKING WHT W/BLK LETTERS	27
24	AMBER PILOT LIGHT	ALLEN BRADLEY	800T-PDT16A	6
23	GREEN PILOT LIGHT		800T-PDT16G	2
22	RED PILOT LIGHT		800T-PDT16R	8
21	WHITE PILOT LIGHT		800T-PDT16W	3
20	3 POS. SWITCH		800T-J2HC7B	2
19	2 POS. SWITCH SEE NOTES 2 & 3		800T-H2A	2
18	PUSH BUTTON	ALLEN BRADLEY	800T-A2D1	3
17	TEMPERATURE CONTROLLER	OMEGA	4002KF-F	2
16	TERMINAL JUMPER	ALLEN BRADLEY	1492-N13	6
15	END ANCHOR		1492-N23	2
14	END BARRIER		1492-N17	1
13	CONTROL DISCONNECT		1492-C69	1
12	TERMINALS		1492-F1	70
11	STAND-OFFS		1492-N25	3
10	TERMINAL MKTS. CHNG.	ALLEN BRADLEY	1492-N22	27"
9	MOUNTING BASE	HONEYWELL	Q270	2
8	FLAME GUARD	HONEYWELL	RA890G-1260	2
7	T.D. RELAY	POTTER BRUMFIELD	CD838-70005	4
6	DPDT RELAY		KRPA11AG-120VAC	7
5	OCTAL SOCKET		27E891	11
4	DIN RAIL	POTTER BRUMFIELD	24A110	33"
3	PLASTIC WIREWAY	PANDUIT	2"x2" W/COVER	70"
2	PANEL	HOFFMAN ENG.	A30P24	1
1	ENCLOSURE	HOFFMAN ENG.	A30241OLP	1

BILL OF MATERIAL AU 6911

SEE NOTE 3

MATTHEW D. WEBSTER
STATE OF WASHINGTON
REGISTERED PROFESSIONAL ENGINEER
EXPIRES 1/6/93
Rev 1 Date 1/14/92

CIRCLED AREAS INDICATE WORK TO BE PERFORMED BY CONTRACTOR

TERMINAL STRIP LAYOUT

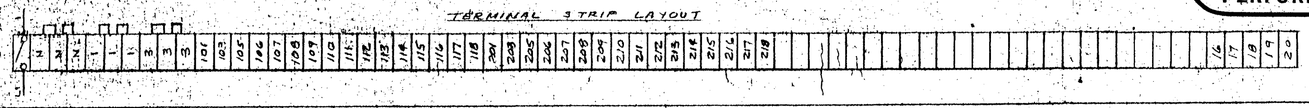

ARCHIVE NUMBER 0056185

REV	DATE	DESCRIPTION	DWN
1	1/14/92	FLARE RELOCATION MODIFICATION	MDA
0	4/1/86	RELEASED FOR CONST.	

SCALE: 1/2"=1'-0"
DRAWN: J.S.R.
CHECKED:
APPROVED:
PROJECT APPROVAL:

MANDEVILLE & ASSOCIATES
environmental engineering services
525 Hotgarden City of Industry, CA. 91744 (818)369-2224

THIS DRAWING AND ALL INFORMATION CONTAINED THEREON IS THE PROPERTY OF MANDEVILLE AND ASSOCIATES AND IS NOT TO BE USED WITHOUT WRITTEN CONSENT.

DESCRIPTION: FLARE NO. 1/2 CONTROL PANEL LAYOUT

CUSTOMER: LANDFILL GAS USE ANALYSIS
DATE: 2-3-86
PROJECT NO.
DRAWING NO. D-977-85-0021
SHT. 26 OF
REV. 1