CITY OF TACOMA

ENVIRONMENTAL SERVICES DEPARTMENT

ADDENDUM NO.1 **DATE:** 12/11/17

REVISIONS TO:
Request for Bids Specification No. ES17-0237F
TREE REMOVAL, PRUNING, AND PLANTING

NOTICE TO ALL BIDDERS:

This addendum is issued to clarify, revise, add to or delete from, the original specification documents for the above project. This addendum, as integrated with the original specification documents, shall form the specification documents. The noted revisions shall take precedence over previously issued specification documents and shall become part of this contract.

REVISIONS TO THE SUBMITTAL DEADLINE:
The submittal deadline remains the same.

REVISIONS TO THE GENERAL INFORMATION AND REQUIREMENTS:

Replace the Section Title Part VII CITY OF TACOMA – SMALL BUSINESS ENTERPRISE PROGRAM with the following: PART **IV** CITY OF TACOMA – SMALL BUSINESS ENTERPRISE PROGRAM

Replace the Section Title Part VIII STATE PREVAILING WAGE RATES with the following: PART **V** STATE PREVAILING WAGE RATES

REVISIONS TO THE SPECIAL PROVISIONS:

Replace Division 2 Earthwork in its entirety with the attached Division 2 Earthwork.

Add Appendix A, City of Tacoma and WSDOT Standard Plans as attached.

NOTE: Acknowledge receipt of this addendum by initialing the corresponding space as indicated on the signature page. Vendors who have already submitted their bid/proposal may contact the Purchasing Division at 253-502-8468 and request return of their bid/proposal for acknowledgment and re-submittal. Or, a letter acknowledging receipt of this addendum may be submitted in an envelope marked Request for Bids Specification No. ES17-0237F Addendum No. 1. The City reserves the right to reject any and all bids, including, in certain circumstances, for failure to appropriately acknowledge this addendum.

cc: Aris Efting, Environmental Services Science and Engineering

DIVISION 2 EARTHWORK

2-01 CLEARING, GRUBBING, AND ROADSIDE CLEANUP (******)

2-01.1 Description
The first sentence of the first paragraph is revised to read:

The Contractor shall clear, grub (upon request), and clean up all debris each day before the work crew leaves a site, unless permission is given by the City to do otherwise. All streets and sidewalks shall be swept and all debris caused by the work performed shall be removed from the site. In the case of dispute, the City may remove the debris and charge the cost to the Contractor, as the City shall determine to be just.

Definitions

Clearing
The removal of trees, shrubs, stumps, and rubbish from a site.
Grubbing
To pull up roots and stumps from below the ground.

This section is supplemented with the following:

2-01.2 Disposal of Usable Material and Debris
The section is revised to read:

Wood disposal may or may not apply to each tree removal or tree pruning and will be at the direction of the City per project.

It shall be the responsibility of the Contractor to remove and dispose of all logs, brush, chips and debris resulting from the tree removal and pruning operations, if applicable as directed by the City, in the manner described here:

1. No wood or brush may be left on City right-of-way overnight.

2. As much wood as is possible shall be chipped on site, into pieces no larger than 3”.

3. Any wood that is too large to be put through a chipper must be disposed of on the same day it is cut. Any wood determined to need disposal shall be disposed of at Tacoma’s Landfill at 3510 S. Mullen St, Tacoma, WA.

Diseased Wood Disposal – Diseased elm wood and other diseased wood must be handled carefully to prevent the spread of Dutch Elm Disease and other tree diseases. It shall be the responsibility of the Contractor to remove and dispose of all logs, brush, chips and debris resulting from the tree removal operations in the manner described here:

1. No diseased wood or brush may be left on City right of way overnight.

2. As much wood as is possible shall be chipped on site, into pieces no larger than 3”. Chips from diseased elms do not spread the disease and may be handled and disposed the same as chips from non-diseased wood.

3. Any wood that is too large to be put through a chipper must be disposed of on the same day it is cut, delivered to and disposed of at the City Landfill at 3510 S. Mullen St, Tacoma, WA. Diseased wood may also be disposed of at other public or private agencies equipped to properly handle the wood and provide disposal documentation.

4. The Contractor must contact the City landfill a minimum of 24 hours prior to disposing of diseased wood. Other disposal facilities may have similar notification timeframes. The Contractor must provide copies of receipts or proof of proper wood disposal to the contract administrator (contact information provided after award) before any payments will be made under this Contract.

END OF SECTION

2-14 TREE REMOVAL
(******)

2-14.1 Description

The work performed shall be removing trees and/or stumps that are dead, diseased, and/or high risk trees.

2-14.2 Definitions

Artificial Snag – a tree that has been cut to resemble a standing, dead or dying tree
Bucker- a person who cuts felled, and de-limbed trees into logs
Bucket Truck - a truck equipped with an extendable, hydraulic boom carrying a large bucket for raising workers to elevated, inaccessible areas
Certified Arborist – an ISA Certified Arborist® having met all requirements to be eligible for the exam, which includes three or more years of full-time, eligible, practical work experience in arboriculture and/or a degree in the field of arboriculture, horticulture, landscape architecture, or forestry from a regionally accredited educational institution
Chipper- a person with the qualifications and knowledge to operate power tools and equipment to grind logs and limbs into wood chips
Faller- a person who fells trees using sound forestry practices through the use of hand-held chainsaws and other felling machines
Laborer- a person in the construction trade, typically performing unskilled labor
Root Crown – that part of the root system from which a stem arises
Stump grinder- a person with the qualifications and knowledge to operate power tools and equipment to remove tree stumps

Tree- any self-supporting, woody perennial plant having a main stem (trunk) and which normally attains a height of at least ten (10) feet at maturity, usually with one (1) main stem or trunk and many branches

2-14.3 Construction Requirements

All removal practices and standards shall conform to the latest revision of ANSI A300, “Standard Practices for Trees, Shrubs and Other Woody Plant Maintenance”, and ANSI Z133.1 “American National Standard for Arboricultural Operations - Safety Requirements,” available from the American National Standards Institute, the National Arborist Association, or the International Society of Arboriculture. Where the standards or practices of ANSI A300 differ from those listed in these specifications, the standards and practices in these specifications shall apply.

1. Tree Removal Type 1

Stumps shall always be ground in Type 1 removals. Stump removal means the removal of the stump to a minimum of 8” below the grade of the walk and curb, including the root crown that affects the construction of a new sidewalk or landscaping. All stump grinding debris shall be removed by Contractor and topsoil shall be applied to fill the hole left by the stump in a manner that is level with existing grade upon settling. Soil shall be provided by the City, however it is the responsibility of the contractor to transport the soil.

2. Removal Type 2

Type 2 removals shall <u>not</u> include stump grinding and the wood may be left on site, as specified by the City. Any wood left on site shall be left in direct contact with the soil to eliminate fire hazards. Type 2 removals may require reduction in tree height, rather than complete removal, to create an artificial snag. Artificial snags shall be cut to appear like a natural break; no clean cuts will be accepted.

2-14.4 Measurement

Tree removal shall be paid by the hour for work performed by a faller, bucker, laborer, stump grinder, chipper, and certified arborist. Pricing is to include all labor, consulting, equipment, and materials required including but not limited to chainsaw, personal protection equipment, fuel etc., unless otherwise specified, to perform the work in accordance with this contract and the directions of the City. All removals must follow proper disposal of materials as approved by the City (see 2-01.2).

Bucket truck pricing is paid in half-day (4 hour) increments, and includes all labor, equipment, and materials required including but not limited to personal protection equipment, fuel, vehicle maintenance, etc.

Mobilization fees shall be paid daily and include all travel for all employees, equipment (excluding bucket trucks) and materials to and from a site on a work day. Travel time to assess a site and/or provide cost estimates is not considered mobilization. Only one mobilization fee shall apply per day, regardless if the contractor works at more than one

location within Tacoma city limits. The contractor shall be paid an additional mobilization fee if s/he is requested to re-mobilize during normal business hours.

2-14.5 Payment
Payment shall be made in accordance with section 1-04.1.

“Faller”, per hour

“Bucker”, per hour

“Stump Grinder”, per hour

“Chipper”, per hour

“Certified Arborist”, per hour

“Bucket Truck”, per 4 hours

“Mobilization”, per one (1) work day

2-15 TREE PRUNING
(******)

2-15.1 Description

The work performed shall be pruning trees to reduce the risk or prevent hazardous trees.

2-15.3 Construction Requirements

All pruning practices and standards shall conform to the latest revision of ANSI A300, “Standard Practices for Trees, Shrubs and Other Woody Plant Maintenance”, and ANSI Z133.1 “American National Standard for Arboricultural Operations - Safety Requirements,” available from the American National Standards Institute, the National Arborist Association, or the International Society of Arboriculture. Where the standards or practices of ANSI A300 differ from those listed in these specifications, the standards and practices in these specifications shall apply.

2-15.3(1) Pruning Practices

All branches shall retain their natural hierarchical character after pruning (large limb small branch-twig). Tipping or stub cutting shall be considered destruction of property, and trees so damaged shall be repaired or replaced by Contractor at his/her expense as per the Protection of Property section of this Contract.

All cuts shall be made as close as possible to the trunk or parent limb, without cutting into the branch collar (flush cutting) or leaving a protruding stub. Bark at the edge of all pruning cuts shall remain firmly attached.

All branches too large to support with one hand shall be notched on the underside and precut to avoid splitting or tearing of the bark.

Any loose bark at trunk or branch wounds shall be cut off close to the wood.

No paints or wound dressings of any kind are to be applied.

Utmost care shall be taken by Contractor to avoid damage to tree trunks and limbs. No climbing spurs or spikes of any kind shall be used. All ladders, lift equipment and saw blades shall be utilized in a manner as to prevent damage to the tree. Flush cuts shall be considered trunk damage and shall not be permitted. Repeated use of flush cuts or other damage to live wood shall be just cause for the City to terminate this Contract and may result in tree replacement by Contractor at his/her expense as per the Protection of Property section of this Contract.

Trees with major defects or extensive decay or damage shall be reported to the City,and shall not be pruned prior to obtaining the expressed approval of the City. Obvious girdling roots or signs of insect or disease infestation shall be reported to the City, either before or after pruning.

2-15.3(2) Pruning Standards (Execution)

No more than 20% of the live, leaf-bearing crown shall be removed from any tree, except where cracked limbs or obstructed traffic signs or signals pose a hazard to public safety.The priority of pruning cuts shall be made in the manner described here:

a. **Crown Cleaning**: All dead, dying, diseased, decaying, and cracked branches shall be removed.

b. **Clearance & Visibility**:
   i. All street signs, traffic signs and signals shall be cleared, regardless of leaf crown removal restrictions. Stop signs and traffic signals must be visible to drivers from 250 feet away.

   ii. Where practical, limbs blocking business signs or street lights may be shortened or removed, always cutting back to a limb that is no more than 1½ times the diameter of the removed branch.

c. **Crown Raising**: The lowest limbs shall be removed to improve pedestrian and vehicle clearance beneath the tree, to 8 feet above the sidewalk and 14 feet above the street. However, no more than 1/3 of any tree's height shall have the trunk cleaned of all limbs, except where such condition existed prior to this contract. Where pruning is necessary to improve clearance and where limb removal would violate the 1/3 height rule (such as on newly planted trees), lowest limbs should be shortened to 1/2 or 1/3 their original length to the nearest lateral.

d. **Structural Pruning**:
   i. The weaker or less desirable of co-dominant stems shall be removed if it is less than 3" in diameter. Where such co-dominants are more than 3" in diameter, the weaker or less desirable branch shall be stunted by cutting back to about 1/3 of its length, to a point where a smaller branch originates.

ii. The weaker or less desirable of crossed branches shall be removed, unless such removal will leave large open spaces in the crown. Overlong limbs (maximum 2 per tree) may be shortened, always cutting back to a limb that is no more than 1½ times the diameter of the remaining branch.

2-15.3(3) Tree Damage

Climbing irons, spurs or spikes shall not be used on trees to be pruned. Use of such devices and any pruning performed contrary to the Technical Specifications of this specification shall be considered damage to trees. Any tree damage caused by the Contractor shall be repaired immediately, at no additional expense and to the satisfaction of the City. Trees damaged beyond repair, as judged by a qualified arborist acceptable to the City and the Contractor (whose expenses shall be jointly covered by both parties), are to be removed at no expense to the City. Each damaged tree shall be replaced, at no expense to the City, by a tree of size and species designated by the City. Should a replacement be unavailable, the dollar value of such damaged trees shall be paid to the City. The value of such trees shall be determined by a qualified arborist, acceptable to the City and the Contractor, (whose expenses shall be jointly covered by both parties) shall be deducted from the monies owed the Contractor.

2-15.4 Measurement

Tree pruning shall be paid by the hour for work performed by a faller, bucker, laborer, chipper, and certified arborist. Pricing is to include all labor, consulting, equipment, and materials required including but not limited to chainsaw, personal protection equipment, fuel etc., unless otherwise specified, to perform the work in accordance with this contract and the directions of the City. All pruning must follow proper disposal of materials as approved by the City.

Bucket truck pricing is paid in half-day (4 hour) increments, and includes all labor, equipment, and materials required including but not limited to fuel, vehicle maintenance, etc.

Mobilization fees shall be paid daily and include all travel for all employees, equipment (excluding bucket trucks) and materials to and from a site on a work day. Travel time to assess a site and/or provide cost estimates is not considered mobilization. Only one mobilization fee shall apply per day, regardless if the contractor works at more than one location within Tacoma city limits. The contractor shall be paid an additional mobilization fee if s/he is requested to re-mobilize during normal business hours.

2-15.5 Payment
Payment shall be made in accordance with section 1-04.1.

“Faller”, per hour

“Bucker”, per hour

“Chipper”, per hour

“Certified Arborist”, per hour

“Bucket Truck”, per 4 hours

“Mobilization”, per one (1) work day

2-16 TREE PLANTING
(******)

2-16.1 Description

The work performed shall be planting trees.

2-16.3 Construction Requirements

All planting practices and standards shall conform to the latest revision of ANSI A300, “Standard Practices for Trees, Shrubs and Other Woody Plant Maintenance”, and ANSI Z133.1 “American National Standard for Arboricultural Operations - Safety Requirements,” available from the American National Standards Institute, the National Arborist Association, or the International Society of Arboriculture. Where the standards or practices of ANSI A300 differ from those listed in these specifications, the standards and practices in these specifications shall apply.

See Appendix A, Standard Plan Numbers 1-4 for detailed specifications regarding street tree planting (LS-01), street tree clearance (LS 02), tree well dimensions (LS-03), and tree planting on slopes (LS-04). See Appendix A, Standard Plan Numbers GSI-01b and GSI-01d for detailed specifications on Post Construction Soil Quality and Depth Option 2 (Amend in Place) and Option 3 (Imported Topsoil).

2-16.3(1) Planting Practices

Tree planting size may vary from 1.5-3-inch caliper deciduous trees and 5-8- foot high coniferous trees. All plant materials will be provided by the City.

Handling of the plant material for short distance relocation or transport shall be done by the root ball or container. The plant material shall not be lifted or handled by the trunk or branches.

Plant materials shall not be transplanted during freezing weather or while the ground is frozen. Plant materials shall not be transplanted during excessively wet conditions, or during unsuitable soil or weather conditions. Unsuitable conditions include but are not limited to standing water, high winds, heavy rains, and high water levels.

Trees supplied in containers shall not be removed from the containers until the time of planting at the planting location, unless cleaned of all soil at another site and transported with the roots kept sufficiently moist and minimal exposure to air.

All burlap, baskets, string, wire, excess soil and other such materials shall be removed from the hole (and tree) before transplanting. The plant material shall be handled in such a manner that the root systems are kept covered and damp at all times. The root systems of all bare root plant material shall be soaked in water for one hour immediately prior to transplanting

In their final position, all plants shall have their top true root (not adventitious root) *no more than 1-inch below the soil surface, no matter where that root was located in the original root ball or container.* The backfill material and root ball shall be thoroughly watered immediately following transplanting regardless of season.

2-16.3(2) Planting Standards (Execution)

The hole size for tree transplanting shall be twice as wide and equal in depth to the root system. Any glazed surface of the hole shall be removed by hand methods. Scarify the bottom of the planting pit to a depth of four inches. If groundwater is encountered upon excavation of the planting holes, the Contractor shall promptly notify the City.

Plant materials shall be removed from containers in a manner that prevents unnecessary damage to the root system. Containers may require vertical cuts down the depth of the container to accommodate removal.

a. Soak the root ball to remove all excess soil from the root mass.

b. Remove or straighten (as applicable) all circling and girdling, damaged, adventitious, and tangled roots from the root system with sterile, sharp hand pruners. No more than 15% of the root mass shall be removed.

c. Set plant material upright, plumb, and faced with the lowest branches away from the street, or area of highest activity if there is no adjacent street.

d. All packaging, including but not limited to burlap, wire baskets, tape, twine, trunk wrap, tags and labels are to be removed from all plant materials prior to transplanting. Sterile and sharp hand pruners, scissors, or knives shall be used to remove packaging in a manner that will not cause injury to plant materials. Packaging is not to be ripped or torn from plant materials.

e. Roots shall be spread and arranged in their natural alignment, and shall not be bunched, curled, twisted, or unreasonably bent when placed in the prepared hole. No filling will be permitted around trunks or stems or above graft unions on grafted trees.

f. Soil material shall be gauged by the bottom of the trunk flare (top of root crown) at finished grade.

g. Backfill the planting hole with the soil provided by the City. Do not use frozen or muddy soil for backfilling. Backfill around roots in layers while gently tamping to settle soil and eliminate voids and air pockets.

h. When planting pit is approximately one-half filled, water thoroughly before placing remainder of backfill. Repeat watering until no more water is absorbed. Form a ring of soil around the planting pit to retain water.

2-16.3(3) Staking

Stake all deciduous and evergreen trees immediately after planting as specified in Appendix A, Standard Plan Numbers LS-01and LS-04.

2-16.3(4) Mulching

Arborist Wood Chip Mulch shall be coarse ground wood chips (approximately ½-inch to 4-inch along the longest chip dimension) derived from the mechanical grinding of whole trees or portions of trees. It may contain wood, wood fiber, roots, bark, branches and leaves, but may not contain visible amounts of soil. It shall be free of weeds and weed seeds, and may not contain more than 1% by weight of manufactured inert material (plastic, concrete, ceramics, metal, etc.). Mulch shall be provided by the City, however it is the responsibility of the contractor to transport the mulch.

Apply 3 to 4 inches (settled) average thickness of mulch over whole surface of transplanting area. Taper mulch at the base of the tree as to not pile up any mulch against the trunk. Thoroughly water mulched areas. After watering, rake mulch to create a uniform finished surface.

2-16.4 Measurement

Tree planting shall be paid per one (1) tree planted. Pricing is to include all labor, consulting, equipment, and materials required including but not limited personal protection equipment, shovels, fuel etc., unless otherwise specified, to perform the work in accordance with this contract and the directions of the City. All pruning must follow proper disposal of materials as approved by the City.

Mobilization fees shall be paid daily and include all travel for all employees, equipment and materials to and from a site on a work day. Travel time to assess a site and/or provide cost estimates is not considered mobilization. Only one mobilization fee shall apply per day, regardless if the contractor works at more than one location within Tacoma city limits. The contractor shall be paid an additional mobilization fee if s/he is requested to re-mobilize during normal business hours.

2-16.5 Payment

Payment shall be made in accordance with section 1-04.1.

“Certified Arborist”, per hour

“Tree Planting”, per tree

“Mobilization”, daily lump sum

Appendix A

NOTES:

1. Planting includes removal of stakes one year after installation.
2. Shape soil surface to provide 4' dia watering ring.
3. Tree clearance shall be per STD PLAN LS-02.
4. See STD PLAN LS-03 for tree well dimension detail.
5. Root barriers shall be an injection molded or extruded modular component made of high density polypropylene or polyethylene plastic. 18" depth x 10' length root barrier is required along edge of roadways, curbs, driveways, trails, sidewalks, or other structures where root ball is within 4 feet. install root barrier for newly planted trees only.

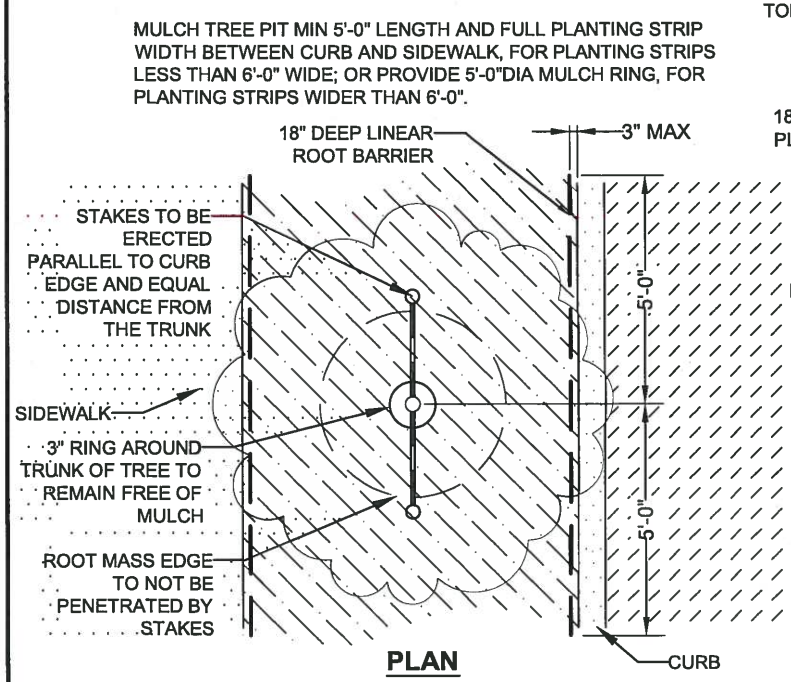

PLAN

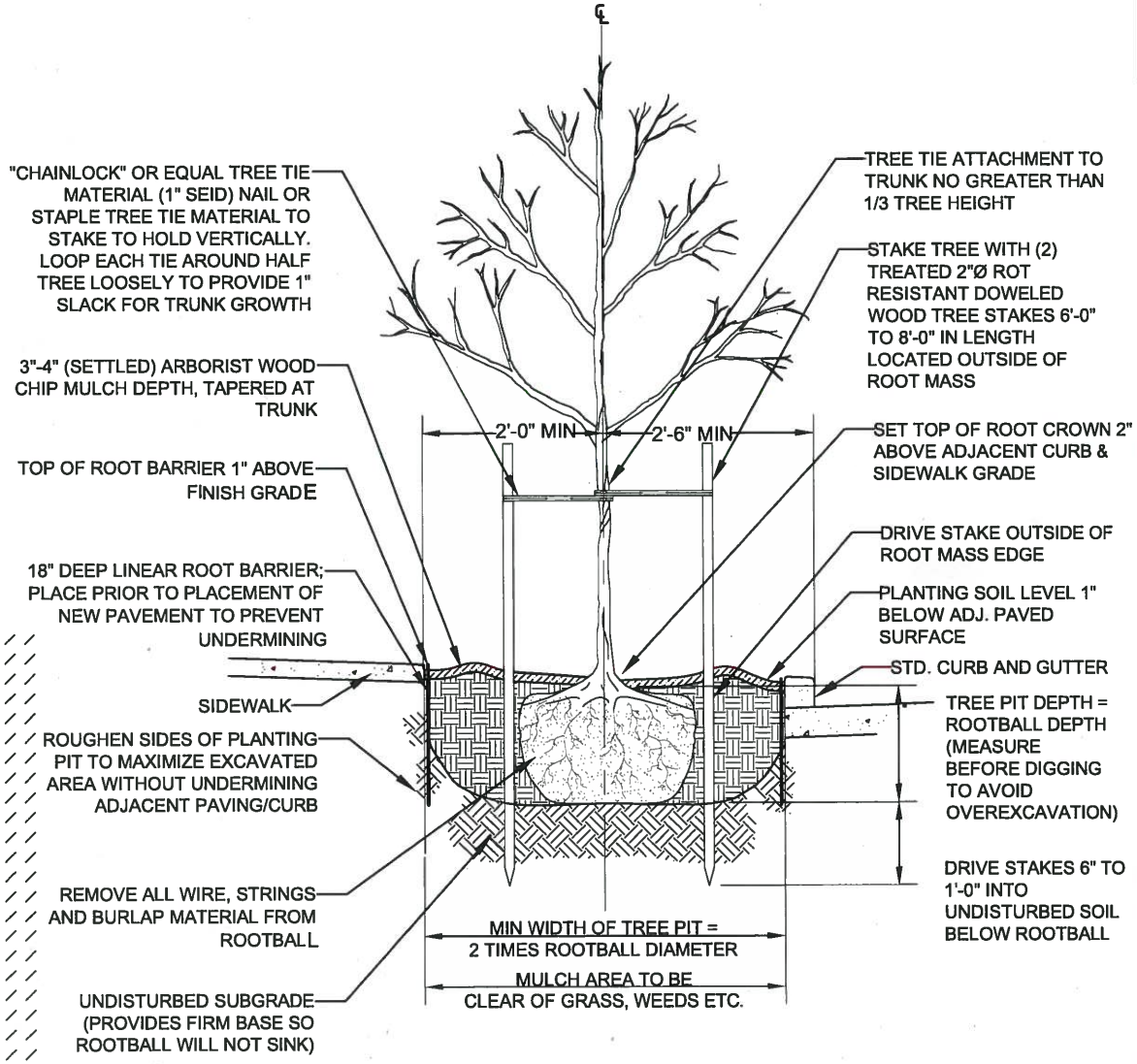

ELEVATION

CITY OF TACOMA **DEPARTMENT OF PUBLIC WORKS**	**APPROVED FOR PUBLICATION** CITY ENGINEER — DATE 2/4/15	**STREET TREE PLANTING** **STANDARD PLAN NO. LS-01**

NOTES:

1. Street trees shall have a trunk free of branches up to the height listed below when planted:
   A. Small trees, whose mature height is 15 to 25 feet, shall have a trunk free of branches up to a minimum of 4 feet.
   B. Conifer/evergreen trees shall have a trunk free of branches up to a minimum of 2 feet.
   C. Trees with ascending branches (examples - Ulmus Americana and Zelkova Serrata) may be branched 1 foot or More below the standard height and still provide proper clearance when planted.
   D. All other trees shall have a trunk free of branches up to a minimum of 6 feet.
2. Street trees shall not be less than 1.5 inches in caliper for broadleaf trees or 6 feet in height for evergreen/conifers.
3. For minimum unpaved planting area dimensions refer to tree well dimension detail, STANDARD PLAN NO. LS-03.
4. The accessible portion of the sidewalk must be a minimum of 5 feet and be free of obstructions.

MINIMUM TREE SETBACKS (AT PLANTING):

Centerline of tree to centerline of:	
Street corner (extension of outside face of curb)	25'-0"
Stop or yield sign	25'-0"
Utility pole	15'-0"
Other traffic control sign	5'-0"
Centerline of tree to edge of:	
Driveway	5'-0"
Face of curb	2'-6"
Pavement	2'-0"
Edge of tree to edge of:	
Utility worker access lids	5'-0"
Gas shutoff valves	5'-0"
Fire hydrant & hydrant branch	10'-0"
Water meter, water service & water mains	5'-0"
Storm inlet, cb, & manhole	5'-0"
Storm/sanitary service connections & mains	5'-0"

MINIMUM TREE CLEARANCES (AT MATURITY):

Lowest branch to surface of:	
Streets	14'-0"
Sidewalks	8'-0"

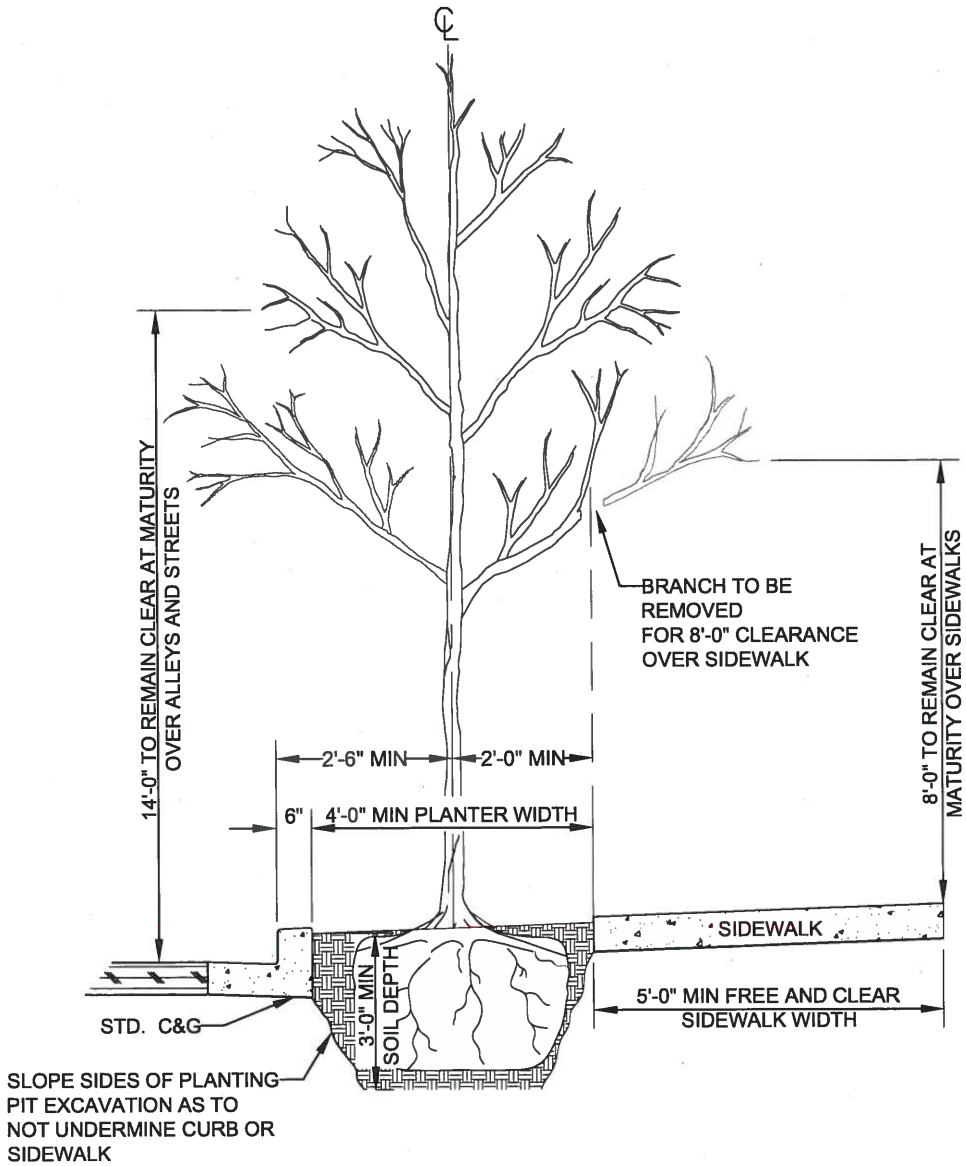

CITY OF TACOMA DEPARTMENT OF PUBLIC WORKS	APPROVED FOR PUBLICATION CITY ENGINEER — DATE 7/6/15	STREET TREE CLEARANCE STANDARD PLAN NO. LS-02

TREE SIZE:

Trees are categorized as small, medium or large based the canopy factor, which takes into account the trees mature height, crown spread and growth ratE. The following formula shall be used to determine the canopy factor:

(MATURE HEIGHT IN FEET) X (MATURE WIDTH IN FEET) X (GROWTH RATE) X (0.01) = CANOPY FACTOR

The growth rate number is 1 for slow growing trees, 2 for moderately growing trees and 3 for fast growing trees.

Tree size categories are as follows:

A. LARGE TREES = Canopy factor greater than 90
B. MEDIUM TREES = Canopy factor from 40-90
C. SMALL TREES = Canopy factor less than 40

SMALL TREES

24 SQUARE FEET MIN
UNPAVED PLANTING AREA

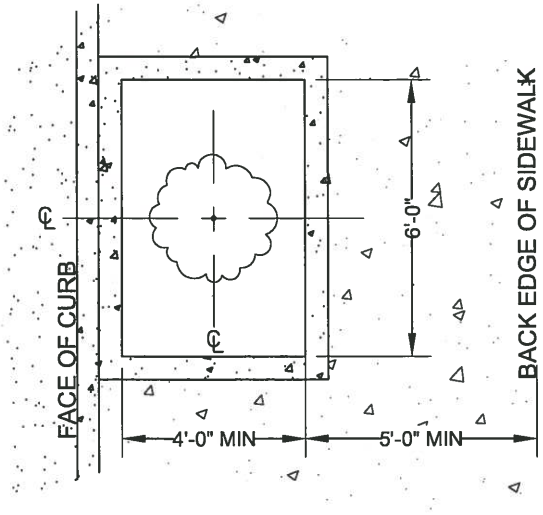

MEDIUM TREES

40 SQUARE FEET MIN
UNPAVED PLANTING AREA

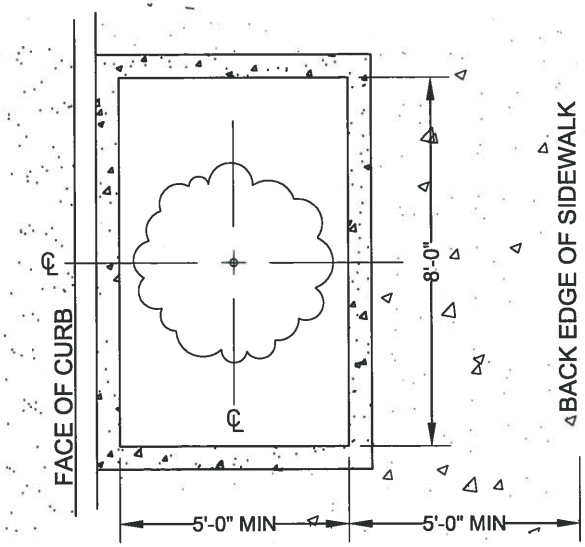

LARGE TREES

60 SQUARE FEET MIN
UNPAVED PLANTING AREA

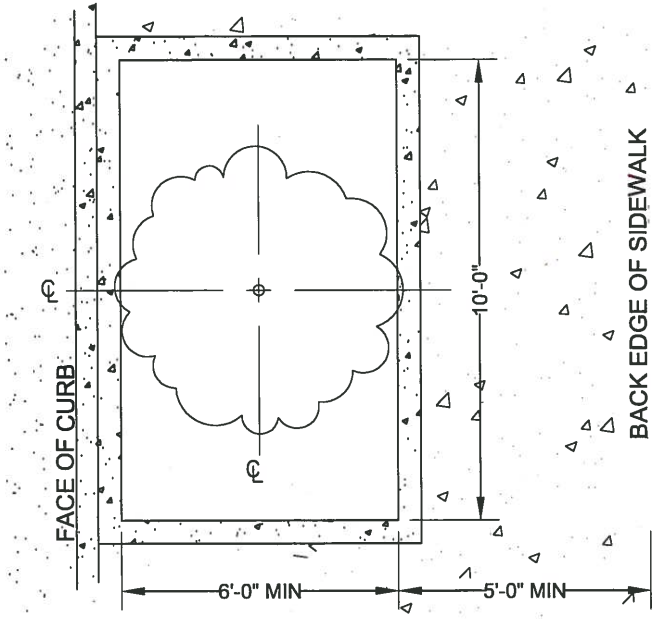

CITY OF TACOMA DEPARTMENT OF PUBLIC WORKS	APPROVED FOR PUBLICATION CITY ENGINEER — DATE 7/6/18	TREE WELL DIMENSION STANDARD PLAN NO. LS-03

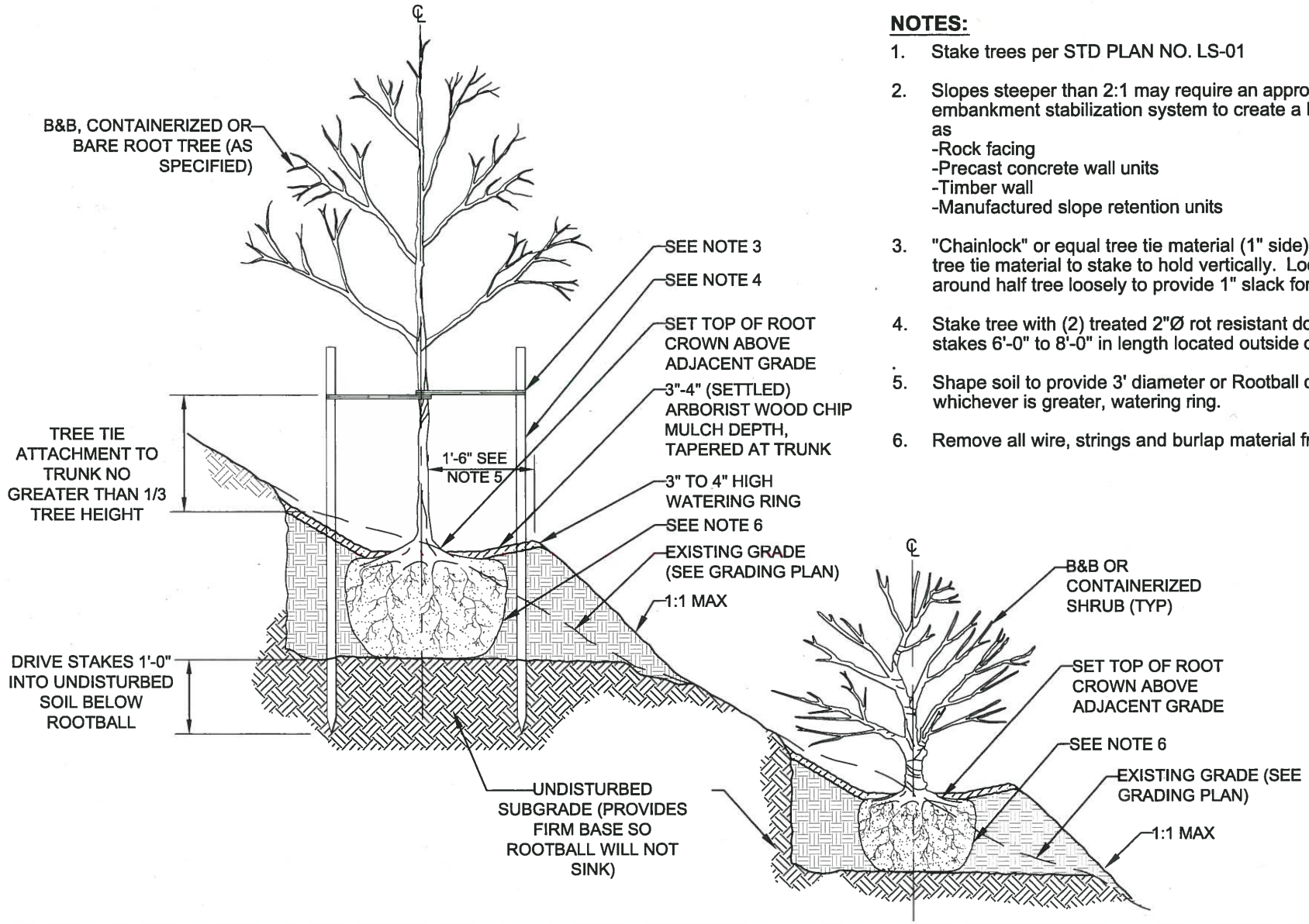

NOTES:

1. Stake trees per STD PLAN NO. LS-01
2. Slopes steeper than 2:1 may require an approves embankment stabilization system to create a level tree pit such as
   -Rock facing
   -Precast concrete wall units
   -Timber wall
   -Manufactured slope retention units
3. "Chainlock" or equal tree tie material (1" side) nail or staple tree tie material to stake to hold vertically. Loop each tie around half tree loosely to provide 1" slack for trunk growth.
4. Stake tree with (2) treated 2"Ø rot resistant doweled wood tree stakes 6'-0" to 8'-0" in length located outside of root mass
5. Shape soil to provide 3' diameter or Rootball diameter, whichever is greater, watering ring.
6. Remove all wire, strings and burlap material from Rootball.

CITY OF TACOMA **DEPARTMENT OF PUBLIC WORKS**	**APPROVED FOR PUBLICATION** CITY ENGINEER — DATE 9/2/16	**TREE & SHRUBS PLANTING ON SLOPES** **STANDARD PLAN NO. LS-04**

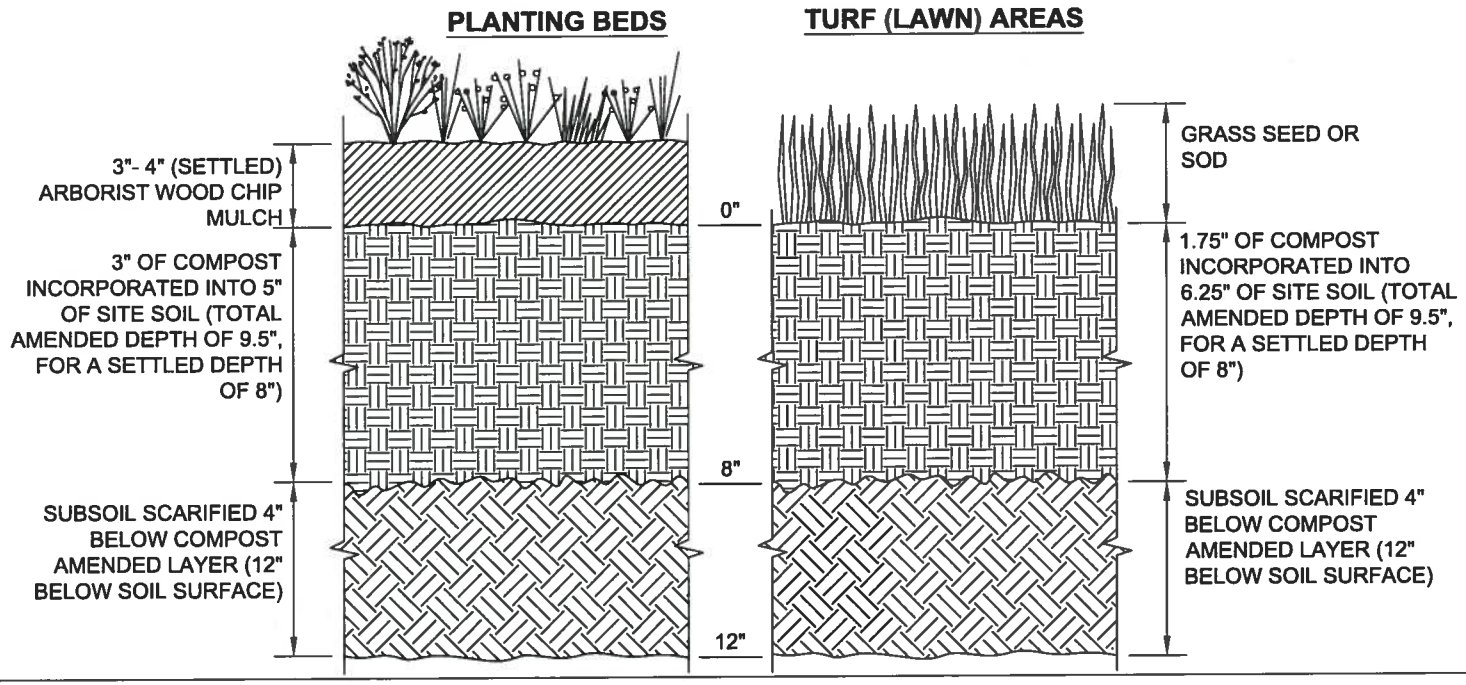

OPTION 2: Amend existing site topsoil, or subsoil, either at preapproved rate or at calculated rate based on tests of the soil and amendments. All soil areas disturbed or compacted during construction, and not covered by buildings or pavement, shall be amended with compost as described below.	
Scarification: Scarify or till subgrade to 8 inches depth (or to depth needed to achieve a total depth of 12 inches of uncompacted soil after calculated amount of amendment is added). Entire surface should be disturbed by scarification. Do not scarify within drip line of existing trees to be retained or where scarification would damage tree roots or as determined by the engineer.	
A. Planting Beds	B. Turf (Lawn) Areas
1. PREAPPROVED RATE: Place 3 inches of composted material and rototill into 5 inches of existing site soils (a total amended depth of about 9.5 inches, for a settled depth of 8 inches).	1. PREAPPROVED RATE: Place 1.75 inches of composted material and rototill into 6.25 inches of existing site soils (a total amended depth of about 9.5 inches, for a settled depth of 8 inches).
2. CALCULATED RATE: Place calculated amount of composted material or approved organic material and rototill into depth of soil needed to achieve 8 inches of settled soil at 10% organic content.	2. CALCULATED RATE: Place calculated amount of composted material or approved organic material and rototill into depth of soil needed to achieve 8 inches of settled soil at 5% organic content.
Rake beds to smooth and remove surface rocks larger than 2 inches diameter. Mulch planting beds with 3" - 4" of organic mulch or stockpiled duff.	Water or roll to compact to 85% of maximum dry density. Rake to level and remove surface rocks larger than 1 inch diameter.
Setbacks: to prevent uneven settling, do not compost-amend soils within 3 feet on center of utility infrastructure (poles, vaults, meters etc.). Within one foot of pavement edge, curbs and sidewalks; soil should be compacted to approximately 90% max. modified proctor density (ASTM D1557) to ensure a firm surface. Do not compact within the tree protection zone. See Std. Plan LS-08 and LS-09.	
See SWMM BMP L613 for additional information.	

REVIEWED BY		APPROVED FOR PUBLICATION	CITY OF TACOMA
DCS PUBLIC WORKS	GY ENVIRONMENTAL SERVICES	CITY ENGINEER — DATE 4/4/10	BMP L613 POST CONSTRUCTION SOIL QUALITY AND DEPTH OPTION 2 - AMEND IN PLACE
NA TACOMA POWER	NA TACOMA WATER		STANDARD PLAN NO. GSI-01b

KURTIS DEAN KINGSOLVER · STATE OF WASHINGTON · 31229 · REGISTERED PROFESSIONAL ENGINEER

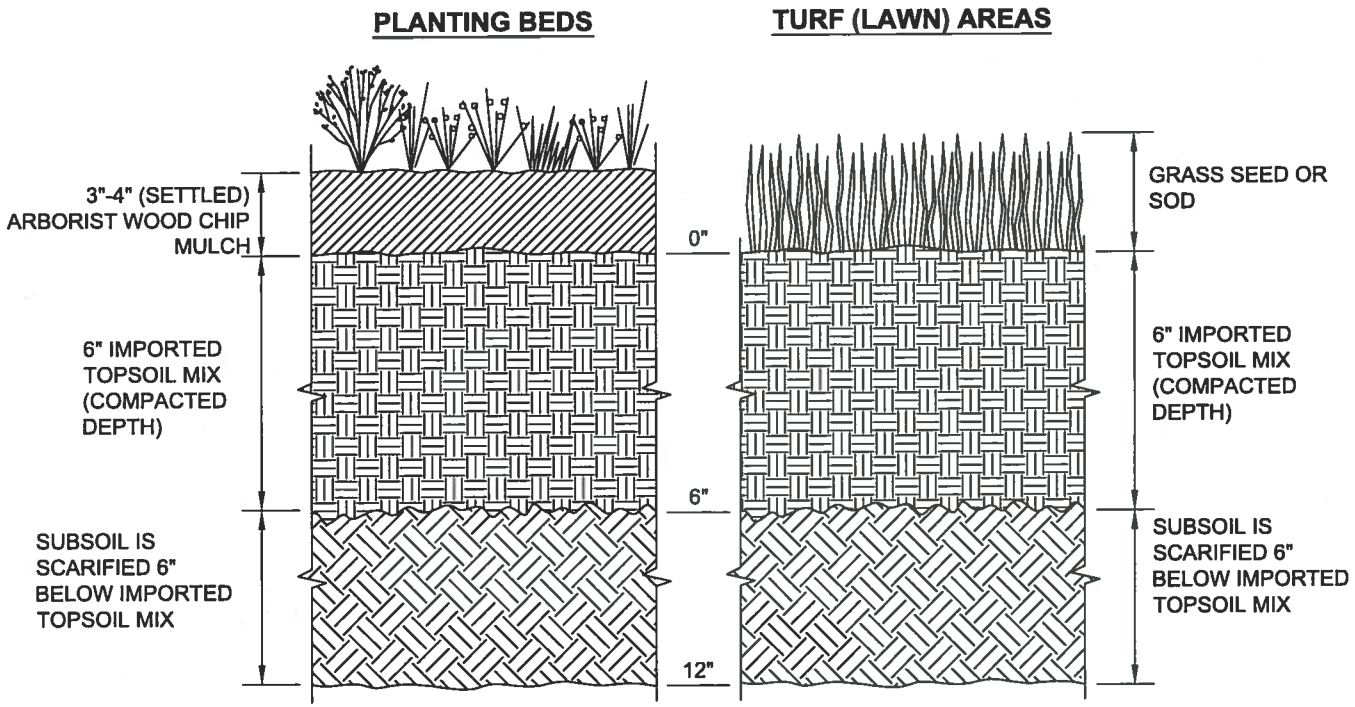

OPTION 4: Import topsoil mix of sufficient organic content and depth to meet the requirements. All soil areas disturbed or compacted during construction, and not covered by buildings or pavement, shall be restored as described below.	
Scarification: scarify or till subgrade in two direction to 6 inches depth. Entire surface shall be disturbed by scarification. Do not scarify within drip line of existing trees to be retained.	
A. Planting Beds	B. Turf (Lawn) Areas
Use imported topsoil mix containing 10% organic matter (typically around 40% compost). Soil portion must be sand or sandy loam as defined by the USDA. Place 3 inches of imported topsoil mix on surface and till into 2 inches of soil. Place 3 inches of imported topsoil mix on surface and till into 2 inches of soil. Place second lift of 3 inches topsoil mix on surface.	Use imported topsoil mix containing 5% organic matter (typically around 25% compost). Soil portion must be sand or sandy loam as defined by the USDA. Place 3 inches of imported topsoil mix on surface and till into 2 inches of soil. Place second lift of 3 inches topsoil mix on surface.
Rake beds to smooth and remove surface rocks larger than 2 inches diameter. Mulch planting beds with 3" - 4" of organic mulch or stockpiled duff.	Water or roll to compact to 85% of maximum dry density. Rake to level and remove surface rocks larger than 1 inch diameter.
Setbacks: to prevent uneven settling, do not compost-amend soils within 3 feet on center of utility infrastructure (poles, vaults, meters etc.). Within one foot of pavement edge, curbs and sidewalks; soil should be compacted to approximately 90% max. modified proctor density (ASTM D1557) to ensure a firm surface. Do not compact within tree protection zone. See Std. Plans LS-08 and LS-09.	
See SWMM BMP L613 for additional information.	

REVIEWED BY		APPROVED FOR PUBLICATION	CITY OF TACOMA
DCS	GMS		BMP L613 POST CONSTRUCTION SOIL QUALITY AND DEPTH
PUBLIC WORKS	ENVIRONMENTAL SERVICES		OPTION 4 - IMPORTED TOPSOIL
NA	NA		
TACOMA POWER	TACOMA WATER	CITY ENGINEER / DATE 4/21/16	STANDARD PLAN NO. GSI-01d

KURTIS DEAN KINGSOLVER STATE OF WASHINGTON 31229 REGISTERED PROFESSIONAL ENGINEER