NOTES:

1. Planting includes removal of stakes one year after installation.
2. Shape soil surface to provide 4' dia watering ring.
3. Tree clearance shall be per STD PLAN LS-02.
4. See STD PLAN LS-03 for tree well dimension detail.
5. Root barriers shall be an injection molded or extruded modular component made of high density polypropylene or polyethylene plastic. 18" depth x 10' length root barrier is required along edge of roadways, curbs, driveways, trails, sidewalks, or other structures where root ball is within 4 feet. install root barrier for newly planted trees only.

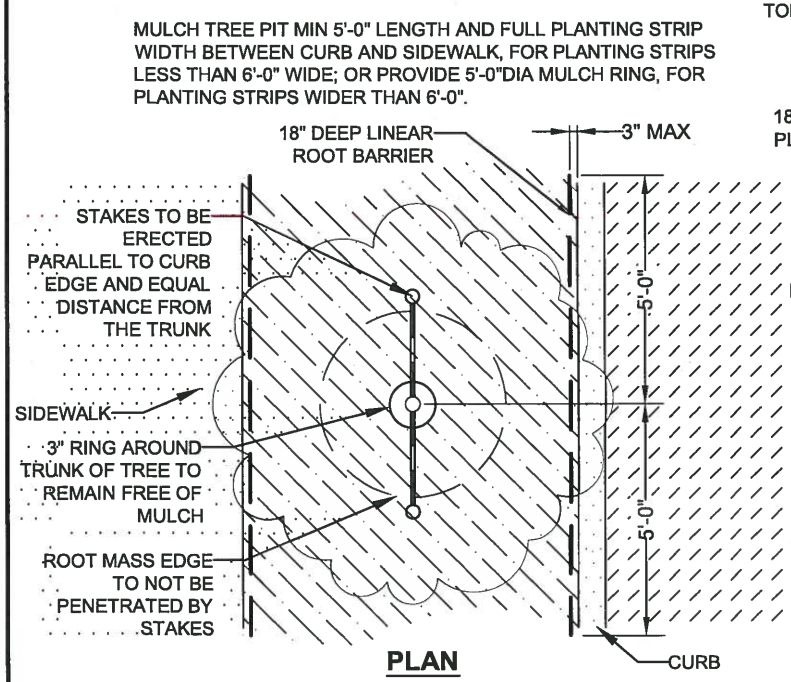

PLAN

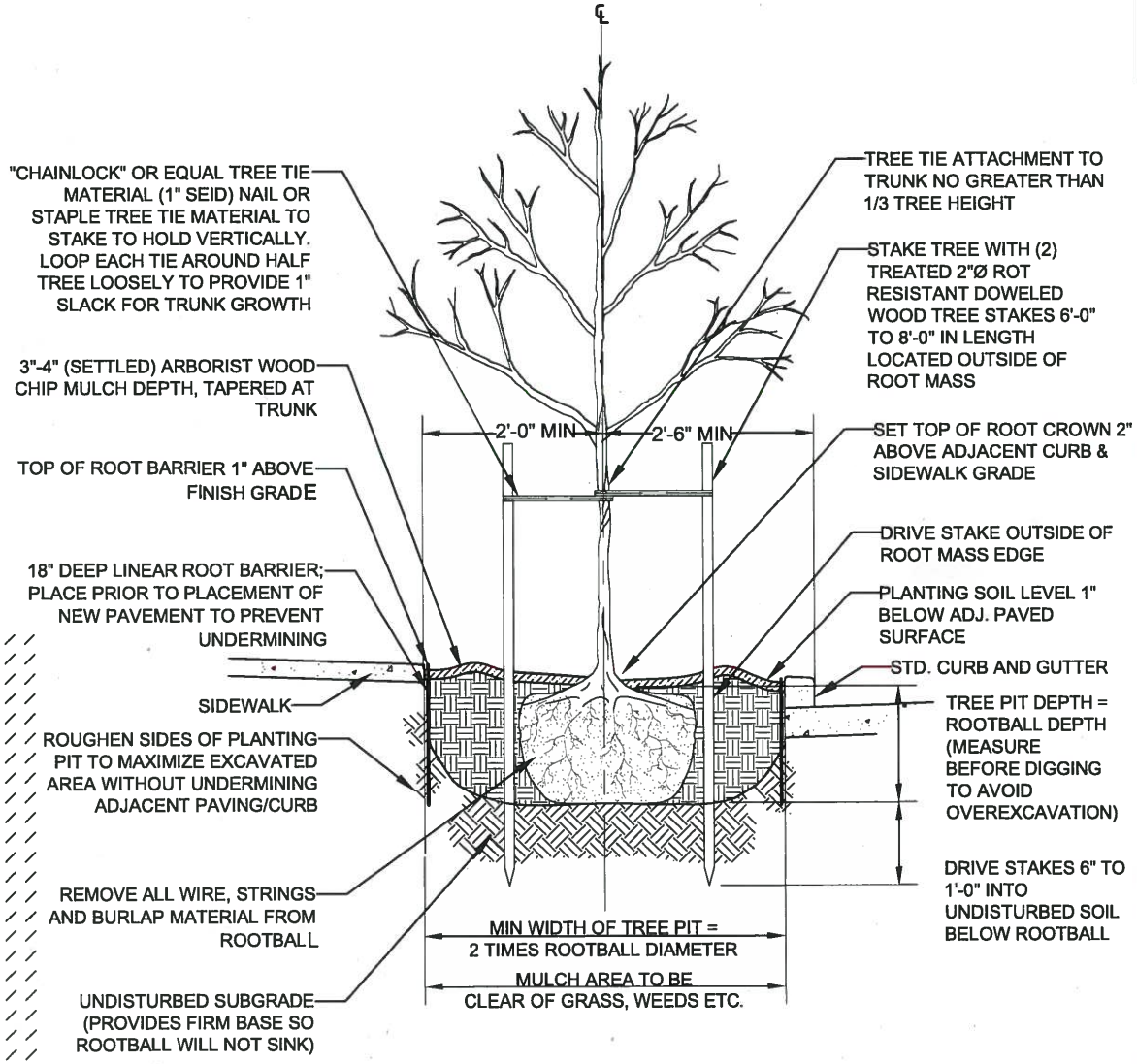

ELEVATION

CITY OF TACOMA **DEPARTMENT OF PUBLIC WORKS**	**APPROVED FOR PUBLICATION** CITY ENGINEER — DATE 2/4/15	**STREET TREE PLANTING** **STANDARD PLAN NO. LS-01**

NOTES:

1. Street trees shall have a trunk free of branches up to the height listed below when planted:
   A. Small trees, whose mature height is 15 to 25 feet, shall have a trunk free of branches up to a minimum of 4 feet.
   B. Conifer/evergreen trees shall have a trunk free of branches up to a minimum of 2 feet.
   C. Trees with ascending branches (examples - Ulmus Americana and Zelkova Serrata) may be branched 1 foot or More below the standard height and still provide proper clearance when planted.
   D. All other trees shall have a trunk free of branches up to a minimum of 6 feet.
2. Street trees shall not be less than 1.5 inches in caliper for broadleaf trees or 6 feet in height for evergreen/conifers.
3. For minimum unpaved planting area dimensions refer to tree well dimension detail, STANDARD PLAN NO. LS-03.
4. The accessible portion of the sidewalk must be a minimum of 5 feet and be free of obstructions.

MINIMUM TREE SETBACKS (AT PLANTING):

Centerline of tree to centerline of:	
Street corner (extension of outside face of curb)	25'-0"
Stop or yield sign	25'-0"
Utility pole	15'-0"
Other traffic control sign	5'-0"
Centerline of tree to edge of:	
Driveway	5'-0"
Face of curb	2'-6"
Pavement	2'-0"
Edge of tree to edge of:	
Utility worker access lids	5'-0"
Gas shutoff valves	5'-0"
Fire hydrant & hydrant branch	10'-0"
Water meter, water service & water mains	5'-0"
Storm inlet, cb, & manhole	5'-0"
Storm/sanitary service connections & mains	5'-0"

MINIMUM TREE CLEARANCES (AT MATURITY):

Lowest branch to surface of:	
Streets	14'-0"
Sidewalks	8'-0"

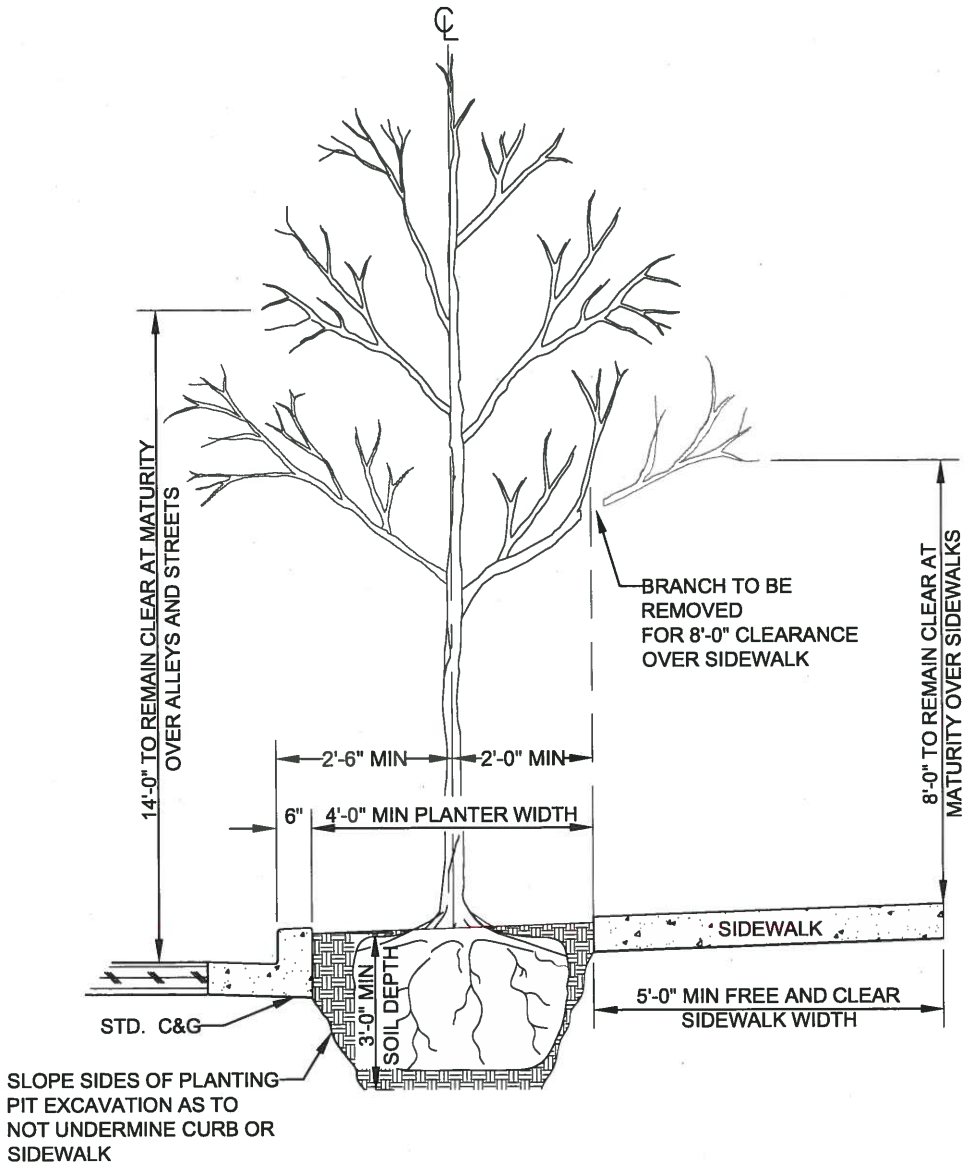

CITY OF TACOMA DEPARTMENT OF PUBLIC WORKS	APPROVED FOR PUBLICATION CITY ENGINEER — DATE 7/6/15	STREET TREE CLEARANCE STANDARD PLAN NO. LS-02

TREE SIZE:

Trees are categorized as small, medium or large based the canopy factor, which takes into account the trees mature height, crown spread and growth ratE. The following formula shall be used to determine the canopy factor:

(MATURE HEIGHT IN FEET) X (MATURE WIDTH IN FEET) X (GROWTH RATE) X (0.01) = CANOPY FACTOR

The growth rate number is 1 for slow growing trees, 2 for moderately growing trees and 3 for fast growing trees.

Tree size categories are as follows:

A. LARGE TREES = Canopy factor greater than 90
B. MEDIUM TREES = Canopy factor from 40-90
C. SMALL TREES = Canopy factor less than 40

SMALL TREES

24 SQUARE FEET MIN
UNPAVED PLANTING AREA

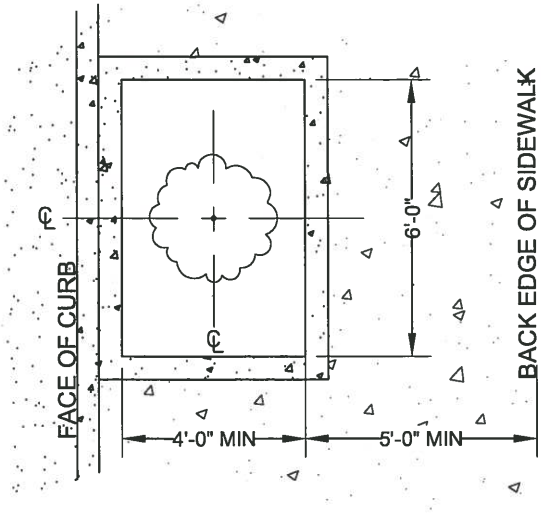

MEDIUM TREES

40 SQUARE FEET MIN
UNPAVED PLANTING AREA

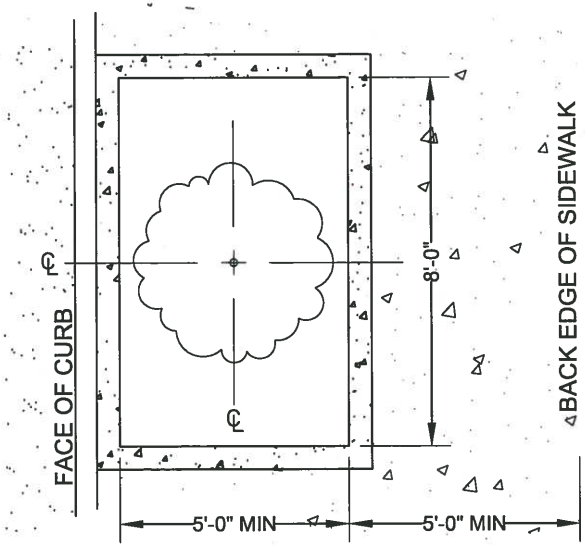

LARGE TREES

60 SQUARE FEET MIN
UNPAVED PLANTING AREA

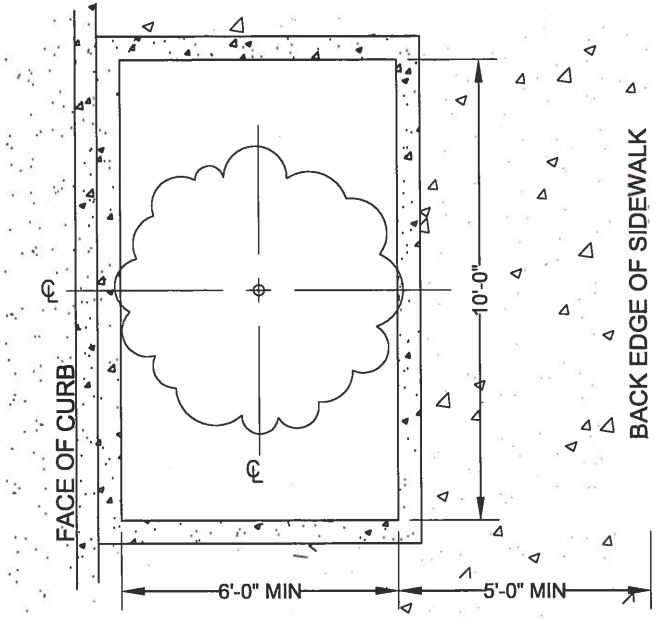

CITY OF TACOMA DEPARTMENT OF PUBLIC WORKS	APPROVED FOR PUBLICATION CITY ENGINEER — DATE 7/6/18	TREE WELL DIMENSION STANDARD PLAN NO. LS-03

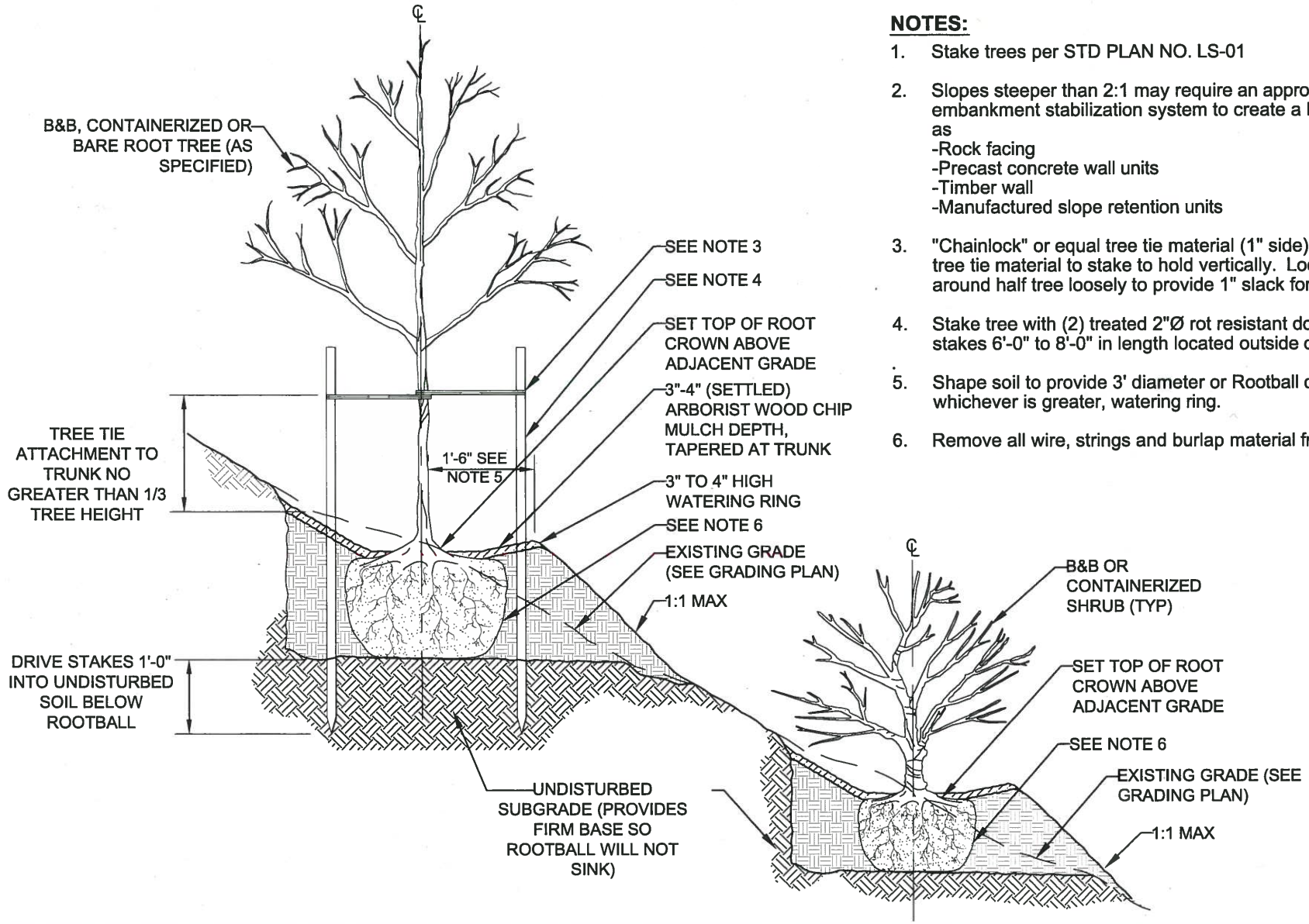

NOTES:

1. Stake trees per STD PLAN NO. LS-01
2. Slopes steeper than 2:1 may require an approves embankment stabilization system to create a level tree pit such as
   -Rock facing
   -Precast concrete wall units
   -Timber wall
   -Manufactured slope retention units
3. "Chainlock" or equal tree tie material (1" side) nail or staple tree tie material to stake to hold vertically. Loop each tie around half tree loosely to provide 1" slack for trunk growth.
4. Stake tree with (2) treated 2"Ø rot resistant doweled wood tree stakes 6'-0" to 8'-0" in length located outside of root mass
5. Shape soil to provide 3' diameter or Rootball diameter, whichever is greater, watering ring.
6. Remove all wire, strings and burlap material from Rootball.

CITY OF TACOMA **DEPARTMENT OF PUBLIC WORKS**	**APPROVED FOR PUBLICATION** CITY ENGINEER — DATE 9/2/16	**TREE & SHRUBS PLANTING ON SLOPES** **STANDARD PLAN NO. LS-04**

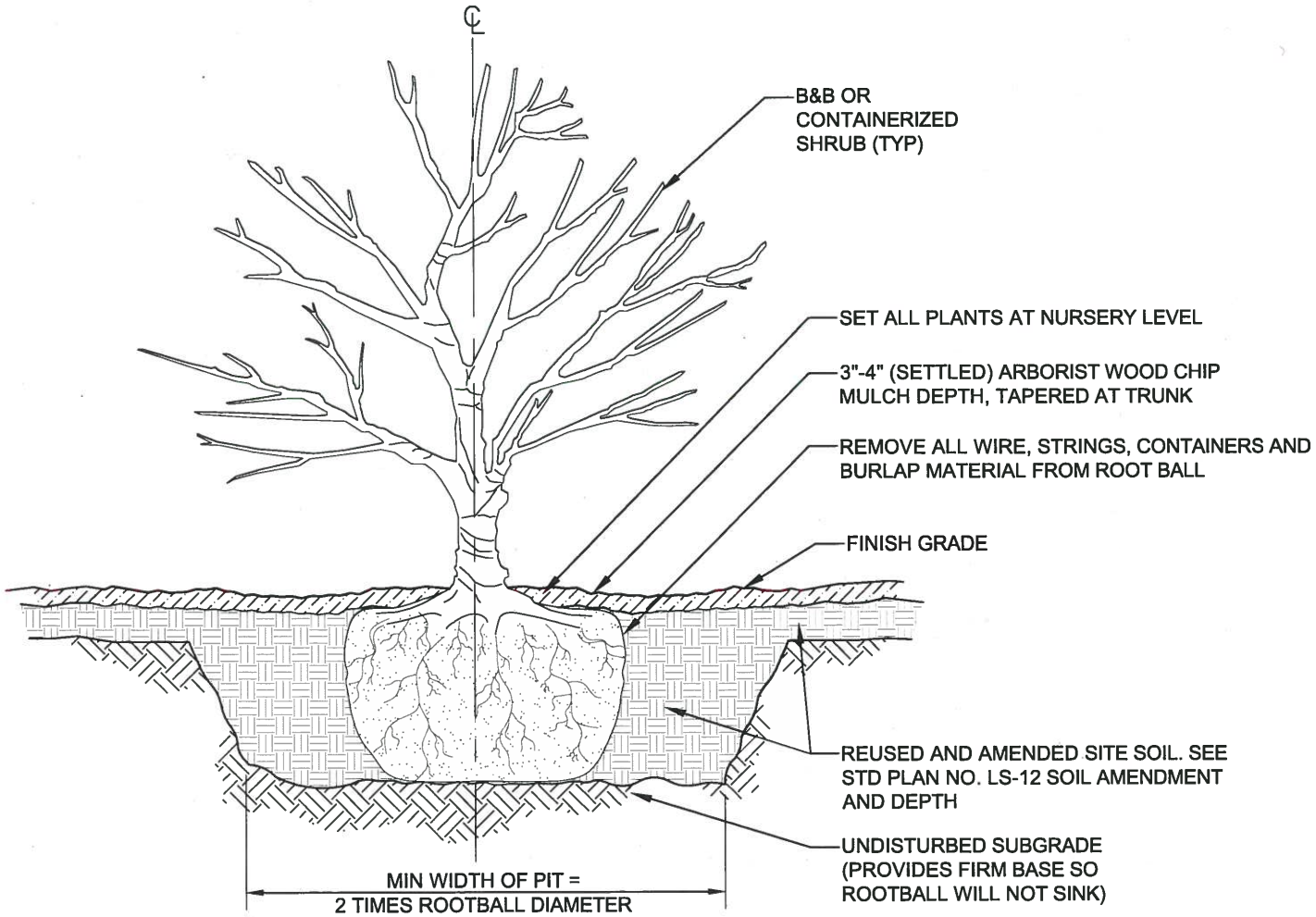

CITY OF TACOMA DEPARTMENT OF PUBLIC WORKS	APPROVED FOR PUBLICATION CITY ENGINEER — DATE 7/8/15	SHRUB PLANTING STANDARD PLAN NO. LS-05

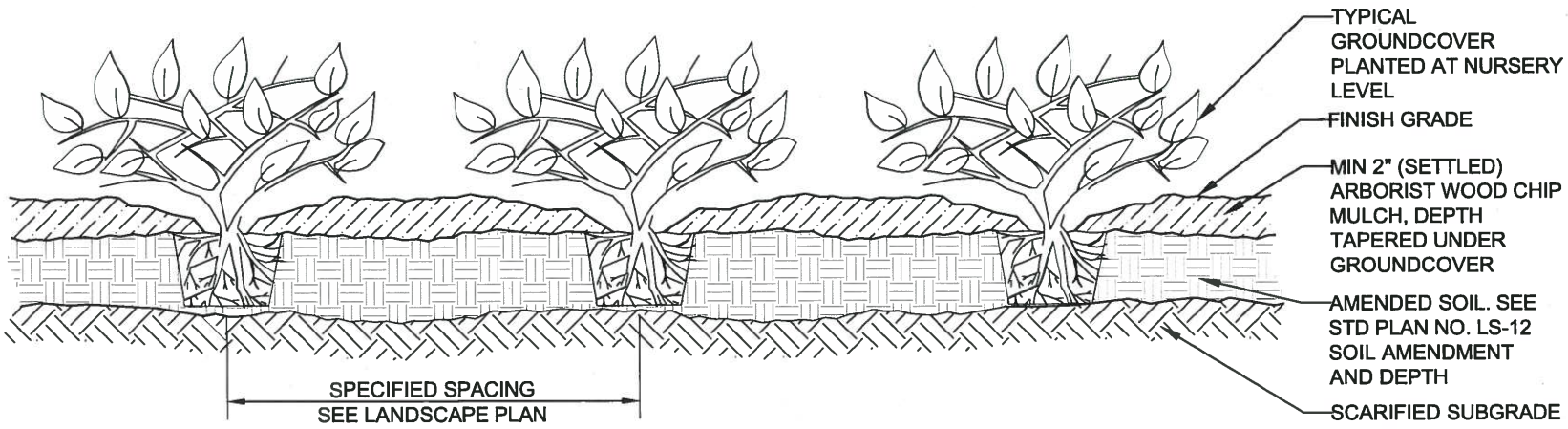

ELEVATION

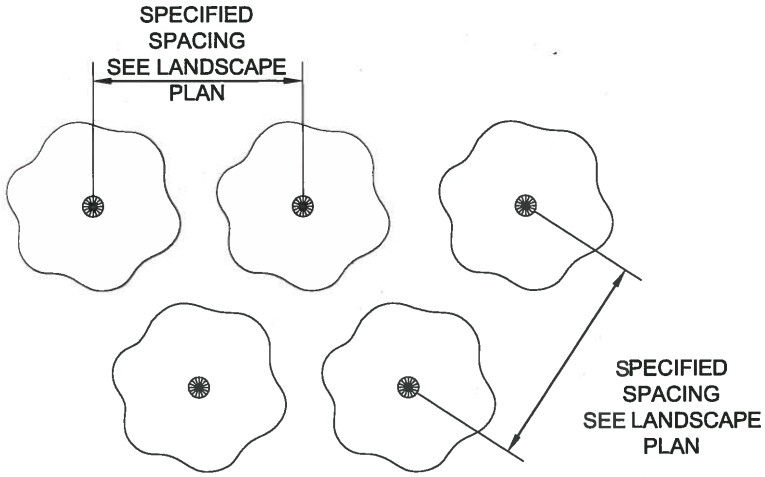

PLAN

PLANT SPACING (INCHES)	PLANTS NEEDED TO FILL 100 SF
6	460
8	260
10	167
12	115
18	51
24	29
30	19
36	13
48	7

TYPICAL PLANT QUANTITY NEEDED TO FILL 100 SF

CITY OF TACOMA DEPARTMENT OF PUBLIC WORKS	APPROVED FOR PUBLICATION CITY ENGINEER — DATE 7/6/16	GROUNDCOVER PLANTING STANDARD PLAN NO. LS-06

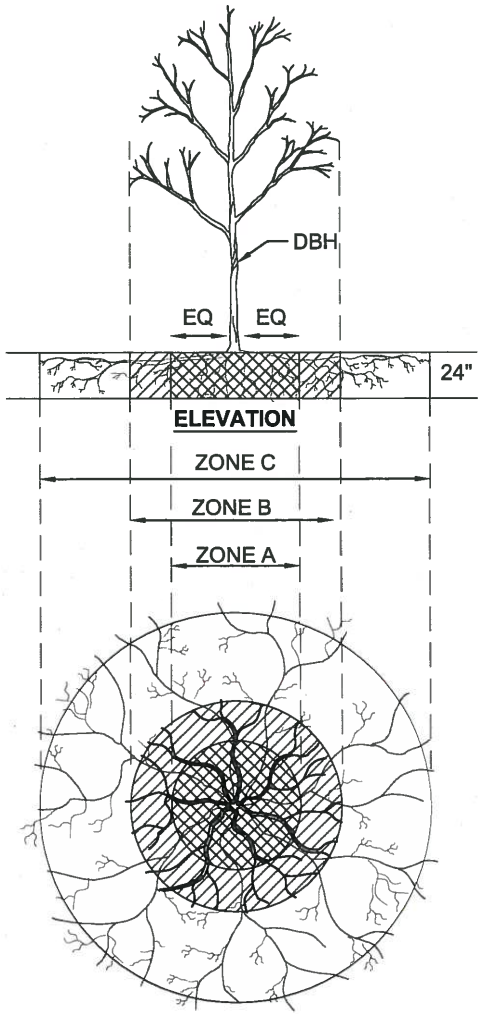

ZONE A (CRITICAL ROOT ZONE)

The Critical Root Zone is the area under a tree measuring 1 foot of radius per 1 inch of diameter at breast height (DBH) from the trunk outwards and 24 inches in depth. For example: for a 10 inch dbh tree, the Critical Root Zone is located at least 10 feet out from the trunk and 24 inches deep.

RESTRICTIONS

1. No disturbance allowed without site-specific inspection and approval of methods to minimize root damage.
2. If roots larger than 2" IN DIA. are encountered, inspection and approval is required before proceeding trenching/excavation work.
3. Tunneling is required to install lines 3'-0" below grade or deeper.

ZONE C (FEEDER ROOT ZONE)

The Feeder Root Zone is the area under a tree measuring 2 feet of radius per 1 inch of DBH from the trunk outwards and 24 inches in depth. For example: for a ten inch diameter tree, The Critical Root Zone is located at least 20 feet out from the trunk and 24 inches deep.

RESTRICTIONS

1. Operation of heavy equipment and/or stockpiling of materials subject to approval. *Surface protection measures required
2. Trenching permitted as follows:
   -excavation by hand or WITH hand-driven trencher maybe required
   -Minimize trench width to the extent possible
   -Maintain 2/3 or more of ZONE C in an undisturbed condition

ZONE B (DRIP LINE)

The Drip Line is the area below the tree in which the boundary is designated by the edge of the tree's crown.

RESTRICTIONS

1. Operation of heavy equipment and/or stockpiling of materials subject to approval. *Surface protection measures required
2. Trenching permitted as follows:
   -Excavation by hand or with a hand-driven trencher may be required
   -Minimize trench width to the extent possible
   -No disturbance permitted within ZONE A
   -Maintain 2/3 or more of zone b in an undisturbed condition
3. Tunneling may be required for trenches deeper than 3'-0"

*SURFACE PROTECTION MEASURES

1. Wood chip mulch layer, 6"-12" depth; or
2. 4" wood chip mulch layer under 3/4" plywood; or
3. 4" gravel over staked geotextile fabric
4. 4" wood chip mulch layer under steel plates;
5. 4" wood chip mulch layer under logging road mats

CITY OF TACOMA DEPARTMENT OF PUBLIC WORKS	APPROVED FOR PUBLICATION CITY ENGINEER — DATE 7/4/16	TREE PROTECTION DURING CONSTRUCTION STANDARD PLAN NO. LS-08

TREE PROTECTION ZONE (TPZ)

The Tree Protection Zone is an arborist defined area surrounding the trunk intended to protect the roots and soil to ensure future tree health and safety.

The location of the Tree Protection Zone is at the edge of the Critical
Root Zone OR Drip Line, whichever is greater, or area as defined by the projects arborist.

For Critical Root Zone and Drip Line measurements see TREE PROTECTION DURING CONSTRUCTION STANDARD PLAN NO. LS-08.

TREE PROTECTION FENCING

1. Erect readily visible six-foot (6'-0") high chain link fencing at the edge of the Tree Protection Zone, and at the boundary of any open space tracts or conservation easements that abut the construction site except where, due to space restrictions, a specific distance is specified by the project's arborist.
2. Fencing shall be secured 6 foot metal posts with movable footings located above ground. metal posts shall not be more than 10 feet apart.
3. Fencing shall be flush with the initial undisturbed grade.
4. Signs shall be attached to the fencing stating that the tree is designated for protection and the area inside the fencing is a TPZ, which is not to be disturbed unless prior approval has been obtained from the city and/or the project's arborist.
5. Maintain the fencing in place until the city authorizes removal or a final certificate of occupancy is issued, whichever occurs first.
6. Ensure that any landscaping done in the TPZ, subsequent to the removal of the fencing, shall be accomplished with light machinery or hand labor.
7. No construction activity shall occur within the TPZ, including but not limited to:
   -Dumping or storage of materials such as building supplies, soil, waste items, and
   -storage of vehicles or equipment

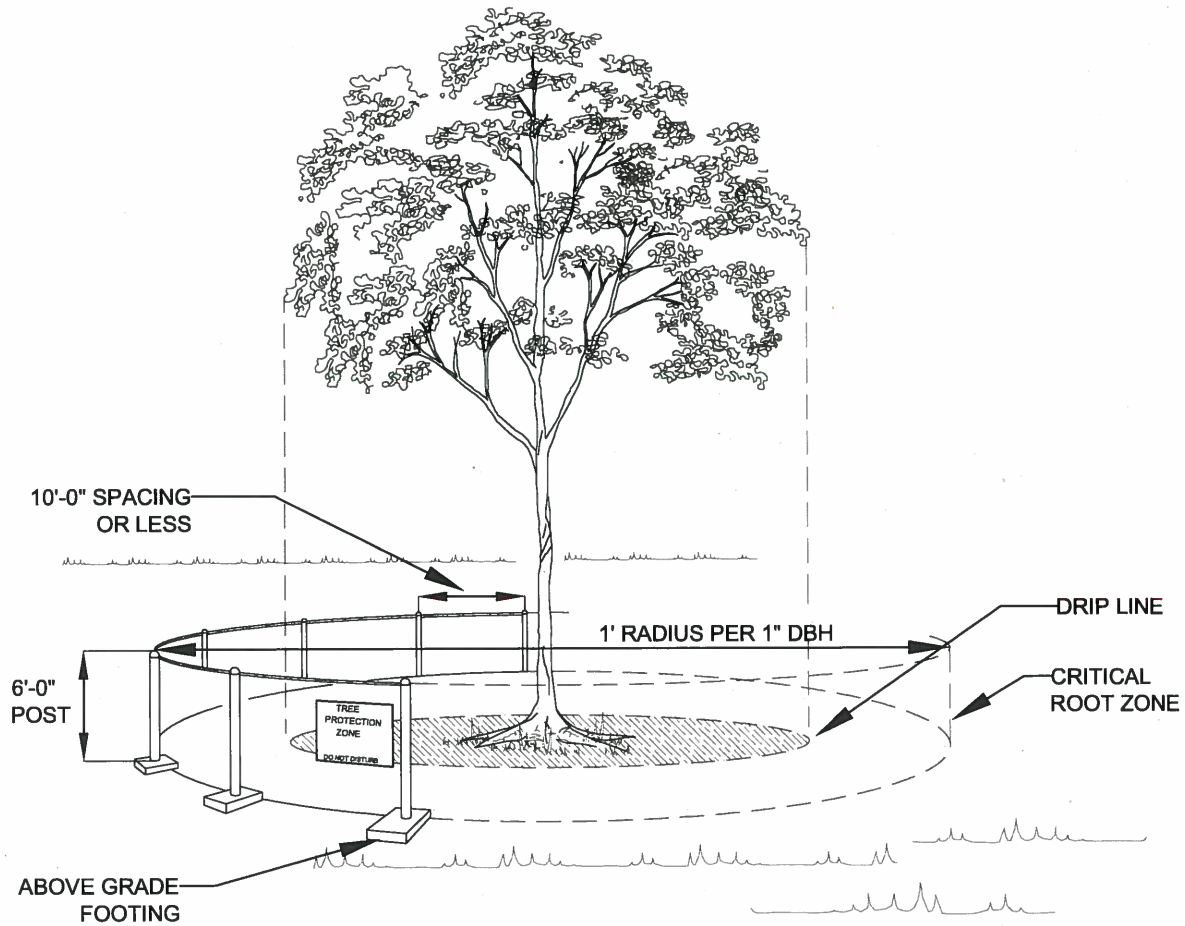

CITY OF TACOMA DEPARTMENT OF PUBLIC WORKS	APPROVED FOR PUBLICATION CITY ENGINEER — DATE 7/8/15	TREE PROTECTION DURING CONSTRUCTION STANDARD PLAN NO. LS-09

NOTES:

1. Tree protection requirements included in this standard detail are for trees which are directly adjacent to paved surfaces which will be retained through construction.
2. Required protection measures for trees other than those in tree wells and planting strips are contained in the TYPICAL TREE PROTECTION FENCING STANDARD PLAN NO. LS-09.
3. Reusable temporary tree and landscape protection fencing can be substituted for chain link fencing in tree wells and planting strips (SEE REUSABLE TREE PROTECTION FENCING FOR PAVED AREAS STANDARD PLAN NO. LS-11).
4. Consider traffic turning visibility and pedestrian visibility when selecting fence height; typically shorter fencing around tree pits between sidewalk and roadway is desired.

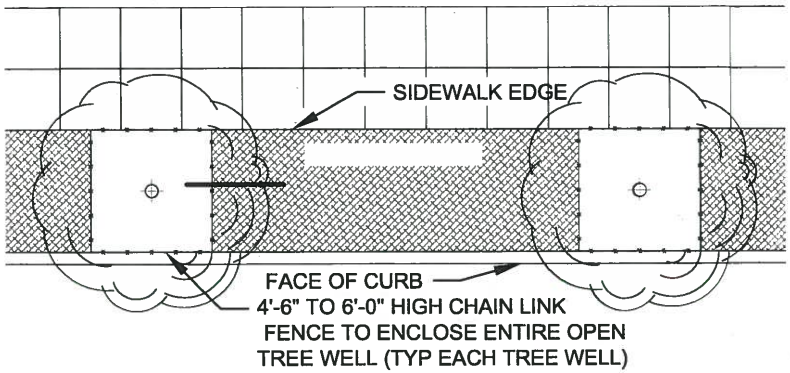

TREE IN PLANTING STRIP-OPTION 1

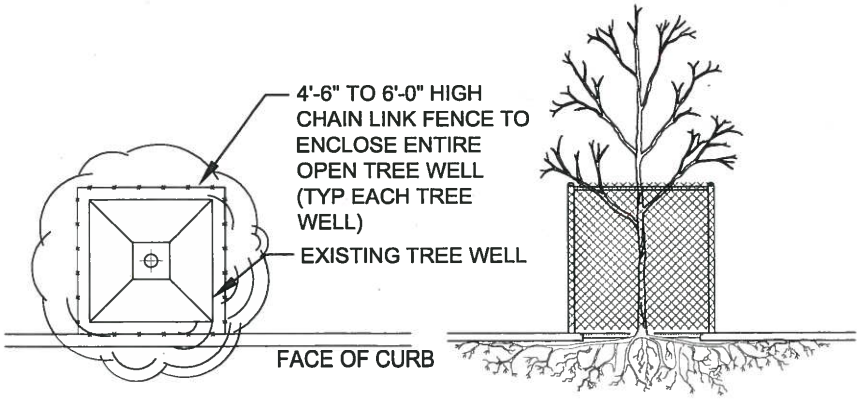

TREE IN TREE WELL

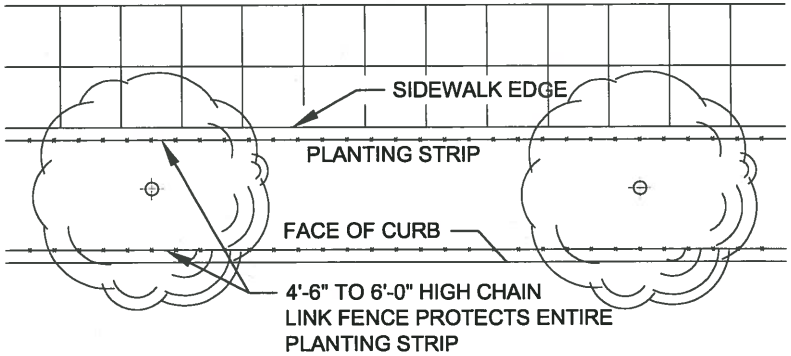

TREE IN PLANTING STRIP-OPTION 2

CITY OF TACOMA **DEPARTMENT OF PUBLIC WORKS**	**APPROVED FOR PUBLICATION** CITY ENGINEER — DATE 7/6/16	**TREE PROTECTION FENCING FOR TREES IN PAVED AREAS** **STANDARD PLAN NO. LS-10**

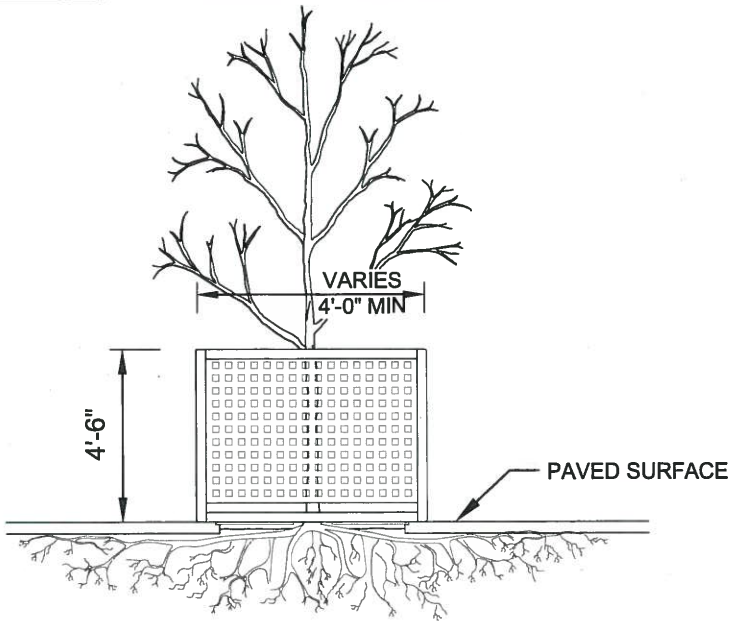

TYPICAL TREE GUARD RAIL

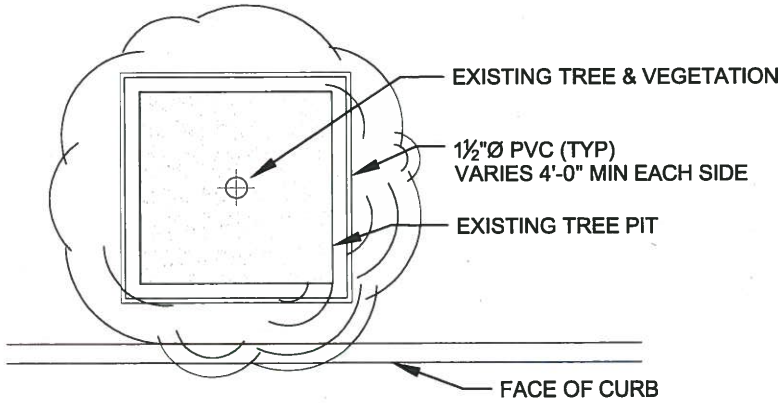

PLAN VIEW

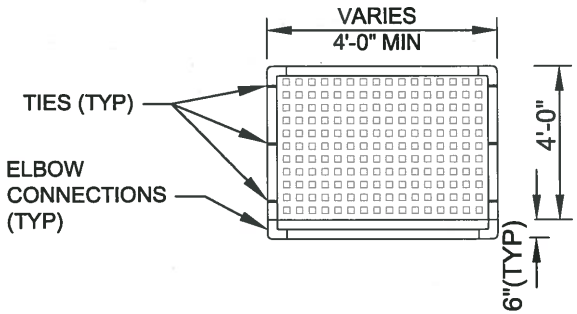

TYPICAL PANEL

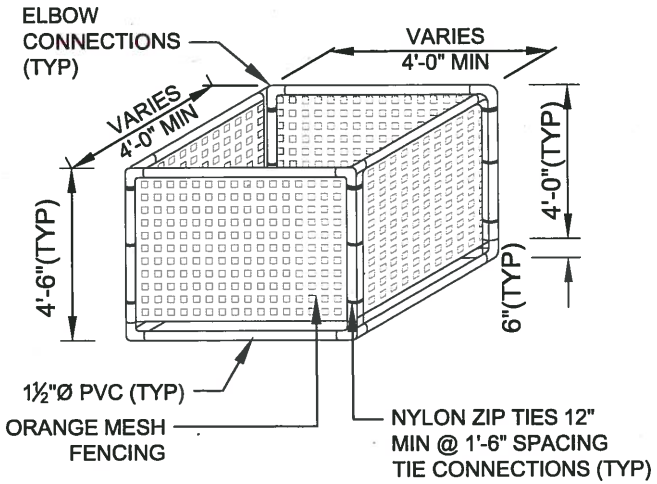

CITY OF TACOMA **DEPARTMENT OF PUBLIC WORKS**	**APPROVED FOR PUBLICATION** CITY ENGINEER — DATE 7/6/15	**REUSABLE TREE PROTECTION FENCING FOR PAVED AREAS** **STANDARD PLAN NO. LS-11**

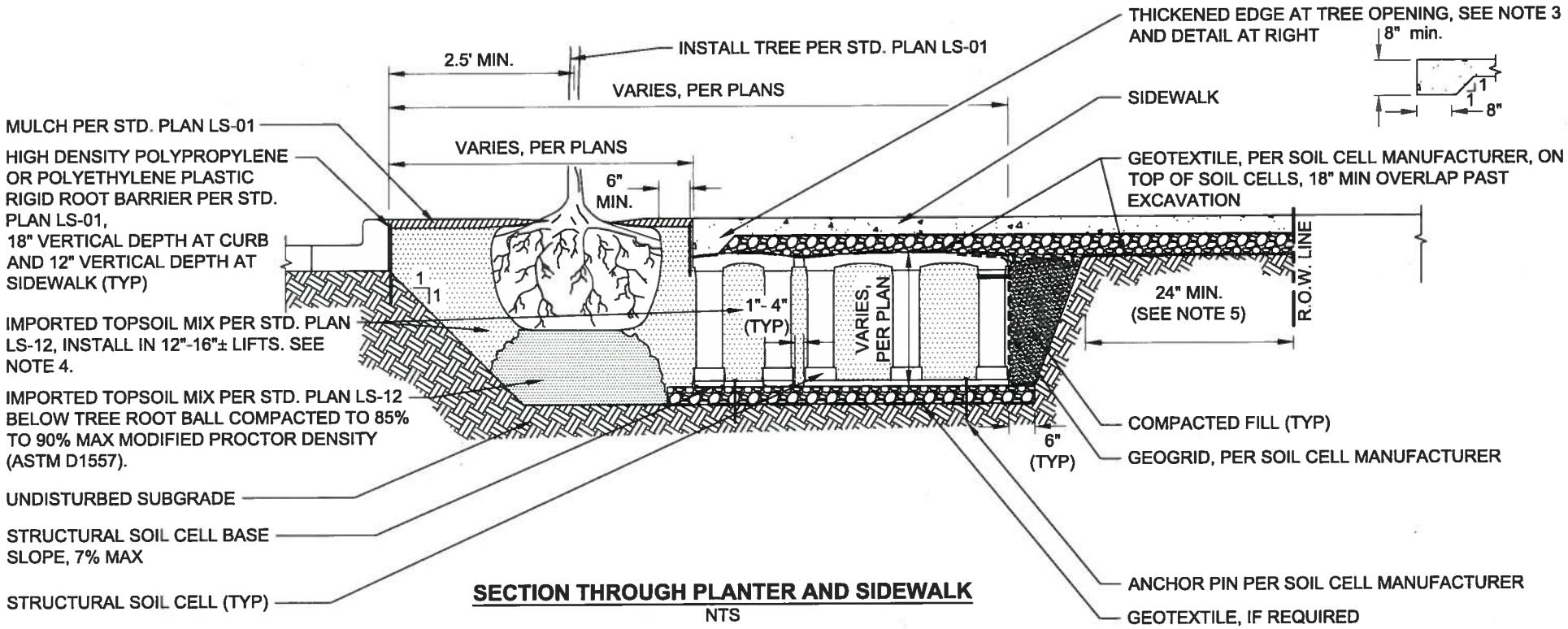

SECTION THROUGH PLANTER AND SIDEWALK
NTS

NOTES:

1. Install soil cells per manufacturer's requirements.
2. Tree shall have minimum soil volume required per TMC 13.06.502.
3. Sidewalk thickened edge required where soil cells are adjacent to planting areas. Sidewalk thickened edge shall extend to soil cell deck.
4. Structural bedding may be required per soil cell manufacturer or geotechnical professional.
5. Designer to review adjacent soil, topography, structures and other adjacent conditions for excavation setback requirements.

REVIEWED BY			APPROVED FOR PUBLICATION	CITY OF TACOMA
DCS		KURTIS DEAN KINGSOLVER, STATE OF WASHINGTON, 31229, REGISTERED PROFESSIONAL ENGINEER	4/4/16	STRUCTURAL SOIL CELLS SECTION
PUBLIC WORKS	ENVIRONMENTAL SERVICES		CITY ENGINEER / DATE	STANDARD PLAN NO. LS-13
NA	NA			
TACOMA POWER	TACOMA WATER			